This is a digital copy of a book that was preserved for generations on library shelves before it was carefully scanned by Google as part of a project to make the world's books discoverable online.

It has survived long enough for the copyright to expire and the book to enter the public domain. A public domain book is one that was never subject to copyright or whose legal copyright term has expired. Whether a book is in the public domain may vary country to country. Public domain books are our gateways to the past, representing a wealth of history, culture and knowledge that's often difficult to discover.

Marks, notations and other marginalia present in the original volume will appear in this file - a reminder of this book's long journey from the publisher to a library and finally to you.

Usage guidelines

Google is proud to partner with libraries to digitize public domain materials and make them widely accessible. Public domain books belong to the public and we are merely their custodians. Nevertheless, this work is expensive, so in order to keep providing this resource, we have taken steps to prevent abuse by commercial parties, including placing technical restrictions on automated querying.

We also ask that you:

+ *Make non-commercial use of the files* We designed Google Book Search for use by individuals, and we request that you use these files for personal, non-commercial purposes.
+ *Refrain from automated querying* Do not send automated queries of any sort to Google's system: If you are conducting research on machine translation, optical character recognition or other areas where access to a large amount of text is helpful, please contact us. We encourage the use of public domain materials for these purposes and may be able to help.
+ *Maintain attribution* The Google "watermark" you see on each file is essential for informing people about this project and helping them find additional materials through Google Book Search. Please do not remove it.
+ *Keep it legal* Whatever your use, remember that you are responsible for ensuring that what you are doing is legal. Do not assume that just because we believe a book is in the public domain for users in the United States, that the work is also in the public domain for users in other countries. Whether a book is still in copyright varies from country to country, and we can't offer guidance on whether any specific use of any specific book is allowed. Please do not assume that a book's appearance in Google Book Search means it can be used in any manner anywhere in the world. Copyright infringement liability can be quite severe.

About Google Book Search

Google's mission is to organize the world's information and to make it universally accessible and useful. Google Book Search helps readers discover the world's books while helping authors and publishers reach new audiences. You can search through the full text of this book on the web at `http://books.google.com/`

aries
7 773

1226

EXECUTIVE DOCUMENTS

PRINTED BY ORDER OF

THE HOUSE OF REPRESENTATIVES

LIBRARY HOUSE OF REPRESENTATIVES

DURING THE

SECOND SESSION OF THE THIRTY-EIGHTH CONGRESS,

1864--'65.

IN FIFTEEN VOLUMES.

Volume 1	No. 1.	Diplomatic.
Volume 2	No. 1.	Diplomatic.
Volume 3	No. 1.	Diplomatic.
Volume 4	No. 1.	Diplomatic.
Volume 5	No. 1.	Interior and Postmaster General.
Volume 6	No. 1.	Navy.
Volume 7	Nos. 2 and 3.	
Volume 8	Nos. 4 to 50, except 15.	
Volume 9	No. 15, (quarto.)	
Volume 10	No. 51.	
Volume 11	No. 60.	
Volume 12	No. 68.	
Volume 13	Nos. 52 to 82, except 60, 68.	
Volume 14	Nos. 83 to 85.	
Volume 15	Commerce and Navigation.	

WASHINGTON:
GOVERNMENT PRINTING OFFICE.
1865.

LIBRARY
Leland Stanford, Jr.
UNIVERSITY

INDEX

TO

THE EXECUTIVE DOCUMENTS

OF THE

HOUSE OF REPRESENTATIVES OF THE UNITED STATES,

OF THE

SECOND SESSION OF THE THIRTY-EIGHTH CONGRESS.

Title.	Vol.	No.	Page.
A.			
Academy, Military, for the year ending June 30, 1866. Estimates for appropriations for the support of the	7	2	72
Academy of Sciences, National. Letter from the President of the	13	66	
Adjutant General of the United States. Annual report of the	14	83	15
Adjutant General, transmitting estimates for appropriations for the support of the Adjutant General's department for the year ending June 30, 1866. Letter from the	7	2	31
Agriculture, Department of, for the year ending June 30, 1866. Estimates for the support of the	7	2	42
Agriculture. Report of the Commissioner of	11	68	
American seamen. Letter from the Secretary of State relative to relief and protection of	8	8	
Appropriations required to complete the service for the fiscal year ending June 30, 1865. Letter from the Secretary of the Treasury transmitting estimates for additional	7	2	4
Appropriations, specific and indefinite, made by former acts of Congress, which may be required for the service of the last three quarters of the fiscal year ending June 30, 1865. Statement of the Register of the Treasury of the estimates for	7	2	6
Appropriations for the fiscal year ending June 30, 1866. Letter from the Secretary of the Treasury transmitting estimates for	7	2	7
Appropriations which will be unexpended on June 30, 1865. Statement of the estimated balances of existing	7	2	
Appropriations and expenditures for the naval service for the year ending June 30, 1864. Letter from the Secretary of the Navy transmitting a statement of	8	12	
Appropriations. Letter from the Secretary of the Treasury in relation to the transfers of	8	17	
Appropriation to pay for goods purchased for Indians. Letter from the Secretary of the Interior asking for an	8	48	
Appropriation to pay for goods purchased for Indians in Arizona. Letter from the Secretary of the Interior asking for an	13	57	
Aqueduct. Report of the superintendent of the Washington	5	1	697
Aqueduct, Washington. Letter from the Secretary of the Interior transmitting supplemental report of the chief engineer of the	8	35	
Architect of the Capitol extension. Report of the	5	1	689
Arizona Territory. Annual report of the surveyor general of	5	1	109
Army, of the operations of his department during the year ending June 30, 1864. Annual report of the Chief Engineer of the	14	83	29
Army, of the operations of his department during the year ending June 30, 1864. Annual report of the Commissary General of the	14	83	46

77560

Title.	Vol.	No	Page.
Army, of the operations of his department during the year ending June 30, 1864. Annual report of the Surgeon General of the	14	83	97
Army, of the operations of his department during the year ending June 30, 1864. Annual report of the Paymaster General of the	14	83	100
Army, of the operations of his department during the year ending June 30, 1864. Annual report of the Quartermaster General of the	14	83	119
Army Register. Letter from the Secretary of War relative to the publication of the	8	40	
Army, of the operations of his department during the year ending June 30, 1864. Annual report of the Adjutant General of the	14	83	15
Auditor of the Treasury for the Post Office Department, of the operations of his office during the year ending June 30, 1864. Annual report of the Sixth	5	1	841
B.			
Balances of existing appropriations which will be unexpended on June 30, 1865. Statement of the estimated	7	2	81
Balances of appropriations to the credit of the Interior Department. Letter from the Secretary of the Interior relative to the	8	23	
Balances on the books of the Second and Third Auditors. Letter from the Comptroller transmitting statement of unpaid	13	80	
Belgians, King of the. Message from the President transmitting copy of treaties with the	8	19	
Brooklyn navy yard. Letter from the Secretary of the Navy asking appropriation for addition to the	8	10	
C.			
California. Annual report of the surveyor general of	5	1	112
California, State of. Letter from the Secretary of War transmitting statement of the number of troops furnished by the	13	77	
Canada. Letter from the Secretary of the Treasury relative to the transit of goods to and from	8	28	
Capitol extension. Report of the architect of the	5	1	689
Chippewa Indians, payment of annuities to the. Letter from the Secretary of the Interior relative to the	13	58	
Chippewa Indians, to supply deficiencies for the. Letter from the Secretary of the Interior, transmitting estimates	13	71	
Claims, Indian, an appropriation to complete the payment of certain. Letter from the Secretary of the Interior, asking	13	52	
Clerks, and others employed in the Treasury Department. Letter from the Secretary of the Treasury, transmitting a list of	13	63	
Clerks, and others employed in the Interior Department. Letter from the Secretary, transmitting a list of	13	65	
Clerks, and others employed in the Post Office Department. Letter from the Postmaster General, transmitting a list of	13	75	
Coast Survey, during the fiscal year ending June 30, 1864. Letter from the Secretary of the Treasury, transmitting the number and names of persons employed in the	8	13	
Coast Survey, for the year ending June 30, 1866. Estimates of appropriations for the continuation of the	7	2	57
Coast Survey. Report of the Superintendent of the	9	15	
Colorado Territory. Annual report of the surveyor general of	5	1	95
Colored men in the District of Columbia. Letter from the Secretary of War relative to kidnapping	13	79	
Columbian Institution for the Deaf, Dumb, and Blind. Report of the President of the	5	1	727
Commercial relations of the United States with foreign countries for the year 1864. Letter from the Secretary of State, transmitting a report on the	12	60	
Commissary General of the United States. Annual report of the	14	83	46
Commissary General, transmitting estimates for appropriations for the support of the Commissary General's department for the year ending June 30, 1866. Letter from the	7	2	33

Title.	Vol.	No.	Page.
Commissioner of Agriculture. Report of the	11	68	
Commissioner of Public Buildings. Annual report of the	5	1	680
Commissioner of Public Buildings, during the fiscal year ending June 30, 1864. Statement of the receipts and expenditures under the direction of the	5	1	688
Commissioner of Patents, transmitting the mechanical report of Patent Office for 1864. Letter from the	10	51	
Commissioners of Florida. Letter from the Secretary of the Treasury relative to the tax	8	18	
Commissioners, Peace, at Hampton Roads. Message from the President, transmitting information relative to a conference with the	13	59	
Commutation. Letter from the Secretary of War, relative to amounts paid by persons illegally drafted for	8	34	
Comptroller, transmitting reports of the Second and Third Auditors of unpaid balances on their books. Letter from the	13	80	
Construction and Repair, Bureau of. Report of the chief of the	6	1	1000
Construction and Repair of the Navy for the year ending June 30, 1866. Estimates for the support of the Bureau of	7	2	38
Contingent fund in that Department. Letter from the Secretary of the Treasury relative to the disbursement of the	8	21	
Contingent fund of the Department for the year ending June 30, 1864. Letter from the Postmaster General, transmitting statement of the expenditure of the	8	26	
Contingent fund of the State Department for the year ending June 30, 1864. Letter from the Secretary of State relative to the	8	36	
Contingent fund of the War Department. Letter from the Secretary of War, transmitting a statement of the expenditures of the	8	49	
Contingent expenses of the Navy Department. Estimates for the	6	1	1208
Contingent expenses of the War Department for the year ending June 30, 1866	7	2	35
Contingent expenses of the Post Office Department for the year ending June 30, 1866	7	2	41
Contingent fund of his department. Letter from the Secretary of War, transmitting a statement of expenditures from the	14	85	
Contracts made by the quartermaster's department. Letter from the Secretary of War, transmitting an abstract of	14	84	
Correspondence of the State Department upon foreign affairs	1—4	1	1
Court of Claims. Estimates for appropriations for the support of the	7	2	12
Courts of the United States for the year ending June 30, 1866. Estimates for appropriations for the support of the	7	2	30
Cushing, William B., Lieutenant. Message from the President recommending a vote of thanks to	8	7	
D.			
Dakota Territory. Annual report of the surveyor general of	5	1	80
Deaf, dumb, and blind. Report of the president of the Columbia Institute for the	5	1	727
District of Columbia. Report of the warden of the jail of the	5	1	774
Dock-yards and iron-works in Great Britain and France. Letter from the Secretary of the Navy, transmitting report of Chief Engineer King in relation to	8	14	
E.			
Electoral college, representation of certain States in the. Message from the President with reference to the	13	56	
Engineer department of the army for the year ending June 30, 1866. Estimates for appropriations for the support of the	7	2	34
Engineer of the army for the year ending June 30, 1864. Annual report of the chief	14	83	29
Equipment and Recruiting, Bureau of. Report of the chief of the	6	1	909
Equipment and Recruiting of the navy for the year ending June 30, 1866. Estimates for appropriations for the support of the Bureau of	7	2	37

Title.	Vol.	No.	Page.
Estimates of additional appropriations required to complete the service of the fiscal year ending June 30, 1865, and previous years	7	2	4
Estimates of permanent appropriations, specific and indefinite, made by former acts of Congress, which may be required for the service of the last three quarters of the fiscal year ending June 30, 1865	7	2	6
Estimates for appropriations for per diem and mileage of senators, and for the support of the office of the Secretary of the Senate for the year ending June 30, 1866	7	2	8
Estimates for appropriations for per diem and mileage of members, and for the support of the office of the Clerk of the House of Representatives for the year ending June 30, 1866	7	2	9
Estimates for appropriations for the support of the office of Superintendent of Public Printing for the year ending June 30, 1866	7	2	11
Estimates for appropriations for the support of the Library of Congress	7	2	11
Estimates for appropriations for the support of the Court of Claims for the year ending June 30, 1866	7	2	12
Estimates for appropriations for the support of the Executive during the year ending June 30, 1866	7	2	12
Estimates for appropriations for the support of the Department of State for the year ending June 30, 1866	7	2	13
Estimates for appropriations for the support of the Treasury Department for the year ending June 30, 1866	7	2	14
Estimates for appropriations for the support of the Department of the Interior for the year ending June 30, 1866	7	2	24
Estimates for appropriations required for the support of the office of Commissioner of the General Land Office for the year ending June 30, 1866	7	2	25
Estimates for appropriations for the support of the Indian Office for the year ending June 30, 1866	7	2	26
Estimates for appropriations for the support of the Pension Office for the year ending June 30, 1866	7	2	27
Estimates for appropriations for incidental and contingent expenses of the Department of the Interior for the year ending June 30, 1866	7	2	28
Estimates for appropriations for the support of the office of surveyors' general for the year ending June 30, 1866	7	2	28
Estimates for appropriations for the support of the courts in the United States for the year ending June 30, 1866	7	2	30
Estimates for appropriations for the support of the War Department for the year ending June 30, 1866	7	2	30
Estimates for appropriations for the support of the Navy Department for the year ending June 30, 1866	7	2	37
Estimates for appropriations for the support of the Post Office Department for the year ending June 30, 1866	7	2	41
Estimates for appropriations for the support of the Bureau of Agriculture for the year ending June 30, 1866	7	2	42
Estimates for appropriations for the support of governments in the Territories for the year ending June 30, 1866	----	----	------
Estimates for appropriations for the support of the Mint of the United States and branches and assay office in New York for the year ending June 30, 1866	7	2	42
Estimates for appropriations for the support of the judiciary for the year ending June 30, 1866	7	2	47
Estimates for appropriations for the support of intercourse with foreign nations for the year ending June 30, 1866	7	2	53
Estimates for appropriations for the support of the independent treasury for the year ending June 30, 1866	7	2	55
Estimates for appropriations for the continuation of the survey of the coast of the United States for the year ending June 30, 1866	7	2	57
Estimates for appropriations for the support of the light-house establishment for the year ending June 30, 1866	7	2	57
Estimates for appropriations for the support of the surveyors' general offices for the year ending June 30, 1866	7	2	60
Estimates for appropriations for the support of public buildings and grounds for the year ending June 30, 1866	7	2	60
Estimates for appropriations for the support of the penitentiary of the District of Columbia for the year ending June 30, 1866	7	2	62

Title.	Vol.	No.	Page.
Estimates for appropriations for the preservation of the collections of the exploring expeditions of the government for the year ending June 30, 1866.	7	2	62
Estimates for appropriations for the support of the Government Hospital for the Insane for the year ending June 30, 1866	7	2	63
Estimates for appropriations for the support of the Metropolitan Police for the year ending June 30, 1866	7	2	63
Estimates for appropriations for sundry expenses of the Patent Office during the fiscal year ending June 30, 1866	7	2	63
Estimates for appropriations for the support of the Columbian Institution for the Deaf, Dumb, and Blind, for the year ending June 30, 1866	7	2	63
Estimates for appropriations for surveying the public lands for the year ending June 30, 1866	7	2	64
Estimates for appropriations for the payment of pensions during the year ending June 30, 1866	7	2	64
Estimates for appropriations for the support of the Indian department during the year ending June 30, 1866	7	2	65
Estimates for appropriations for the support of the army for the year ending June 30, 1866	7	2	71
Estimates for appropriations for the support of the armory, arsenals, and providing munitions of war, for the year ending June 30, 1866	7	2	71
Estimates for appropriations for the support of the Military Academy for the year ending June 30, 1866	7	2	72
Estimates for appropriations for fortifications and other works of defence for the year ending June 30, 1866	7	2	73
Estimates for appropriations for the signal service for the year ending June 30, 1866	7	2	74
Estimates for appropriations for the support of the navy for the year ending June 30, 1866	7	2	74
Estimates for appropriations for the support of the marine corps for the year ending June 30, 1866	7	2	75
Estimates for appropriations for the support of navy yards for the year ending June 30, 1866	7	2	75
Estimates for appropriations for the support of marine hospitals for the year ending June 30, 1866	7	2	75
Estimates for appropriations for the support of naval magazines for the year ending June 30, 1866	7	2	75
Estimates for appropriations for the support of the Naval Academy for the year ending June 30, 1866	7	2	76
Estimates for appropriations for the support of the Naval Observatory for the year ending June 30, 1866	7	2	76
Estimates for appropriations for the support of the Nautical Almanac for the year ending June 30, 1866	7	2	76
Estimates for permanent appropriations, specific and indefinite, agreeably to former acts of Congress, for the year ending June 30, 1866	7	2	80
Estimates of appropriations for Post Office Department for the fiscal year commencing June 30, 1865. Letter from the Postmaster General transmitting	8	9	
Estimates for the Indians of the southern superintendency. Letter from the Secretary of the Interior transmitting	13	62	
Estimates to fulfil treaty stipulations with certain Indian tribes. Letter from the Secretary of the Interior transmitting	13	70	
F.			
Finances. Annual report of the Secretary of the Treasury on the state of the.	7	3	1
Florida, tax commissioners of. Letter from the Secretary of the Treasury relative to	8	18	
Foreign affairs. Papers relating to	1—4	1	1
Fortifications for the year ending June 30, 1866. Estimates for appropriations required for the support of the engineer department for	7	2	73
Fort Fisher. Letter from the Secretary of the Navy in relation to the bursting of guns at the bombardment of	8	29	
France and Great Britain. Letter from the Secretary of the Navy transmitting report of Chief Engineer King in relation to dock-yards and iron-works in	8	14	

Title.	Vol.	No.	Page.
G.			
Great Britain and France. Letter from the Secretary of the Navy, transmitting report of Chief Engineer King in relation to dock-yards and iron-works in	8	14	
Guns, Parrott rifled. Letter from the Secretary of the Navy in relation to the bursting of the	8	29	
H.			
Halleck, H. W., Major General, in relation to the duties and allowances to. Letter from the Secretary of War	8	41	
Hastings, David H., Major, record of the trial and court-martial of. Letter from the Secretary of War transmitting the	13	54	
I.			
Illinois Central Railroad Company. Letter from the Secretary of War in relation to payments made to the	8	39	
Indian Affairs. Annual Report of the Commissioner of	5	1	147
Papers accompanying the above report.			
WASHINGTON SUPERINTENDENCY.			
No. 1. Report of C. H. Hale, late superintendent	5	1	200
No. 1 A. Report of A. R. Elder, agent at Puyallup agency	5	1	204
No. 1 B. Report of E. H. Spinning, physician at Puyallup agency	5	1	207
No. 1 C. Report of Cyrus Ward, teacher at Puyallup agency	5	1	207
No. 1 D. Report of William L. Hays, farmer at Nisqually reservation	5	1	208
No. 1 E. Report of William Billings, carpenter at Puyallup agency	5	1	209
No. 1 F. Report of H. A. Webster, agent at Neeah Bay agency	5	1	209
No. 1 G. Report of James G. Swan, teacher at Neeah Bay agency	5	1	211
No. 1 H. Report of S. D. Howe, agent at Tulalip agency	5	1	212
No. 1 I. Report of Rev. E. C. Chivouse, teacher at Tulalip agency	5	1	215
No. 1 K. Report of A. A. Bancroft, agent at Yakama agency	5	1	216
No. 1 L. Report of William Wright, teacher at Yakama agency	5	1	217
No. 1 M. Report of H. C. Thompson, farmer at Yakama agency	5	1	218
No. 1. N. Report of Major C. H. Rumrill, commanding at Fort Colville	5	1	219
No. 1½. Letter of Superintendent Hale, relative to Chehalis reservation	5	1	220
No. 2. Letter of Superintendent Hale, on same subject	5	1	220
No. 3. Report of Secretary of the Interior, on same subject	5	1	221
No. 4. Letter of the Secretary of the Interior, on same subject	5	1	222
No. 5. Letter of A. R. Elder, agent, Puyallup agency	5	1	223
OREGON SUPERINTENDENCY.			
No. 6. Report of J. W. P. Huntington, superintendent	5	1	225
No. 7. Report of W. H. Barnhart, agent at Umatilla agency	5	1	230
No. 8. Report of M. Davenport, teacher at Umatilla agency	5	1	233
No. 9. Report of N. A. Convoyer, farmer at Umatilla agency	5	1	234
No. 10. Report of M. Lyons, wagon-maker at Umatilla agency	5	1	235
No. 11. Report of Backus Henry, carpenter at Umatilla agency	5	1	236
No. 12. Report of Amos Harvey, agent at Grande Ronde agency	5	1	236
No. 13. Report of J. H. Huffa, principal manual school at Grande Ronde agency	5	1	237
No. 14. Report of P. Crandall, teacher of Umpqua school at Grande Ronde agency	5	1	238
No. 15. Report of H. W. Eads, miller at Grande Ronde agency	5	1	239
No. 16. Report of G. W. Burford, farmer at Grande Ronde agency	5	1	240
No. 17. Report of N. Hudson, physician at Grande Ronde agency	5	1	240
No. 18. Report of William Logan, agent at Warm Springs reservation	5	1	241
No. 19. Report of Myron Reives, farmer at Warm Springs reservation	5	1	242
No. 20. Report of J. G. Campbell, teacher at Warm Springs reservation	5	1	243

Title.	Vol.	No.	Page.
No. 21. Report of William C. McKay, physician at Warm Springs reservation	5	1	244
No. 22. Report of J. D. Hurst, miller at Warm Springs reservation	5	1	244
No. 23. Report of George C. Cook, wagon-maker at Warm Springs reservation	5	1	245
No. 24. Report of F. B. Chase, blacksmith at Warm Springs reservation	5	1	245
No. 25. Report of Benjamin Simpson, agent at Siletz agency	5	1	246
No. 26. Report of George W. Collins, sub-agent at Alsea sub-agency	5	1	250
No. 27. Report of Thomas Clarke, farmer at Alsea sub-agency	5	1	251
No. 28. Report of E. Steele, concerning arrangement with sundry tribes of Indians	5	1	252
No. 29. Report of Superintendent Huntington, relative to trespasses on coast reservation	5	1	254
No. 30. Letter to Superintendent Huntington, same subject	5	1	255
No. 31. Letter to Superintendent Huntington, instructions relative to treaty with Klamath Lake, Modoc, and other Indians	5	1	256
No. 32. Report of Superintendent Huntington, same subject	5	1	257
No. 33. Report of Superintendent Huntington, relative to incurring indebtedness	5	1	259
No. 34. Letter to Superintendent Huntington, relative to treaties	5	1	259
CALIFORNIA SUPERINTENDENCY.			
No. 35. Report of Superintendent Wiley	5	1	260
No. 36. Letter of ex-Superintendent Steele to Hon. John Conness, relative to Indians of Oregon and California	5	1	264
No. 37. Letter to Superintendent Wiley. Instructions relative to his duties	5	1	267
No. 38. Report of Superintendent Wiley of June 1, 1864	5	1	269
No. 39. Report of Superintendent Wiley, relative to Indian prisoners	5	1	272
No. 40. Report of Superintendent Wiley relative to several reservations	5	1	272
No. 41. Report of Superintendent Wiley relative to Tejon farm	5	1	275
No. 42. Letter to Superintendent Wiley relative to location of Indian prisoners	5	1	275
No. 43. Report of Superintendent Wiley in reply	5	1	276
No. 44. Report of Superintendent Wiley relative to settlement with hostile Indians, and setting apart of Hoopa valley	5	1	278
No. 45. Report of Superintendent Wiley relative to Round Valley reservation	5	1	280
No. 45¼. Letter of instructions to Superintendent Wiley relative to Hoopa Valley reservation	5	1	281
NEVADA SUPERINTENDENCY.			
No. 46. Report of Governor Nye, ex-officio superintendent	5	1	283
No. 47. Report of Governor Nye, supplementary	5	1	285
No. 48. Report of J. T. Lockhart, Indian agent	5	1	285
No. 49. Report of J. T. Lockhart, submitting estimates	5	1	287
No. 50. Report of John C. Burche, agent for Humboldt Indians	5	1	288
No. 51. Letter of Agent Lockhart, enclosing specimens of food of Indians	5	1	293
No. 52. Letter of same relative to wounding of two Indians	5	1	293
ARIZONA SUPERINTENDENCY.			
No. 53. Report of Charles D. Poston, superintendent	5	1	294
No. 54. Report of A. F. Waldemar, engineer, relative to proposed canal	5	1	303
No. 55. Report of J. Ross Browne, special agent	5	1	305
No. 56. Report of same	5	1	308
No. 57. Report of Superintendent Poston relative to Papagos Indians	5	1	309
No. 58. Letter to Superintendent Poston relative to locating reservations	5	1	310
No. 59. Report of Superintendent Poston in reply	5	1	311
No. 59½. Report of John C. Dunn, agent for Indians near Colorado river	5	1	311

Title.	Vol.	No.	Page.
UTAH SUPERINTENDENCY.			
No. 60. Report of O. H. Irish, superintendent	5	1	312
No. 61. Report of O. H. Irish, with report of Agent Mann	5	1	315
No. 62. Report of Luther Mann, agent at Fort Bridger	5	1	316
No. 63. Report of Governor Doty, ex-officio superintendent, transmitting two treaties with Indian tribes	5	1	317
No. 64. Report to Secretary of the Interior, transmitting five treaties to be laid before the President	5	1	318
No. 65. Report of Governor Doty relative to the Indians with whom treaties had been made	5	1	318
No. 66. Report to Secretary of the Interior, transmitting papers relative to sale of Spanish Fork and San Pete reservations	5	1	320
No. 67. Letter from Secretary of the Interior in reply	5	1	322
No. 68. Letter to Governor Doty returning treaties, with amendments, for ratification	5	1	323
No. 69. Report from Superintendent Irish, August 26, 1864	5	1	323
No. 70. Letter from Governor Doty, September 1, 1864	5	1	324
NEW MEXICO SUPERINTENDENCY.			
No. 71. Report of Michael Steck, superintendent	5	1	324
No. 72. Report of John Ward, agent for Pueblo Indians	5	1	331
No. 73. Translation of Spanish document relative to establishment of Pueblos	5	1	339
No. 74. Table of statistics relative to same	5	1	343
No. 75. Report of Levi J. Keithly, agent at Cimarron agency	5	1	344
No. 76. Report of Fred. Maxwell, agent for Mouhache Utahs	5	1	345
No. 76¼. Report of Lorenzo Labadi, agent for Mescalero Apaches	5	1	346
No. 77. Report of Lorenzo Labadi, agent for Mescalero Apaches	5	1	349
No. 78. Report to Secretary of the Interior relative to enlarging Bosque Rodondo reservation	5	1	350
No. 79. Reply of Secretary of the Interior to same	5	1	351
No. 80. Report of Superintendent Steck, December 10, 1863, relative to locating Navajoes at Bosque Rodondo	5	1	351
No. 81. Letter of John N. Clark, surveyor general of New Mexico, accompanying same	5	1	352
No. 82. Letter of Agent Labadi relative to same subject	5	1	353
No. 83. Report to Secretary of the Interior, same subject	5	1	353
No. 84. Report of Superintendent Steck, transmitted with the above	5	1	355
No. 85. Report to Secretary of the Interior relative to Navajo Indians	5	1	356
No. 86. Report to Secretary of the Interior, same subject	5	1	356
No. 87. Letter of Superintendent Steck, transmitted with the above	5	1	357
No. 88. Report of Superintendent Steck, also transmitted with the above	5	1	358
No. 89. Report of Superintendent Steck, enclosing letter from Hon. M. R. y Basa	5	1	359
No. 90. Letter of Hon. M. R. y Basa to Superintendent Steck relative to depredations by Navajoes	5	1	359
COLORADO SUPERINTENDENCY.			
No. 91. Report of Governor Evans, ex-officio superintendent, (A to U inclusive, papers accompanying and referred to in above report)	5	1	360
No. 92. Letter of Governor Evans relative to hostilities with the Indians	5	1	383
No. 93. Report of Lafayette Head, agent at Conejos agency	5	1	384
No. 94. Report of S. Whitely, agent at Middle Park agency	5	1	385
No. 94¼. Report of S. G. Colley, agent at Upper Arkansas agency	5	1	386
No. 95. Report of S. G. Colley, agent at Upper Arkansas agency	5	1	388
No. 96. Letter of Hon. H. P. Bennet relative to abandonment of Fort Lyon	5	1	389
No. 97. Letter to Mr. Bennet, in reply	5	1	389
No. 98. Report of Gov. Evans, forwarding two reports of Agent Whitely	5	1	390
Nos. 99 and 100. Reports of S. Whitely, agent, enclosed with the above	5	1	390
No. 101. Letter to Gov. Evans relative to making treaty with Arapahoes and Cheyennes	5	1	392

Title.	Vol.	No.	Page.
No. 102. Report of Agent Colley relative to Caddo Indians	5	1	392
No. 103. Letter of Gov. Evans, enclosing papers relative to canal at Upper Arkansas agency	5	1	393
No. 104. Letter of H. M. Fosdick, engineer, same subject	5	1	393
No. 105. Letter of same, same subject	5	1	393
No. 106. Letter of same, same subject	5	1	394
No. 107. Letter of Gov. Evans relative to Indian hostilities	5	1	395
No. 108. Report of Robert North, messenger, forwarded with above	5	1	396
No. 109. Letter of Geo. K. Otis, esq., superintendent of overland mail route, relative to outrages by the Indians	5	1	398
No. 110. Letter of D. A. Chever, clerk to superintendent	5	1	399
No. 111. Letter to Gov. Evans relative to council with certain chiefs	5	1	400
No. 112. Report from H. S. Ketchum, special agent for vaccinating Indians	5	1	400
No. 113. Report from same	5	1	401
No. 114. Report from same	5	1	402
DAKOTA SUPERINTENDENCY.			
No. 115. Report of Gov. Edmunds, ex-officio superintendent	5	1	403
No. 116. Letter of Gov. Edmunds, forwarding Agent Wilkinson's report	5	1	406
No. 117. Report of M. Wilkinson, agent for Upper Missouri Indians	5	1	406
No. 118. Report of J. B. Hoffman, agent for Poncas	5	1	409
No. 119. Report of J. A. Lewis, farmer at Ponca reserve	5	1	413
No. 120. Report of Henry W. Reed, special agent to the Upper Missouri	5	1	413
No. 121. Report of Samuel N. Latta, agent at Fort Sully	5	1	417
No. 122. Letter to Rev. P. J. De Smet, requesting him to proceed to the Upper Missouri to visit the hostile tribes	5	1	419
No. 123. Letter to Agent Latta relative to Father De Smet's mission	5	1	420
No. 124. Letter to General Sully on same subject	5	1	420
Nos. 125, 126, 127, 128. Reports from Rev. P. J. De Smet	5	1	420
No. 129. Report of W. A. Burleigh, agent for Yancton Sioux	5	1	427
No. 130. Letter of Secretary of War relative to case of murder of Ponca Indians by soldiers	5	1	430
No. 131. Report to Secretary of the Interior, relative to relations between Indian agents and the military	5	1	430
No. 132. Letter to Governor Edmunds, relative to expenses of agencies	5	1	431
No. 133. Letter to Governor Edmunds, on same subject	5	1	432
No. 134. Letter of Governor Edmunds in reply, on same subject	5	1	434
No. 135. Letter of Governor Edmunds, relative to Ponca Indians	5	1	435
No. 136. Letter to Governor Edmunds in reply, authorizing relief	5	1	436
IDAHO AND MONTANA.			
No. 137. Report of G. E. Upson, agent at Blackfoot agency, Fort Benton	5	1	437
No. 138. Report of J. A. Vail, farmer at same agency	5	1	442
No. 139. Report of G. E. Upson, agent, supplemental to annual report	5	1	443
No. 140. Report of same, relative to making of peace between Gros Ventres and Piegans	5	1	445
No. 141. Report of same, giving information relative to hostile Sioux	5	1	446
SOUTHERN SUPERINTENDENCY.			
No. 142. Report of W. G. Coffin, superintendent	5	1	447
No. 143. Report of A. V. Coffin, physician	5	1	451
No. 144. Report of J. Harlan, agent for Cherokees	5	1	453
No. 145. Report of George A. Cutler, agent for Creeks	5	1	455
No. 146. Report of H. C. Ketchum, physician	5	1	457
No. 147. Report of I. Coleman, agent for Choctaws and Chickasaws	5	1	457
No. 148. Report of P. P. Elder, agent at Neosho agency	5	1	459
No. 149. Report of G. C. Snow, agent for Seminoles	5	1	461
No. 150. Report of J. Schoenmaker, superintendent of Osage manual labor school	5	1	462
No. 151. Letter of Superintendent Coffin, forwarding report of Agent Gookins	5	1	463

Title.	Vol.	No.	Page.
No. 152. Report of Milo Gookins, agent at the Wichita agency	5	1	463
No. 153. Report of L. T. Cox, special agent with the army	5	1	464
No. 154. Letter of Major General Blunt relative to removing the Indians	5	1	466
No. 155. Report of Superintendent Coffin, estimating for expenses of removal	5	1	467
No. 156. Report to Secretary of the Interior, relative to petition of Cherokee Indians	5	1	469
No. 157. Report to Secretary of the Interior, relative to removal of the Indians to their own country	5	1	471
No. 158. Letter of Colonel W. S. Phillips, relative to condition of Indians, and policy to be pursued	5	1	472
No. 159. Letter of General Canby, enclosing letter of Colonel Phillips, relative to Indian council at Tahamingo	5	1	472
No. 160. Letter of Superintendent Coffin, forwarding communication of Agent Elder, relative to request of his Indians to be allowed to remain in Kansas	5	1	474
No. 161. Letter of Agent Elder, as above	5	1	474
No. 162. Report of Superintendent Coffin, forwarding reports of Special Agent Cox	5	1	475
No. 162 A. 162 B. Communications from Special Agent L. T. Cox, relative to affairs in the Indian country	5	1	475
No. 163. Letter of Agent Gookins, enclosing document addressed to rebel commissioner of Indian affairs	5	1	478
No. 164. Report to Secretary of the Interior, relative to return of the Indians to their country	5	1	479
No. 165. Letter to Superintendent Coffin, on same subject	5	1	480
No. 166. Report of Superintendent Coffin, about to commence the removal	5	1	481
No. 167. Report of Superintendent Coffin, *en route*	5	1	482
No. 168. Letter of Superintendent Coffin to Leavenworth Times, relative to treaty with Creeks	5	1	483
No. 169 to 171 inclusive. Reports of Superintendent Coffin, journey to and arrival at Fort Gibson with the Indians	5	1	484
No. 172. Petition of Creek chiefs for relief	5	1	487
No. 173. Report to Secretary of the Interior relative to protection of crops of Indians	5	1	488
No. 174. Letter of Agent Harlan, forwarded with above	5	1	489
No. 175. Letter to Superintendent Coffin relative to stealing of Indian cattle	5	1	491
No. 176. Report of Superintendent Coffin, in reply	5	1	491
CENTRAL SUPERINTENDENCY.			
No. 177. Report of W. M. Albin, superintendent	5	1	492
No. 178. Report of R. W. Furnas, Omaha agency	5	1	493
No. 179. Report of Rev. R. J. Burtt, missionary Omaha school	5	1	497
No. 180. Report of H. B. Gaylord, farmer at Omaha agency	5	1	498
No. 181. Report of R. W. Furnas, agent, of arrival of Ponca nation at his agency	5	1	499
No. 182. Report of same, relative to outrage by soldiers upon Omahas	5	1	499
No. 183. Letter to Agent Furnas relative to payment to satisfy Indians for their loss	5	1	500
No. 184. Report of John G. Pratt, agent of Delawares	5	1	500
No. 185. Report of E. A. Morse and M. E. Everhart, teachers of Delaware school	5	1	502
No. 186. Report of H. W. Martin, agent for Sacs and Foxes of the Mississippi	5	1	502
No. 187. Report of R. P. Duvall, superintendent of school for Sacs and Foxes of Mississippi	5	1	504
No. 188. Report of Rev. J. Romig, teacher of school for Chippewa and Christian Indians	5	1	505
No. 189. Letter of H. W. Martin, agent, forwarding declaration of loyalty by Indians	5	1	506
No. 190. Declaration of loyalty, referred to above	5	1	506
No. 191. Letter to Agent Martin, acknowledging receipt of above	5	1	509
No. 192. Report of H. W. Farnsworth, agent at Kansas agency	5	1	510

Title.	Vol.	No.	Page.
No. 193. Report of Mahlon Stubbs, teacher of Friends' mission school at Kansas agency	5	1	511
No. 194. Report of G. S. Huffaker, farmer at Kansas agency	5	1	512
No. 195. Report of Agent Farnsworth relative to military order forbidding Indians to go out on their hunt	5	1	513
No. 196. Report to Secretary of the Interior on same subject	5	1	513
No. 197. Report of W. W. Ross, agent for Pottawatomies	5	1	514
No. 198. Report of Rev. J. F. Diels, superintendent of Pottawatomie manual labor school	5	1	516
No. 199. Report of Abram Bennett, agent for Kickapoos	5	1	517
No. 200. Report of John A. Burbank, agent for Sacs and Foxes of Missouri	5	1	518
No. 201. Report of J. W. Washburn, farmer for Sacs and Foxes of Missouri	5	1	520
No. 202. Report of William Dailey, agent for Ottoes and Missourias	5	1	520
No. 203. Report of same, relative to payment of Indian annuities in coin	5	1	522
No. 204. Letter to Agent Daily in reply to the above	5	1	522
No. 205. Report of James B. Abbott, agent for Shawnees	5	1	523
No. 206. Report of James Stanley, superintendent of Friends' Shawnee manual labor school	5	1	525
No. 207. Report of B. F. Lushbaugh, agent for Pawnees	5	1	526
No. 208. Report of J. B. Maxfield, teacher of Pawnee manual labor school	5	1	527
No. 209. Report of Charles H. Whaley, farmer at Pawnee agency	5	1	529
No. 210. Letter of Agent Lushbaugh, asking instructions to make a treaty between Pawnees and Sioux	5	1	529
No. 211. Letter to Agent Lushbaugh in reply to above	5	1	530
No. 212. Report of John Loree, agent at Upper Platte agency—A to F, inclusive, (papers accompanying Agent Loree's report)	5	1	530
No. 213. Report of G. A. Colton, agent at Osage River agency	5	1	535
No. 214. Report of C. C. Hutchinson, agent for Ottowas	5	1	536
NORTHERN SUPERINTENDENCY.			
No. 215. Report of Clark W. Thompson, superintendent	5	1	538
No. 215 A. Itinerary of Lieutenant S. K. King, chief engineer, accompanying above report	5	1	549
No. 216. Report of St. A. D. Balcombe, agent for Winnebagoes and Sioux, at Usher's landing, Dakota	5	1	552
No. 217. Report of Rev. J. P. Williamson, of Sioux mission school, at same agency	5	1	558
No. 218. Report of A. C. Morril, agent for Chippewas of the Mississippi	5	1	559
No. 219. Report of G. F. Townsend, physician for same	5	1	561
No. 220. Report of L. E. Webb, agent for Chippewas of Lake Superior	5	1	562
No. 221. Report of V. Smith, M. D., physician for same	5	1	563
No. 222. Report of James A. Western, farmer for same	5	1	563
No. 223. Letter of missionaries, members of the Sioux mission, relative to the condition and circumstances of the Indians at Crow Creek reservation	5	1	564
No. 224. Letter of Agent Balcombe, asking for troops, to be placed under his orders	5	1	566
No. 225. Letter to Agent Balcombe in reply to the above	5	1	567
No. 226. Letter of Secretary of War to Secretary of the Interior, transmitting copy of report of Major General Pope, relative to a proposed change of policy in regard to Indians	5	1	568
No. 227. Letter of General Halleck, transmitting above report to Secretary of War	5	1	568
No. 228. Report of Major General Pope, above referred to	5	1	568
No. 229. Report to Secretary of the Interior on the subject-matter contained in General Pope's report	5	1	573
No. 230. Letter of Superintendent Thompson, forwarding copy of letter of Lieutenant Hollister, relative to alleged ill feeling of Hole-in-the-Day	5	1	575
No. 231. Letter of Lieutenant Hollister, above referred to	5	1	576
No. 232. Report of Agent A. C. Morril on the same subject	5	1	576

Title.	Vol.	No.	Page.
No. 233. Letter of Hole-in-the-Day, forwarded with the above	5	1	577
No. 234. Letter of Shob-aush-kung, Mille Lac chief, asking to have payments made at Mille Lac	5	1	577
No. 235. Petition of forty-five chiefs and headmen to same effect	5	1	578
No. 236. Letter to Superintendent Thompson, authorizing payments to be made at Mille Lac; also on the subject of paying their annuities in coin	5	1	578
GREEN BAY SUPERINTENDENCY.			
No. 237. Report of M. M. Davis, agent	5	1	579
No. 238. Report of J. Slingerland, teacher for the Menomonees	5	1	583
No. 239. Report of Rosalie Dousman, teacher for the Menomonees	5	1	584
No. 240. Report of Kate Dousman, teacher for the Menomonees	5	1	584
No. 241. Report of Jane Dousman, teacher for the Menomonees	5	1	585
No. 242. Report of Ogden Brooks, blacksmith for the Menomonees	5	1	585
No. 243. Report of H. H. Martin, farmer for the Menomonees	5	1	586
No. 244. Report of Edwin R. Murdock, miller for the Menomonees	5	1	586
No. 245. Report of E. R. Goodenough, teacher of Oneida Protestant Episcopal mission school	5	1	587
No. 246. Report of William Willard, teacher of Oneida Methodist Episcopal mission school	5	1	587
MACKINAC AGENCY.			
No. 247. Report of D. C. Leach, agent	5	1	588
No. 248. Letter of Agent Leach, forwarding petition of certain bands of Chippewas, asking that a new treaty be made with them	5	1	591
No. 249. Petition of chiefs of Chippewas of Swan creek and Black river, above referred to	5	1	592
No. 250. Letter to Agent Leach on the same subject	5	1	593
No. 251. Report of Agent Leach on the same subject	5	1	593
No. 252. Report of same on the same subject	5	1	594
No. 253. Report of H. J. Alvord, special commissioner, transmitting treaty with Chippewas of Swan creek and Black river	5	1	594
No. 254. Report of Edwin Ellis, superintendent of Odanah manual labor school	5	1	596
NEW YORK AGENCY.			
No. 255. Report of John Manly, special agent to New York Indians	5	1	597
No. 256. Report of Asher Wright, clerk of Thomas asylum for orphan Indian children	5	1	598
No. 257. Remarks of Agent Manly to the several tribes of New York Indians	5	1	600
No. 258. Report of Charles E. Mix, esq., special commissioner to treat with the New York Indians for the extinguishment of their title to certain lands in Kansas	5	1	604
No. 259. Minutes of proceedings of council held at Cattaraugus reservation	5	1	606
No. 260. Minutes of proceedings at an informal council with chiefs of the Onondagas, Oneidas, and Cayugas	5	1	608
No. 261. Minutes of conference with people of the Seneca nation	5	1	610
No. 262. Letter to Henry Silverheels, president of the Seneca nation	5	1	611
No. 263. Tabular statements of Indian trust funds, numbered 1, 2, and 3	5	1	612
No. 264. Statement of liabilities to Indian tribes under treaty stipulations	5	1	618
No. 265. Statement of population, wealth, education, and agriculture among the different Indian tribes	5	1	630
Indian affairs, transmitting estimates for the support of his office for the year ending June 30, 1866. Letter from the Commissioner of	7	2	26
Indians, Kaskaskia, Peoria, Wea, and Piankeshaw, recommending payment of money to the. Letter from the Secretary of the Interior	13	74	
Insane Hospital. Annual report of the board of visitors for the	5	1	74
Interior. Annual report of the Secretary of the	5	1	1

Title.	Vol.	No.	Page.
Papers accompanying.			
Annual report of the Commissioner of the General Land Office	5	1	19
Annual report of the Commissioner of Indian Affairs	5	1	147
Annual report of the Commissioner of Pensions	5	1	652
Annual report of the Commissioner of Public Buildings	5	1	680
Annual report of the architect of the Capitol extension	5	1	689
Annual report of the chief engineer and general superintendent of the Washington aqueduct	5	1	697
Annual report of the board of visitors of the Government Hospital for the Insane	5	1	714
Annual report of the Columbian Institution for the Deaf and Dumb and the Blind	5	1	727
Annual report of the Board of Metropolitan Police	5	1	761
Annual report of the warden of the jail in the District of Columbia	5	1	774
Interior, transmitting estimates of the department for the year ending June 30, 1866. Letter from the Secretary of the	7	2	24
Interior. Estimates for appropriations for the incidental and contingent expenses of the Department of the	7	2	28
Interior, in answer to a joint resolution of Congress in relation to public reservations in Washington city. Letter from the Secretary of the	8	5	
Interior, transmitting annual statement of balance of appropriations. Letter from the Secretary of the	8	23	
Interior, transmitting supplemental report of the chief engineer of the Washington aqueduct. Letter from the Secretary of the	8	35	
Interior, asking an appropriation for medals for certain Indian chiefs. Letter from the Secretary of the	8	47	
Interior, asking an appropriation to pay for goods purchased for Indians. Letter from the Secretary of the	8	48	
Interior, asking an appropriation to complete the payment of certain Indian claims. Letter from the Secretary of the	13	52	
Interior, asking an appropriation to pay for purchases made for Indians in Arizona. Letter from the Secretary of the	13	57	
Interior, in relation to the payment of annuities to the Chippewa Indians of Lake Superior. Letter from the Secretary of the	13	58	
Interior, transmitting estimates for the Indians of the southern superintendency. Letter from the Secretary of the	13	62	
Interior, transmitting a list of clerks and others employed in the Interior Department. Letter from the Secretary of the	13	65	
Interior, transmitting an estimate for an appropriation to pay William Sawyer and others. Letter from the Secretary of the	13	67	
Interior, estimates for appropriations to fulfil treaty stipulations with certain Indian tribes. Letter from the Secretary of the	13	70	
Interior, transmitting estimates to supply deficiencies for the Chippewa Indians. Letter from the Secretary of the	13	71	
Interior, relative to the Indian trust bonds. Letter from the Secretary of the	13	72	
Interior, recommending payment of money to the Kaskaskia, Peoria, Wea, and Piankeshaw Indians. Letter from the Secretary of the	13	74	
Iowa, annual report of the surveyor general of	5	1	72
J.			
Judge Advocate General. Report of the	14	83	48
Judiciary for the year ending June 30, 1866. Estimates for the support of the	7	2	37
K.			
Kansas, annual report of the surveyor general of	5	1	85
Key, Colonel, relative to the exchange of prisoners of war. Message from the President, transmitting report of	8	20	
King, Chief Engineer, in relation to dock-yards and iron-works in Great Britain and France. Letter from the Secretary of the Navy, transmitting report of	8	14	

Title.	Vol.	No.	Page.
L.			
Lake Erie, rebel raid on, in answer to a resolution of the House in regard to the. Letter from the Secretary of War	8	45	
Land Office, General. Annual report of the Commissioner of the	5	1	19
Papers accompanying the above.			
No. 1. Statement of the surveying returns to this office for the fiscal year ending June 30, 1864, and for the quarter ending September 30, 1864	5	1	45
No. 2. Statement of public lands sold, of cash received therefor; number of acres entered under the homestead law of May 20, 1862, and with Agricultural College scrip; commissions received under sixth section of said act, and statement of incidental expenses thereon, and of payments into the treasury on account thereof, in the fiscal year commencing July 1, 1863, and ending June 30, 1864	5	1	46
No. 3. Summary for the fiscal year ending 30th June, 1864, showing the number of acres disposed of for cash; with bounty land scrip; by entry under the homestead laws of 20th May, 1862, and 21st March, 1864, with aggregate of $10 homestead payments; homestead commissions; also, locations with Agricultural and Mechanic College scrip, under act of 2d July, 1862	5	1	58
No. 4. Statement exhibiting the quantity of land certified to the States under the railroad grants of 1850, 1852, 1853, 1856, and 1857	5	1	60
No. 5. Statement exhibiting the quantity of land selected for the several States under the acts of Congress approved March 2, 1849, and September 28, 1850, and March 12, 1860, up to and ending September 30, 1864	5	1	61
No. 6. Statement exhibiting the quantity of land approved to the several States under the acts of Congress approved March 2, 1849, and September 28, 1850, up to and ending September 30, 1864	5	1	62
No. 7. Statement exhibiting the quantity of land patented to the several States under the act of Congress approved September 28, 1850, with appendix	5	1	63
No. 8. Condition of bounty land business under acts of 1847, 1850, 1852, and 1855, showing the issues and locations from the commencement of the operations under said acts to September 30, 1864	5	1	64
No. 9. Estimates of appropriations required for the office of the Commissioner of the General Land Office for the fiscal year ending June 30, 1866	5	1	66
No. 10. Estimates of appropriations for the surveying department for the fiscal year ending June 30, 1866	5	1	68
No. 11. Estimates of appropriations required for surveying the public lands for the fiscal year ending June 30, 1866	5	1	70
No. 12. Estimates of appropriations for the surveying department, to supply deficiencies for the fiscal year ending June 30, 1863	5	1	72
No. 13. Reports of surveyors general, A to K, inclusive	5	1	72
No. 14. Exhibit in regard to pueblos in New Mexico and Arizona	5	1	145
No. 15. Connected map of the public land, States and Territories, compiled from the diagrams accompanying the reports of the surveyors general.			
Land Office for the year ending June 30, 1866. Letter from the Commissioner transmitting estimates for the support of the General	7	2	25
Library of Congress. Estimates for appropriations for the support of the	7	2	11
Light-house establishment for the year ending June 30, 1866. Estimates for appropriations for the support of the	7	2	57
M.			
Marine corps, quartermaster of the. Report of the	6 7	1 2	1193 214
Marine corps for the year ending June 30, 1866. Estimates for appropriations for the support of the	6	1	1196
Medals for Indian chiefs. Secretary of the Interior asking an appropriation for	8	47	
Medicine and Surgery of the Navy for the year ending June 30, 1866. Estimates for the support of the Bureau of	7	2	39

Title.	Vol	No.	Page.
Medicine and Surgery, Bureau of. Report of the chief of the	6	1	1174
Metropolitan Police. Report of the Board of	5	1	761
Military Academy for the year ending June 30, 1866. Estimates for appropriations for the support of the	7	2	72
Ministers, exemption from military duty of certain. Letter from the Secretary of War relative to	13	53	
Minnesota. Annual report of the surveyor general of	5	1	134
Mint of the United States. Letter from the Secretary of the Treasury, transmitting an account of the receipts and expenditures for the year ending June 30, 1864, of the	8	37	
Money Order Bureau for the year ending June 30, 1866. Estimates for the support of the	7	2	41
Morgan, George W., General, relative to the evacuation of Cumberland Gap. Letter from the Secretary of War, declining to furnish the letters of	13	69	
N.			
Nautical Almanac for the year ending June 30, 1866. Estimates for appropriations for the support of the	7	2	76
Naval Academy for the year ending June 30, 1866. Estimates for the support of the	7	2	76
Naval Observatory for the year ending June 30, 1866. Estimates for appropriations for the support of the	7	2	76
Navigation, Bureau of. Report of the chief of the	6	1	949
Navigation for the year ending June 30, 1866. Estimates for appropriations for the support of the Bureau of	7	2	38
Navy. Annual report of the Secretary of the	6	1	iii
Papers accompanying the above report.			
Index to reports of officers	6	1	lii
Reports of officers	6	1	1
Statement of vessels captured or destroyed from November 1, 1863, to October 31, 1864	6	1	724
Statement of prizes adjudicated from the commencement of the rebellion to October 31, 1864	6	1	733
Reports of the chiefs of Bureaus, and accompanying papers	6	1	751
No. 1. Detailed estimates of the office of the Secretary of the Navy and the southwest executive building	6	1	752
	7	2	37
No. 2. Report and detailed estimates of the Bureau of Yards and Docks	6	1	753
	7	2	37
No. 3. Report and detailed estimates of the Bureau of Equipment and Recruiting	6	1	909
	7	2	37
No. 4. Report and detailed estimates of the Bureau of Navigation	6	1	949
	7	2	38
No. 5. Report and detailed estimates, &c., of the Bureau of Ordnance	6	1	969
	7	2	38
No. 6. Report, detailed estimates, &c., of the Bureau of Construction and Repair	6	1	1000
	7	2	38
No. 7. Detailed estimates, &c., of the Bureau of Steam Engineering	6	1	1099
	7	2	39
No. 8. Report, detailed estimates, &c., of the Bureau of Provisions and Clothing	6	1	1161
	7	2	39
No. 9. Report, detailed estimates, &c., of the Bureau of Medicine and Surgery	6	1	1174
	7	2	39
No. 10. Report of the commandant of the marine corps, and detailed estimates of the paymaster and quartermaster of the corps	6	1	1193
	7	2	214
No. 11. General estimate (civil) of the office of the Secretary of the Navy, and the bureaus, and the southwest executive building	6	1	1208
	7	2	39
No. 12. Summary estimate for the naval service, marine corps, &c	6	1	1209
No. 13. General estimate—navy proper	6	1	1211
No. 14. General estimate—marine corps	6	1	1212
	7	2	214

Title.	Vol.	No.	Page.
No. 15. General estimate for special objects under the control of the Navy Department	6	1	1212
No. 16. Letter of the Secretary of the Navy recommending an increase in the number of officers in the several grades of the navy	6	1	1213
No. 17. Report of the examination of the graduating class of midshipmen at the Naval Academy in steam engineering	6	1	1214
No. 18. Report on the dock-yards and iron-works of Great Britain and France, by Chief Engineer J. W. King, U. S. N	6	1	1216
Navy, asking appropriations for addition to the Brooklyn navy yard. Letter from the Secretary of the	8	10	
Navy, transmitting a statement of the appropriations and expenditures for the naval service for the year ending June 30, 1864. Letter from the Secretary of the	8	12	
Navy, transmitting report of Chief Engineer King in relation to dock-yards and iron-works in Great Britain and France. Letter from the Secretary of the	8	14	
Navy Department for the year ending June 30, 1866. Estimates for salaries and contingent for the	6 7	1 2	1208 37
Navy Department for the year ending June 30, 1866. Estimates of appropriations under the cognizance of the	6	1	1211
Navy Department for the year ending June 30, 1866. Estimates of appropriations for the support of the marine corps under the cognizance of the	6	1	1212
Navy Department for the year ending June 30, 1866. Estimates of appropriations for navy yards and other special objects for the	6	1	1212
Navy, relative to the exchange of naval prisoners. Letter from the Secretary of the	8	22	
Navy, in relation to bursting of Parrott rifled guns at the bombardment of Fort Fisher. Letter from the Secretary of the	8	29	
Navy, transmitting report of the board to select a site for a naval station on the Mississippi. Letter from the Secretary of the	13	61	
Nebraska. Annual report of the surveyor general of Kansas and	5	1	85
New Mexico. Annual report of the surveyor general of	5	1	99
O.			
Ordnance, Bureau of. Report of the chief of the	6	1	969
Ordnance department of the army for the year ending June 30, 1866. Estimates for the support of the	7	2	35
Ordnance department of the navy for the year ending June 30, 1866. Estimates for the support of the	7	2	38
Oregon. Annual report of the surveyor general of	5	1	126
Overland California mail. Letter from the Postmaster General transmitting list of bidders for carrying the	8	24	
P.			
Passengers arriving in the United States for the year ending December 31, 1864. Letter from the Secretary of State, transmitting annual statement of	13	76	
Patents, transmitting the mechanical report of the Patent Office for the year 1864. Letter from the Commissioner of	10	51	
Paymaster General, transmitting estimates for appropriations for the support of the Paymaster General's department for the year ending June 30, 1866. Letter from the	7	2	32
Paymaster General of the army. Annual report of the	14	83	100
Pensions. Annual report of the Commissioner of	5	1	652
Papers accompanying the above report.			
A.—Statement of the number and yearly amount of original applications, and for increase of army pensions, admitted in each State and Territory for the year ending June 30, 1864	5	1	675

Title.	Vol.	No.	Page.
B.—Statement of the amount of arrearages of army pensions admitted and payable at the date of issuing the pension certificates for the year ending June 30, 1864	5	1	676
C.—Statement of the amount paid for army pensions in each State and Territory for the year ending June 30, 1864	5	1	676
D.—Statement of the amounts in the hands of agents for paying army pensions on the 30th day of June, 1864	5	1	677
E.—Statement of the number and yearly amount of army pensions on the rolls June 30, 1864, who have been paid within fourteen months	5	1	677
F.—Statement of the number, yearly amount, and arrearages of original applications, and for increase of navy pensions, admitted during the year ending June 30, 1864	5	1	678
Pensions, transmitting estimates for appropriations for the office for the year ending June 30, 1866. Letter from the Commissioner of	7	2	27
Police. Report of the Board of Metropolitan	5	1	761
Postmaster General, transmitting annual report of the Post Office Department. Letter from the	5	1	777
Papers accompanying the above report.			
No 1. Statement of revenue and expenditures for eleven years, from 1854 to 1864, inclusive	5	1	799
No. 2. Estimates for expenditures for 1866	5 7	1 2	799 41
No. 3. Postage stamps and stamped envelopes issued during the fiscal year 1863–'64	5	1	800
No. 4. Comparative statement of the value of stamps and stamped envelopes issued during the last five years	5	1	801
No. 5 A. Table of mail service in the following States and Territories for the year ending June 30, 1864, as exhibited by the state of the arrangements at the close of the year	5	1	803
No. 5 B. Mail service in the States of New Jersey, Pennsylvania, Delaware, Maryland, and Ohio	5	1	804
No. 5 C. Railroad service as in operation on the 30th of June, 1864	5	1	805
No. 5 D. Railroad service as in operation on the 30th of September, 1864	5	1	816
No. 5 E. Steamboat service as in operation September 30, 1864	5	1	820
No. 5 F. A table showing the increase and decrease of mail transportation, and cost, in the following States and Territories, during the year ending June 30, 1864	5	1	823
No. 6. Statement of the number, kinds, sizes, and cost of mail bags, purchased under contract and put into service during the fiscal year ending June 30, 1864	5	1	824
No. 7. Showing operations and results of the foreign mail service for the fiscal year ending June 30, 1864	5	1	824
No. 8. Additional articles to the articles agreed upon between the Post Office of the United States of America and the Post Office of the United Kingdom of Great Britain and Ireland, for carrying into execution the convention of December 15, 1848	5	1	827
No. 9. Additional articles agreed upon between the Post Office Department of the United States and the Post Office Department of the Hanseatic republic of Bremen, providing for the conveyance of the international correspondence in time of war, or threatening war	5	1	828
No. 10. Additional article agreed upon between the Post Office Department of the United States and the Post Office Department of the Hanseatic republic of Hamburg, providing for the conveyance of the international correspondence in time of war, or threatening war	5	1	828
No. 11. Table showing the increase and decrease of post offices in the several States and Territories; also the number of post offices at which appointments are made by the President and by the Postmaster General	5	1	829
No. 12. Total operations of the appointment office for the year ending June 30, 1864	5	1	830
No. 13. List of the first, second, and third classes of post offices as classified by the Postmaster General under the act of July 1, 1864. with the amount of salary assigned to each	5	1	831

Title.	Vol.	No.	Page.
No. 14. Post offices at which letter-carriers are employed, with the number and annual aggregate compensation of the latter at each office	5	1	836
No. 15. Statement of the operations of the free delivery letter-carrier system at the following offices for the fiscal year ending June 30, 1864	5	1	838
No. 16. Statement of dead letters returned to and received from foreign countries during the fiscal year 1863–'64	5	1	838
No. 17. Table showing the whole number of letters received from and sent to foreign countries, the number of dead letters, and the relative percentage thereof, during the last five years, from 1860 to 1864, inclusive	5	1	839
No. 18. Statement showing the disposition of letters received containing money during the year ending June 30, 1864	5	1	839
No. 19. Annual statement of dead letters containing papers of value other than money registered and sent out for delivery to the writers or owners thereof during the fiscal year ending June 30, 1864	5	1	840
No. 20. Statement of letters containing miscellaneous articles received during the year ending June 30, 1864	5	1	840
Auditor's report	5	1	841
Showing—			
1. Receipts of the department under their several heads	5	1	859
2. Expenditures under the several heads	5	1	862
3. Postal receipts and expenditures in the several States and Territories	5	1	860
4. Operations of the free delivery letter-carrier system, as compared with the letter-carrier system under the old system	5	1	863
5. Amount of letter postage on British mails received in and sent from the United States	5	1	864
6. Amount of letter postage on Prussian mails received in and sent from the United States	5	1	865
7. Amount of letter postage on French mails received in and sent from the United States	5	1	866
8. Amount of letter postage on Belgian mails received in and sent from the United States	5	1	867
9. Amount of letter postage on Bremen mails received in and sent from the United States	5	1	868
10. Amount of letter postage on Hamburg mails received in and sent from the United States	5	1	868
11. Number of letters and newspapers exchanged between the United States and the United Kingdom, in British mails	5	1	869
12. Number of letters and newspapers exchanged between the United States and the Kingdom of Prussia, in closed mails	5	1	869
13. Number of letters and newspapers exchanged between the United States and France	5	1	870
14. Number of letters exchanged between the United States and Belgium	5	1	870
15. Number of letters and newspapers exchanged between the United States and Bremen	5	1	871
16. Number of letters and newspapers exchanged between the United States and Hamburg	5	1	871
17. Number of letters and newspapers, with the several postages, conveyed by the West India line of ocean steamers	5	1	872
18. Number of letters and newspapers, with the several postages, conveyed by the South Pacific line of ocean steamers	5	1	872
19. Number of letters and newspapers exchanged between the United States and foreign countries	5	1	873
20. Revenue to the United States, also to the United States post office by the Cunard line	5	1	873
21. Amount of postages on mails exchanged between the United States and the British Provinces	5	1	874
22. Prussian closed mail account for the year ending December 31, 1863	5	1	875
23. Canadian closed mail account for the year ending December 31, 1863	5	1	876
24. California closed mail account for the year ending December 31, 1863	5	1	877
25. Belgian closed mail account for the year ending December 31, 1863	5	1	877

Title.	Vol.	No.	Page.
26. Havana closed mail account for the year ending December 31, 1863.	5	1	878
27. Mexican closed mail account for the year ending December 31, 1863.	5	1	878
28. Account of the United Kingdom of Great Britain and Ireland with the United States for the year ending December 31, 1863	5	1	879
29. Account of the general post office of France with the United States for the fiscal year ending June 30, 1863	5	1	880
30. Account of the kingdom of Prussia with the United States	5	1	881
31. Account of the general post office at Belgium with the general post office of the United States	5	1	882
32. Account of the post office at Hamburg, Germany, with the United States	5	1	885
33. Account of the post office of Bremen, Germany, with the United States	5	1	886
34. Balances due the United States on the adjustment of accounts between the United States and Belgium	5	1	887
35. Amount of postage accounted for on foreign letters sent from and returned to the United States	5	1	888
36. Amounts reported as due the steamers of the Canadian line, being the sea postages	5	1	889
37. Amounts reported as due the steamers of the German Lloyd line, being the sea postages	5	1	890
38. Amounts reported as due the steamers of the Hamburg line, being the sea postages	5	1	891
39. Amounts reported as due the steamers of the miscellaneous line, being the sea postages	5	1	891
40. Amounts reported as due the steamers of the West India line	5	1	893
41. Amounts reported as due the steamers of the South Pacific line	5	1	896
Postmaster General, transmitting estimates of appropriations for that department for the fiscal year commencing June 30, 1865. Letter from the	8	9	
Postmaster General, transmitting list of bidders' names, bids, and proffers to contract for carrying the overland California mail. Letter from the	8	24	
Postmaster General, transmitting statement of the expenditures of the contingent fund of the Post Office Department for the year ending June 30, 1864. Letter from the	8	26	
Postmaster General, on the subject of a patent cancelling and marking stamp used by the department. Letter from the	8	27	
Postmaster General, transmitting list of clerks and others employed in the Post Office Department. Letter from the	13	75	
Post Office Department, transmitting statement of the receipts and expenditures of the. Letter from the Treasurer of the United States	8	44	
President of the United States on the state of the Union, with accompanying documents and reports. Annual message of the	1	1	1
President of the United States, recommending a vote of thanks to Captain John A. Winslow. Message from the	8	6	
President of the United States, recommending a vote of thanks to Lieutenant William B. Cushing. Message from the	8	7	
President of the United States, transmitting copy of treaties with the King of the Belgians. Message from the	8	19	
President of the United States, transmitting report of Colonel Key relative to the exchange of prisoners of war. Message from the	8	20	
President of the United States, in relation to the presentation of a sword to Captain Henry S. Stellwagen. Message from the	13	55	
President of the United States, in reference to the representation of certain States in the electoral college. Message from the	13	56	
President of the United States, relative to the conference held at Hampton Roads with the peace commissioners. Message from the	13	59	
Printing Bureau of the Treasury Department. Letter from the Secretary of the Treasury in regard to the	8	50	
Printing Bureau of the Treasury Department, additional papers in relation to the. Letter from the Secretary of the Treasury, transmitting	13	64	
Prisoners of war. Message from the President, transmitting report of Colonel Key relative to the exchange of	8	20	
Prisoners, naval. Letter from the Secretary of the Navy relative to the exchange of	8	22	

Title.	Vol.	No.	Page.
Prisoners. Letter from the Secretary of War in answer to a resolution of the House of December 21, relative to the exchange of	8	32	
Prisoners, rebel, relative to the enlistment of. Letter from the Secretary of War	13	80	
Products in States in insurrection. Letter from the Secretary of War, relative to the purchase of	8	16	
Provisions and Clothing, Bureau of. Report of the chief of the	6	1	1161
Provisions and Clothing in the navy for the year ending June 30, 1866. Estimates for the support of the Bureau of	7	2	39
Provost Marshal General of the United States. Annual report of the	14	83	49
Public Buildings. Annual report of the Commissioner of	5	1	680
Public Buildings during the fiscal year ending June 30, 1864. Statement of the receipts and expenditures under the direction of the Commissioner of	5	1	688
Public Printing. Estimates for appropriations for the support of the office of	7	2	11
Public Printing for the year ending June 30, 1865. Estimates of additional appropriations for the office of the Superintendent of	8	4	
Public Printing, showing the condition of the public printing and binding. Letter from the Superintendent of	8	25	
Q.			
Quartermaster General, transmitting estimates for appropriations for the support of the Quartermaster's General's department for the year ending June 30, 1866. Letter from the	7	2	31
Quartermaster's department, in relation to the assignment of officers in the. Letter from the Secretary of War	8	42	
Quartermaster General of the United States. Annual report of the	14	83	119
Quartermaster's department, contracts made by the. Letter from the Secretary of War transmitting an abstract of	14	84	
R.			
Railroad Company, in relation to payments made to the Illinois Central. Letter from the Secretary of War	8	39	
Receipts and expenditures of the United States for the year ending June 30, 1864. Letter from the Secretary of the Treasury, transmitting statement of the	13	73	
Recruits, naval. Letter from the Secretary of War in relation to the apportionment in the different districts of	8	30	
Regiments, recruits for old. Letter from the Secretary of War respecting	8	43	
Reservations in Washington city. Letter from the Secretary of the Interior in answer to a joint resolution of Congress in relation to the public	8	5	
S.			
Sawyer, William, and others. Letter from the Secretary of the Interior asking an appropriation to pay	13	67	
Slaves, enlisted as volunteers. Letter from the Secretary of War in relation to compensation to owners of	8	38	
Stamp, cancelling and marking. Letter from the Postmaster General on the subject of a patent	8	27	
State Department upon foreign affairs. Correspondence of the	1–4	1	1
State Department. Estimates for appropriations for the support of the	7	2	12
State, transmitting returns of the United States collectors relative to relief and protection of American seamen. Letter from the Secretary of	8	8	
State Department for the year ending June 30, 1864. Letter from the Secretary of State, transmitting statement of the incidental expenses of the	8	36	
State, transmitting a report on the commercial relations of the United States with foreign countries for the year 1864. Letter from the Secretary of	12	60	

Title.	Vol.	No.	Page.
State, transmitting statement of the number of passengers arriving in the United States. Letter from the Secretary of	13	76	
Steam Engineering, Bureau of. Report of the chief of the	4	1	1099
Steam Engineering in the navy for the year ending June 30, 1866. Estimates for the support of the Bureau of	7	2	39
Stellwagen, Henry S., Captain, presentation of a sword to. Message from the President relative to the	13	55	
Subsistence department, officers employed in the. Letter from the Secretary of War, transmitting a list of	8	46	
Superintendent of the Washington aqueduct. Report of the	5	1	697
Surgeon General, transmitting estimates for appropriations for the support of the Surgeon General's department for the year ending June 30, 1866	7	2	33
Surgeon General of the United States. Annual report of the	14	83	97
Surplus fund. Statement of the estimated balances of existing appropriations which will be unexpended on June 30, 1865; also the amounts which may be carried to the	7	2	81
Surveyor General of Iowa. Annual report of the	5	1	72
Surveyor General of Dakota Territory. Annual report of the	5	1	80
Surveyor General of Kansas and Nebraska. Annual report of the	5	1	85
Surveyor General of Colorado Territory. Annual report of the	5	1	95
Surveyor General of New Mexico. Annual report of the	5	1	99
Surveyor General of Arizona Territory. Annual report of the	5	1	109
Surveyor General of California. Annual report of the	5	1	112
Surveyor General of Oregon. Annual report of the	5	1	126
Surveyor General of Minnesota. Annual report of the	5	1	134
Surveyor General of Washington Territory. Annual report of the	5	1	140
Surveyors General for the year ending June 30, 1866. Estimates for appropriations for the support of the office of	5	2	28
T.			
Territories for the year ending June 30, 1866. Estimates for the support of governments in the	7	2	43
Treasurer, transmitting statement of receipts and expenditures of the Post Office Department for the year ending June 30, 1864. Letter from the United States	8	44	
Treasury, transmitting estimates for additional appropriations required to complete the service of the fiscal year ending June 30, 1865, and previous years. Letter from the Secretary of the	7	2	4
Treasury, transmitting estimates for appropriations, specific and indefinite, made by former acts of Congress, which may be required for the service of the last three quarters of the fiscal year ending June 30, 1865. Letter from the Secretary of the	7	2	6
Treasury, transmitting estimates for appropriations for the year ending June 30, 1866. Letter from the Secretary of the	7	2	7
Treasury, transmitting the number and names of persons employed in the coast survey during the fiscal year ending June 30, 1864. Letter from the Secretary of the	8	13	
Treasury, in relation to the transfers of appropriations. Letter from the Secretary of the	8	17	
Treasury, in relation to tax commissioners of Florida. Letter from the Secretary of the	8	18	
Treasury, transmitting statement of the disbursement of the contingent fund in that department for the year ending June 30, 1864. Letter from the Secretary of the	8	21	
Treasury, in answer to a resolution of the House of Representatives in relation to the transit of goods to and from Canada. Letter from the Secretary of the	8	28	
Treasury, transmitting an account of the receipts and expenditures in the Treasury Department. Letter from the Secretary of the	8	37	
Treasury. Annual report of the Secretary of the	7	3	1
Papers accompanying the above report.			
The Secretary's report	7	3	1

Title.	Vol.	No.	Page.
Statement No. 1. Receipts and expenditures for the fiscal year ending June 30, 1864	7	3	31
Statement No. 2. Receipts and expenditures as estimated for the fiscal year ending June 30, 1866	7	3	32
Statement No. 3. Duties, revenues, and public expenditures during the fiscal year ending June 30, 1864, agreeably to warrants issued, exclusive of trust funds	7	3	33
Statement No. 4. Receipts and expenditures for the quarter ending September 30, 1864, exclusive of trust funds	7	3	39
Statement No. 5. The indebtedness of the United States	7	3	40
Statement A. Report of the Comptroller of the Currency	7	3	46
Statement B. Report of the Commissioner of Internal Revenue	7	3	56
Statement C. Report of the Treasurer	7	3	73
Statement D. Report of the Register	7	3	79
Statement E. Report of the Solicitor	7	3	83
Statement F. Report of the First Comptroller	7	3	92
Statement G. Report of the Second Comptroller	7	3	94
Statement H. Report of the First Auditor	7	3	96
Statement I. Report of the Second Auditor	7	3	97
Statement J. Report of the Third Auditor	7	3	100
Statement K. Report of the Fourth Auditor	7	3	105
Statement L. Report of the Fifth Auditor	7	3	111
Statement M. Report of the Sixth Auditor	7	3	134
Statement N. Report of the Commissioner of Customs	7	3	136
Statement O. Report of the Supervising Architect	7	3	152
Statement P. Report of the Light-House Board	7	3	163
Statement Q. Report of the Superintendent of the Coast Survey	7	3	174
Statement R. Report of the Supervising Inspector of Steamboats	7	3	177
Statement S. The Mineral Lands and Mines of the United States	7	3	180
Statement T. Revenue from Mineral Lands	7	3	191
Statement U. Report of the Director of the Mint	7	3	210
Statement No. 6. Gold, silver, and copper coinage at the mint of the United States in the several years from its establishment in 1792, and the coinage at the branch mints and the New York assay office from their organization to June 30, 1864	7	3	233
Statement No. 7. Amount of the public debt on the first day of January in each of the years from 1791 to 1842 inclusive, and at various dates in subsequent years to July 1, 1864	7	3	236
Statement No. 8. Revenue collected from the beginning of the government to June 30, 1864, under the several heads of customs, internal revenue, direct tax, postage, public lands, and miscellaneous sources, with the receipts from loans and treasury notes, and the total receipts	7	3	238
Statement No. 9. Expenditures from the beginning of the government to June 30, 1864, under the several heads of civil list, foreign intercourse, Navy Department, War Department, pensions, Indian department, and miscellaneous, with the interest and principal of the public debt, and total expenditures	7	3	240
Statement No. 10. Gross value of the exports and imports from the beginning of the government to June 30, 1864	7	3	242
Statement No. 11. Exports and imports of coin and bullion from 1821 to 1864 inclusive; also the excess of imports and exports during the same years	7	3	243
Statement No. 12. Foreign merchandise imported, exported, and consumed annually from 1821 to 1864; with the population and rate of consumption *per capita* calculated for each year	7	3	244
Statement No. 13. Value of domestic produce and foreign merchandise, exclusive of specie, exported annually from 1821 to 1864	7	3	245
Statement No. 14. Export of staple products, breadstuffs, provisions, oils, and animal products for five years	7	3	246
Statement No. 15. Value of leading articles of manufacture exported from 1847 to 1864	7	3	247
Statement No. 16. Amount of the tonnage of the United States annually from 1789 to 1864, inclusive; also the registered and enrolled and licensed tonnage employed in steam navigation each year	7	3	251

Title.	Vol.	No.	Page.
Statement No. 17. Receipts and expenditures of the marine hospital fund for the relief of sick and disabled seamen in the ports of the United States for the fiscal year ending June 30, 1864	7	3	253
Statement No. 18. Amount expended at each custom-house in the United States during the fiscal year ending June 30, 1864	7	3	259
Statement No. 19. Number of persons employed in each district of the United States for the collection of customs during the fiscal year ending June 30, 1864, with their occupation and compensation	7	3	262
Statement No. 20. General results of all receipts and disposal of merchandise within the United States during the fiscal year ending June 30, 1864	7	3	277
Statement No. 21. Liabilities of the United States to various Indian tribes under stipulations of treaties, &c	7	3	280
Statement No. 22. Stocks held in trust by the United States for the Chickasaw national fund and the Smithsonian Institution	7	3	293
Statement No. 23. Rules and regulations concerning commercial intercourse with and in States and parts of States declared in insurrection, and the collection and disposition of captured and abandoned property, &c	7	3	294
Statement No. 24. General regulations for the purchase of products of the insurrectionary States on government account	7	3	345
Treasury Department, Printing Bureau of the. Letter from the Secretary of the Treasury in regard to the	8	50	
Treasury, transmitting a list of clerks and other persons employed in the Treasury Department during the year 1864. Letter from the Secretary of the	13	63	
Treasury Department, Printing Bureau of the, additional papers relating to the. Letter from the Secretary of the Treasury, transmitting	13	64	
Treasury, transmitting statement of the receipts and expenditures for the year ending June 30, 1864. Letter from the Secretary of the	13	73	
V.			
Vanderbilt, steamer, statement of the amount paid for the. Letter from the Secretary of War, transmitting	13	78	
Veteran Reserve Corps for the year ending December 31, 1863. Report of medical statistics of the	14	83	90
Volunteers, one-hundred-days, from Ohio and other States. Letter from the Secretary of War in relation to	8	33	
Volunteers. Letter from the Secretary of War in relation to slaves enlisted as	8	38	
W.			
War. Annual report of the Secretary of	12	83	1
Papers accompanying the above.			
Report of the Adjutant General	14	83	15
Report of the Chief Engineer of the Army	14	83	29
Report of the Commissary General of Subsistence	14	83	46
Report of the Judge Advocate General	14	83	48
Report of the Provost Marshal General	14	83	49
Report of the medical statistics of the Veteran Reserve Corps for the year ending December 31, 1863	14	83	90
Report of the Surgeon General	14	83	97
Report of the Paymaster General	14	83	100
Report of the Chief of Ordnance of the War Department	14	83	112
eport of the Quartermaster General	14	83	119
Papers accompanying the above report.			
No. 1. The report of Brigadier General Rufus Ingalls, chief quartermaster of the armies operating against Richmond for 1864. (Inclosures.) His annual report for fiscal year ending June 30, 1863,			

Title.	Vol.	No.	Page.
and a copy of report regarding the operations of the quartermaster's department during the battle of Chancellorsville	14	83	146
No. 2. Copy of letter from Robert H. Ramsey, A. A. G., to Brevet Brigadier General J. L. Donaldson, chief quartermaster department of the Cumberland, by order of the major general commanding	14	83	167
No. 3. Extract from annual report of Captain James M. Moore, assistant quartermaster, depot of Washington, D. C., relating to the national cemeteries and the burial of deceased soldiers, and others dying in the service of the United States in hospitals in and about Washington	14	83	168
No. 4. Abstract of appropriations for the quartermaster's department for the fiscal years 1862, 1863, 1864, and 1865, and including arrearages for 1861	14	83	172
No. 5. Monthly statement of clothing, camp and garrison equipage, reported on hand at the various depots for 1st July, 1864	14	83	173
No. 6. Report of principal articles of clothing and equipage received at the principal purchasing and manufacturing depots during the fiscal year ending June 30, 1864	14	83	181
No. 7. List of vessels owned by the United States, October 15, 1864, (sea steamers)	14	83	181
No. 8. Statement of vessels chartered or employed by the quartermaster's department during the fiscal year ending June 30, 1864	14	83	181
War, transmitting estimates for the support of the War Department for the year ending June 30, 1866. Letter from the Secretary of	7	2	20
War, in relation to the purchase of products in States declared in insurrection. Letter from the Secretary of	8	16	
War, in relation to the apportionment of naval recruits among the different enrolment districts. Letter from the Secretary of	8	30	
War, relative to the exchange of prisoners. Letter from the Secretary of	8	32	
War, in answer to resolution of the House of Representatives relative to one-hundred-days men from Ohio and other States. Letter from the Secretary of	8	33	
War, in answer to a resolution of the House relative to amounts paid for commutation by persons illegally drafted. Letter from the Secretary of	8	34	
War, in answer to a resolution of the House in relation to compensation to owners of slaves enlisted as volunteers. Letter from the Secretary of	8	38	
War, in relation to payments to the Illinois Central Railroad Company. Letter from the Secretary of	8	39	
War, relative to the publication of the Army Register. Letter from the Secretary of	8	40	
War, in relation to the duties and allowances of Major General H. W. Halleck. Letter from the Secretary of	8	41	
War, in answer to a resolution of the House in relation to the assignment of officers in the Quartermaster's department. Letter from the Secretary of	8	42	
War, respecting recruits to fill up old regiments. Letter from the Secretary of	8	43	
War, in answer to a resolution of the House calling for report of General Dix relative to the rebel raid on Lake Erie. Letter from the Secretary of	8	45	
War, transmitting a list of officers in the Subsistence department. Letter from the Secretary of	8	46	
War Department, contingent expenses of the. Letter from the Secretary of War, transmitting a statement of the	8	49	
War, relative to exemption from military duty of certain preachers of the gospel. Letter from the Secretary of	13	53	
War, in answer to resolution of the House calling for a record of the trial by court-martial of Major David H. Hastings. Letter from the Secretary of	13	54	
War, declining to furnish copy of letter of General George W. Morgan relative to evacuation of Cumberland Gap. Letter from the Secretary of	13	69	
War, transmitting a statement of the number of troops furnished by the State of California. Letter from the Secretary of	13	77	
War, transmitting statement of the amount paid for the steamer Vanderbilt prior to its presentation to the government. Letter from the Secretary of	13	78	

Title.	Vol.	No.	Page.
War, relative to kidnapping colored men in the District of Columbia. Letter from the Secretary of	13	79	
War, relative to the enlistment of rebel prisoners. Letter from the Secretary of	13	80	
War, transmitting abstract of contracts made by the Quartermaster's department. Letter from the Secretary of	14	84	
War, transmitting statement of expenditures from the contingent fund of his department for the year ending June 30, 1864. Letter from the Secretary of	14	85	
Warden of the jail. Report of the	5	1	774
Washington Territory. Annual report of the Surveyor General of	5	1	140
Winslow, John A., Captain. Message of the President recommending a vote of thanks to	8	6	
Y.			
Yards and Docks, Bureau of. Report of the chief of the	6	1	753
Yards and Docks for the year ending June 30, 1866. Estimates for appropriations for the support of the Bureau of	7	2	37

38TH CONGRESS, 2d Session. } HOUSE OF REPRESENTATIVES. { Ex. Doc. No. 51.

REPORT

OF THE

COMMISSIONER OF PATENTS

FOR THE YEAR 1864.

ARTS AND MANUFACTURES.

VOLUME II.

WASHINGTON:
GOVERNMENT PRINTING OFFICE.
1866.

ILLUSTRATIONS.

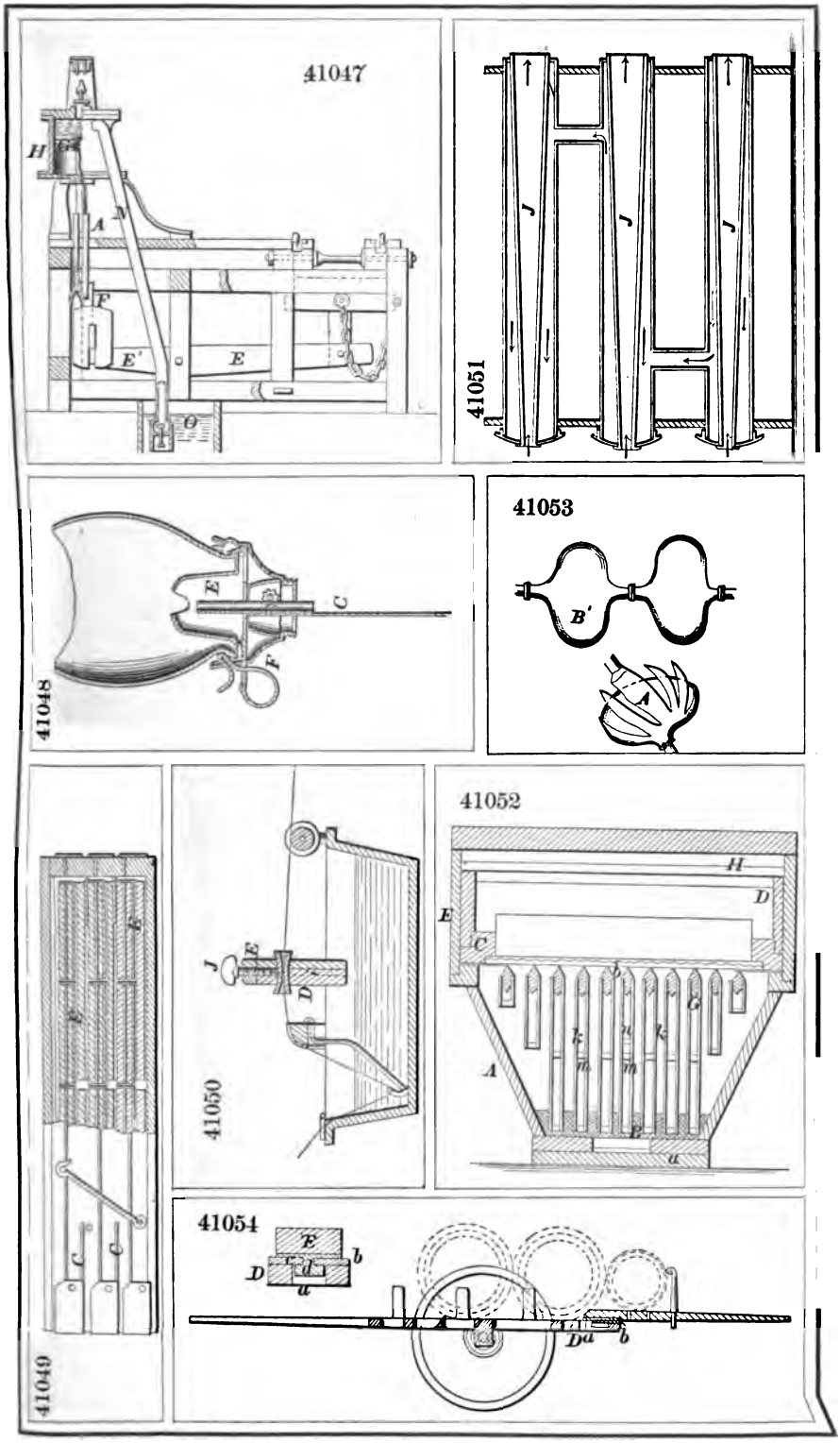
41047
41051
41048
41053
41052
41050
41049
41054

41055

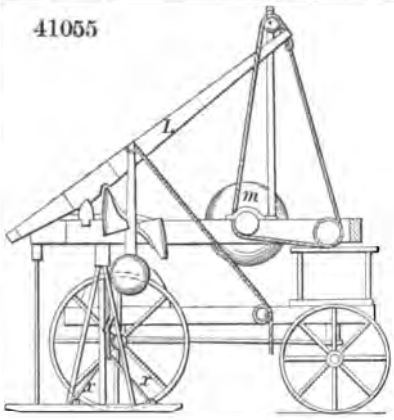

41058

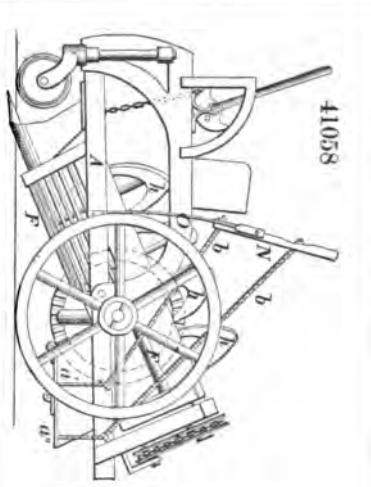

41056

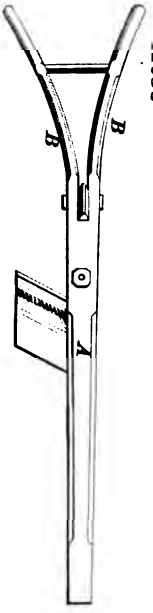

41057

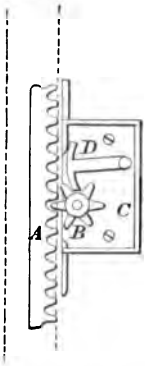

41059

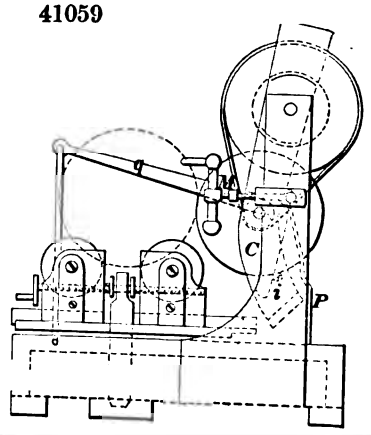

41061

41060

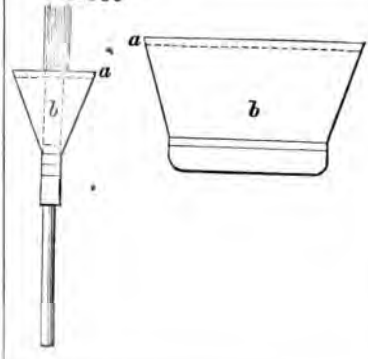

41062

41063

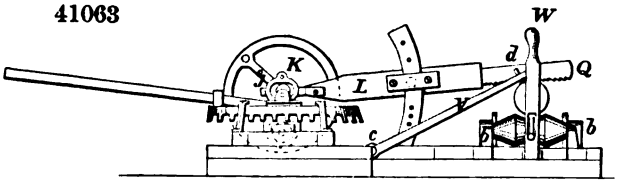

41069

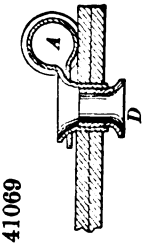

41064

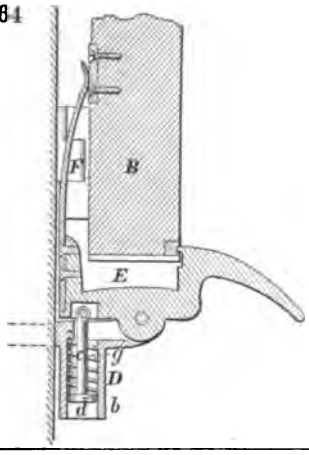

41065

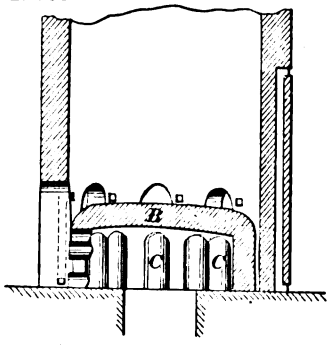

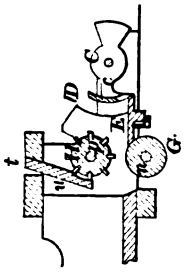

41067

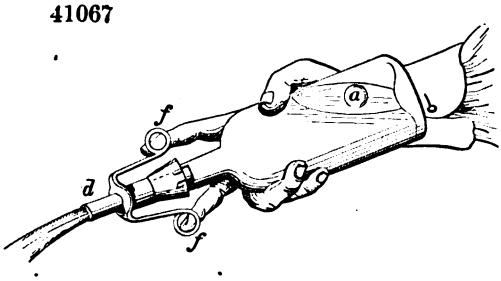

41070

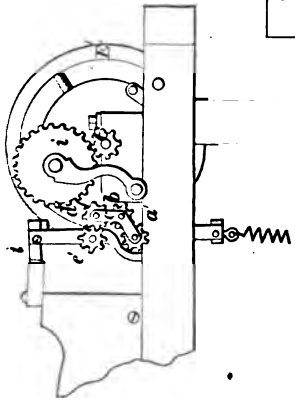

41071

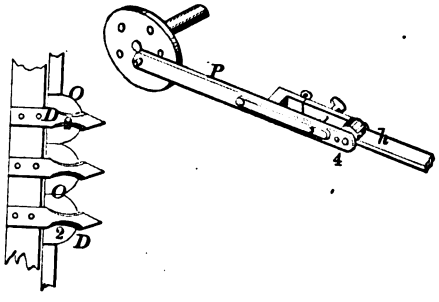

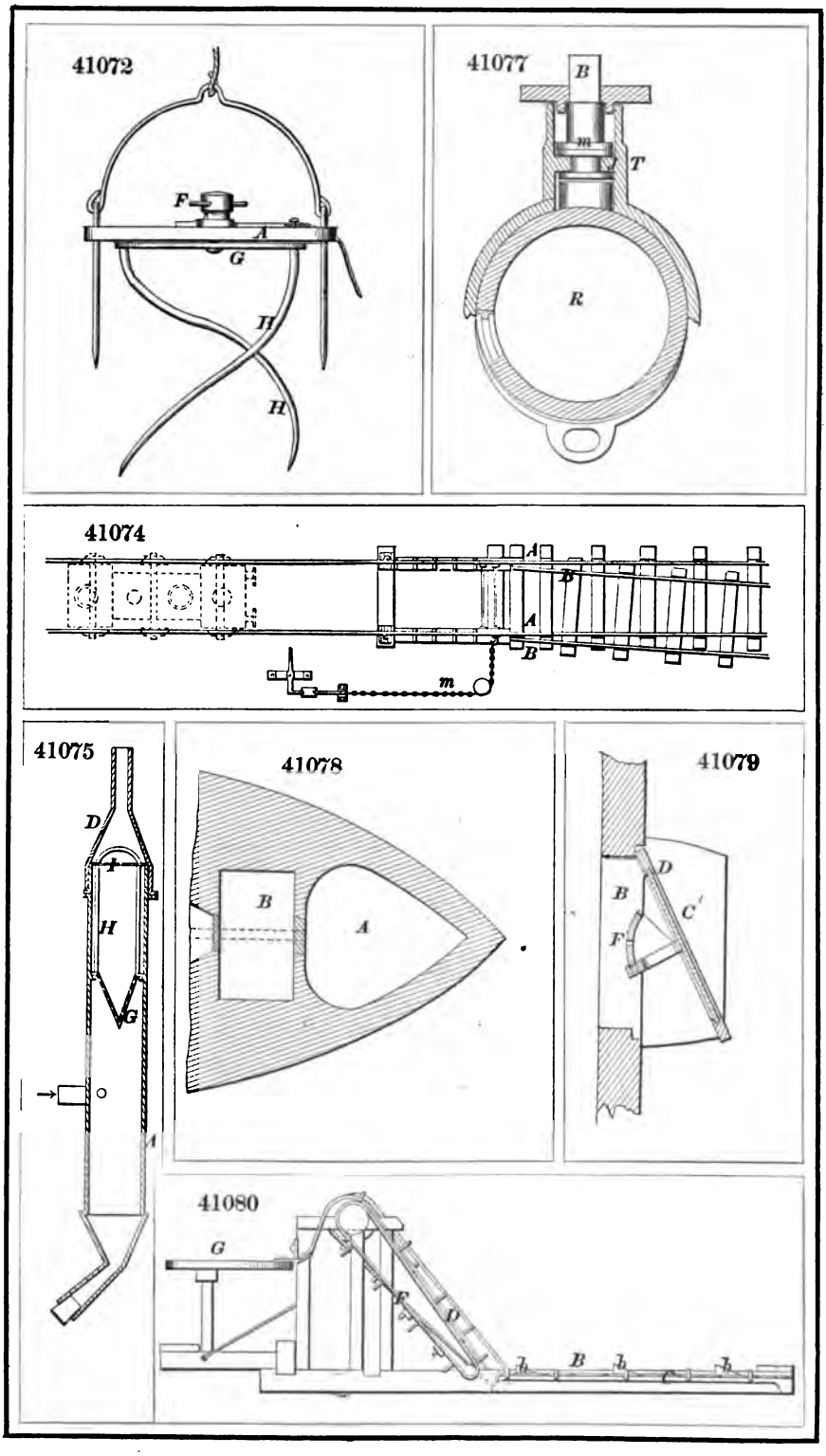
41072
F
A
G
H
H
41077
B
m
T
R
41074
A
B
A
B
m
41075
D
H
G
A
41078
B
A
41079
D
B
C'
F
41080
G
F
D
B

41081

41082

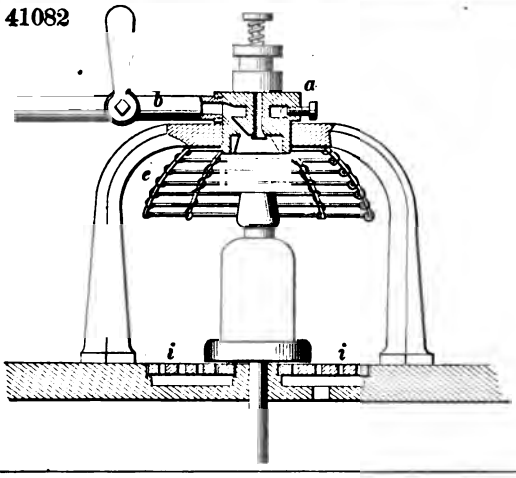

41083

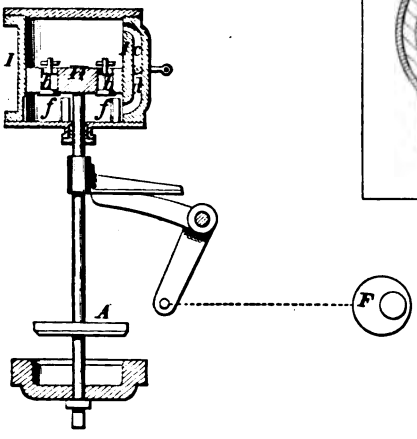

41084

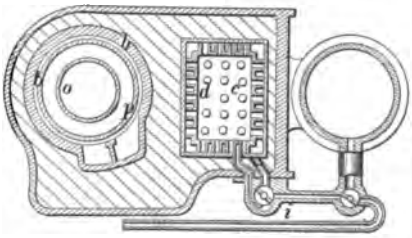

41087

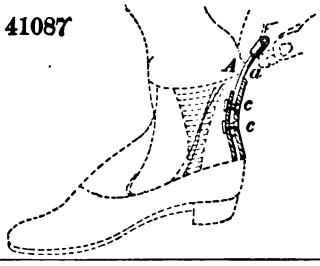

41086

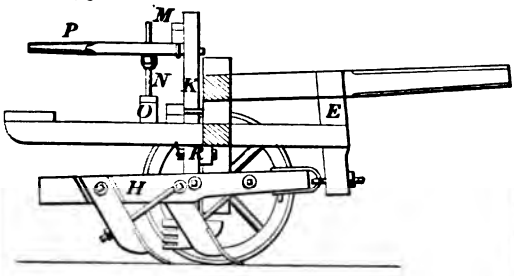

41088

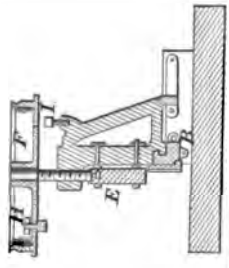

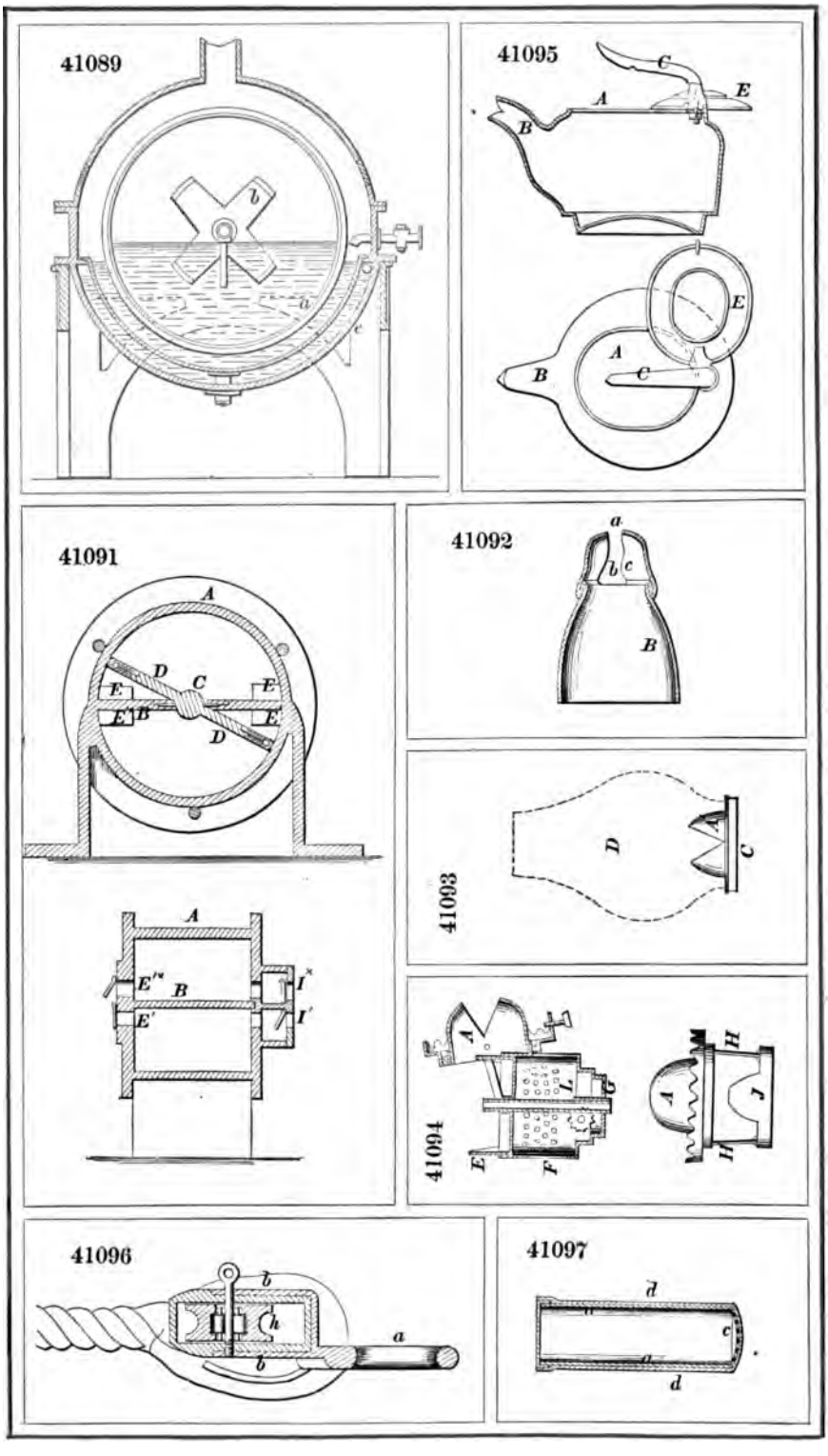
41089
41095
41091
41092
41093
41094
41096
41097

41098

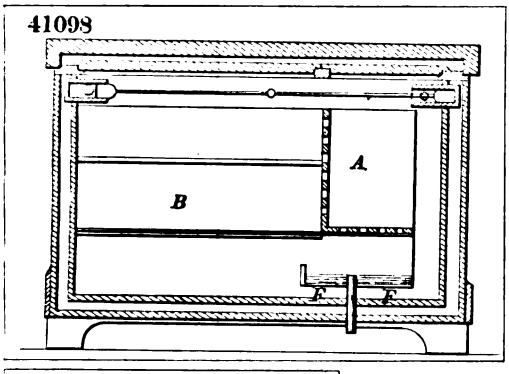

41099

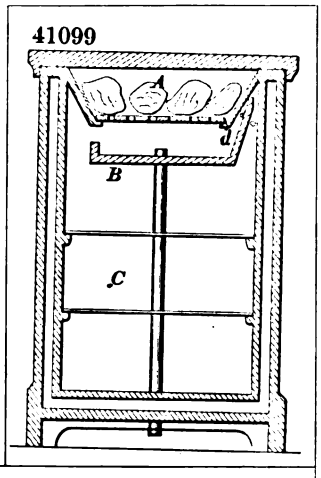

41102

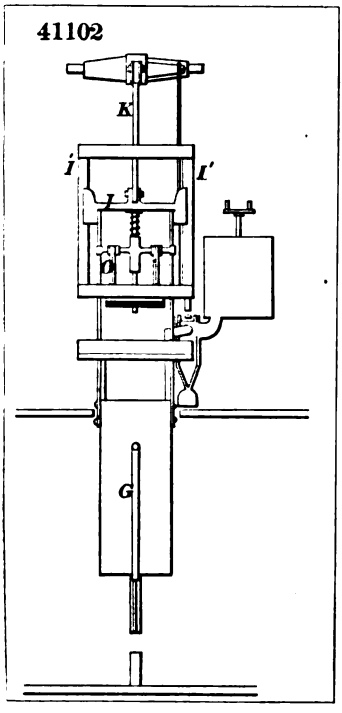

41104

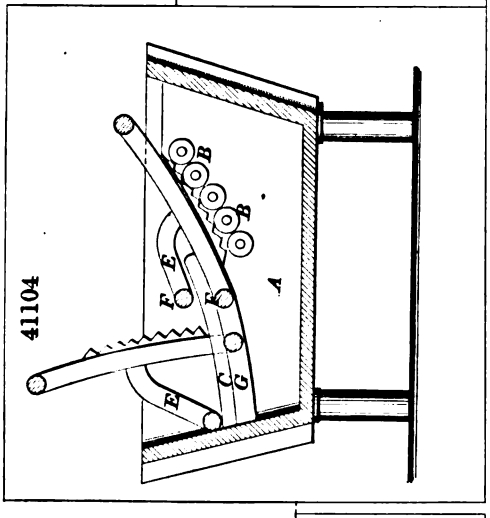

41100

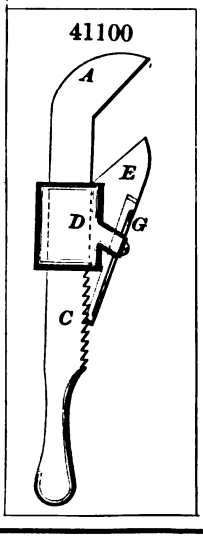

41103

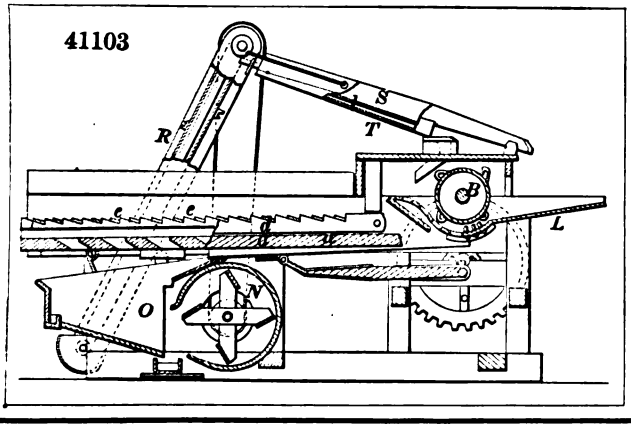

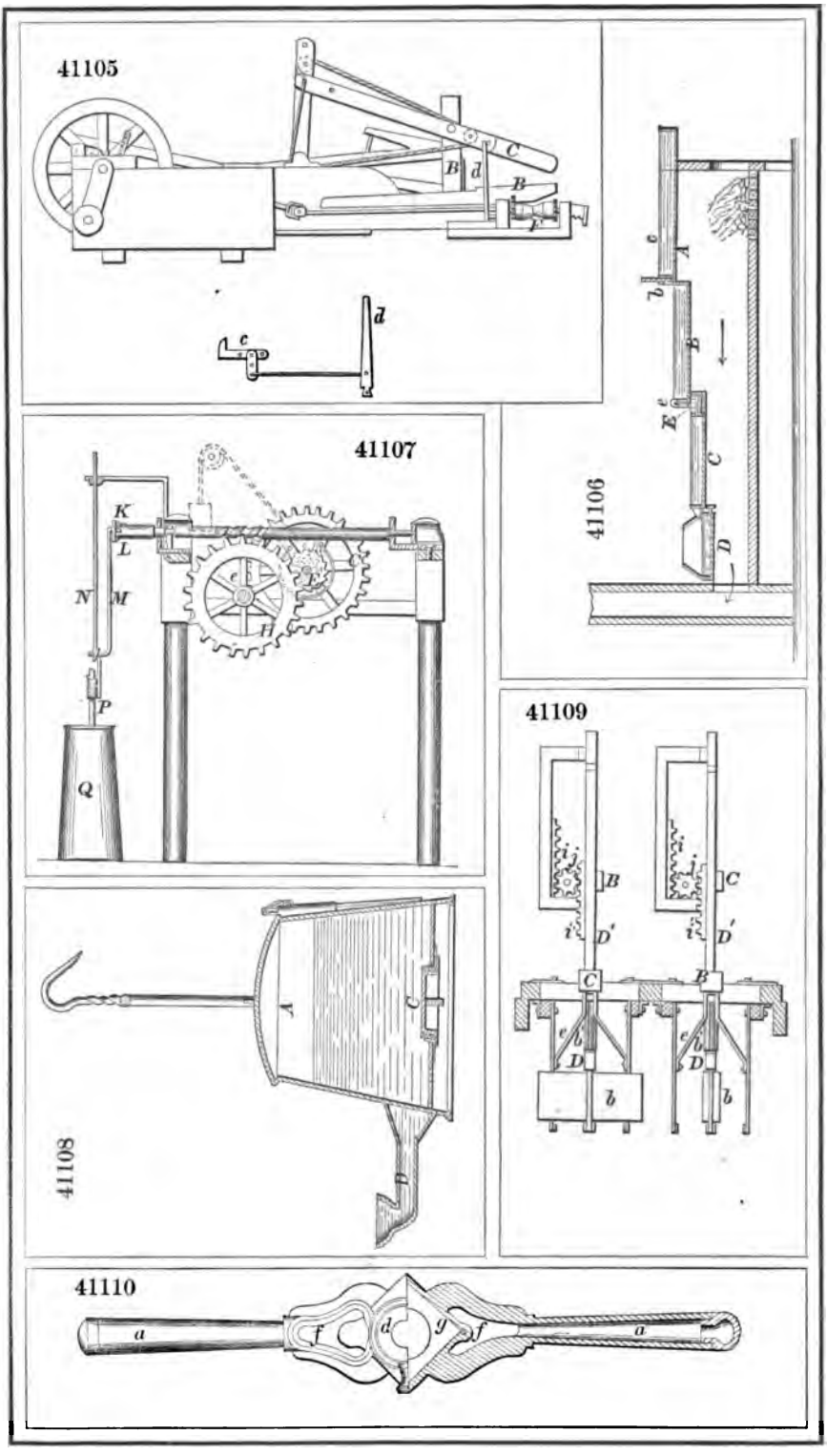
41105
41106
41107
41108
41109
41110

41112

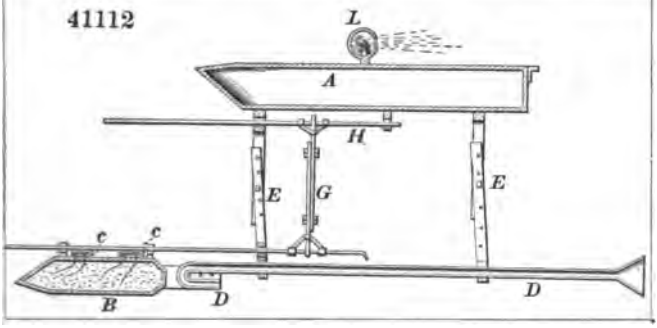

41117

41113

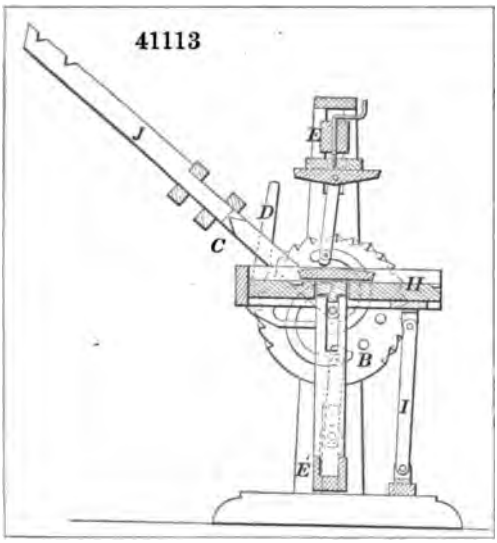

41114

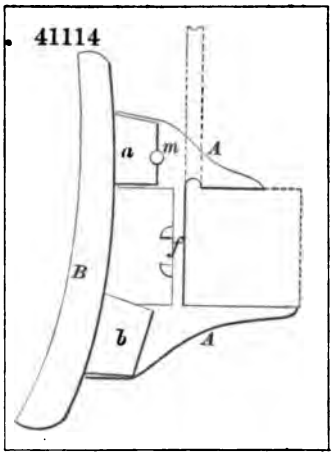

41115

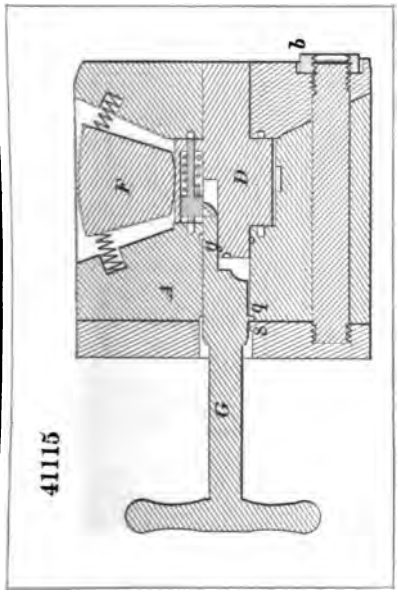

41116

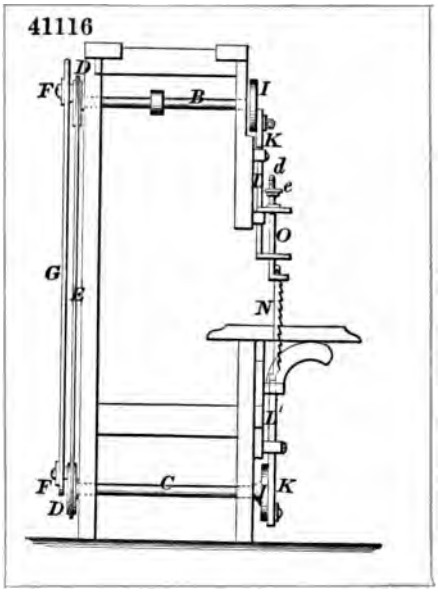

41118

41120

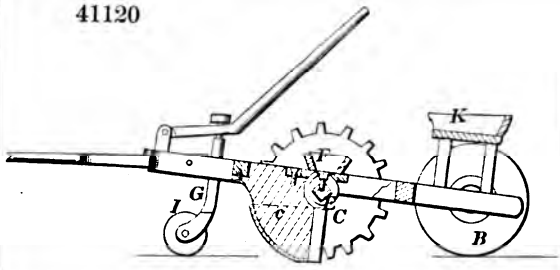

41121

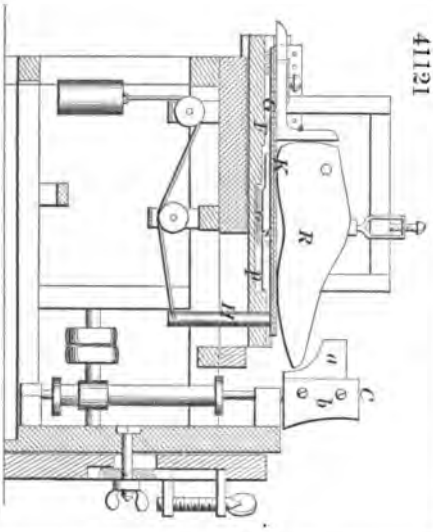

41123

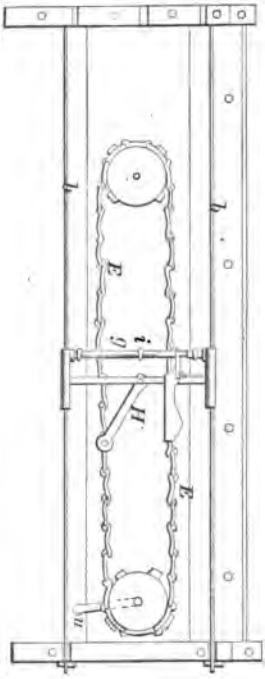

41122

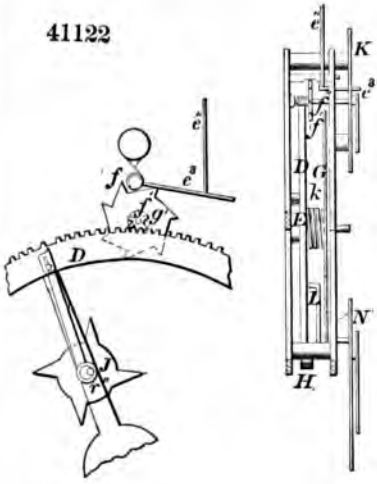

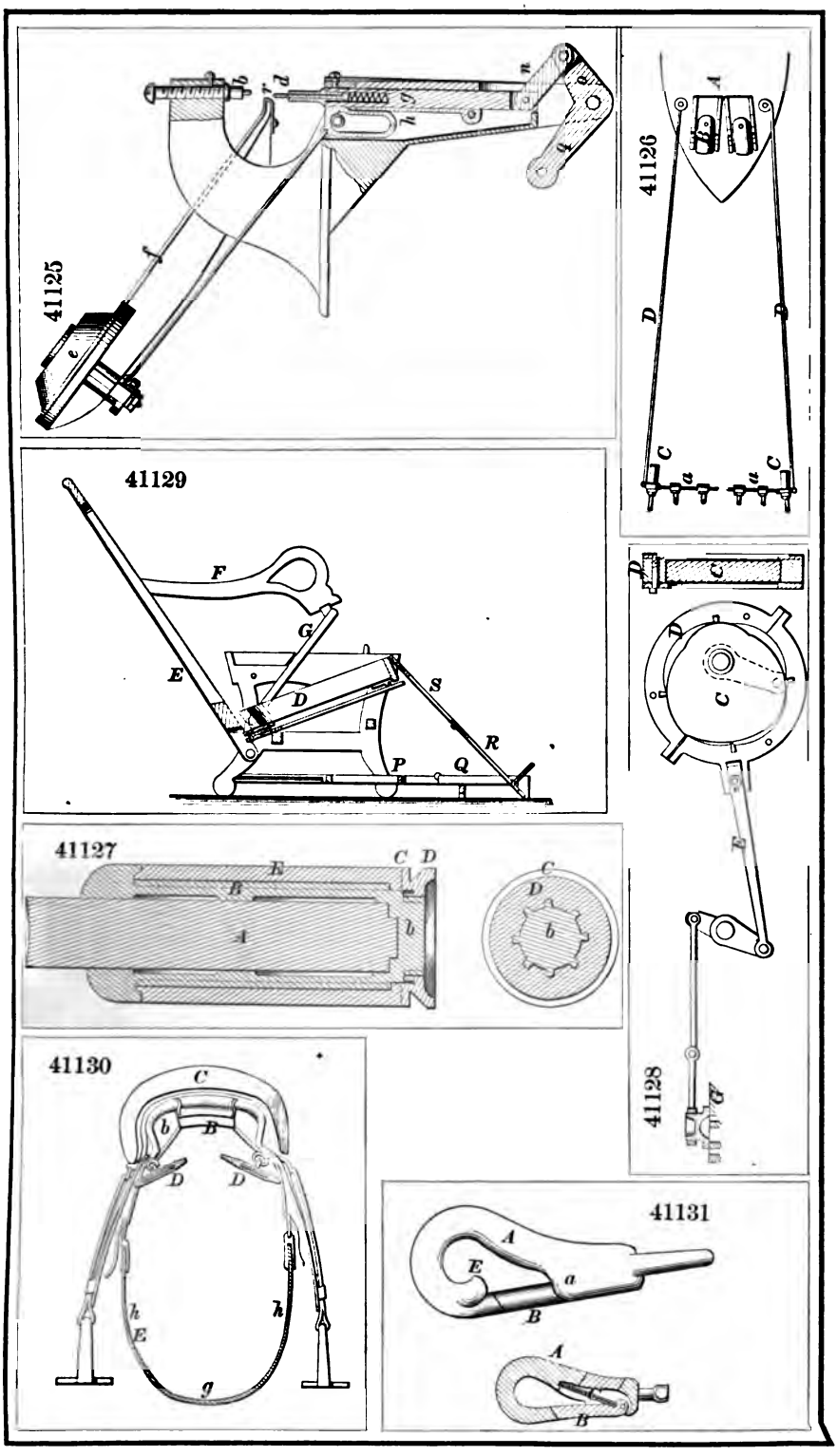
41125
41126
41129
41127
41128
41130
41131

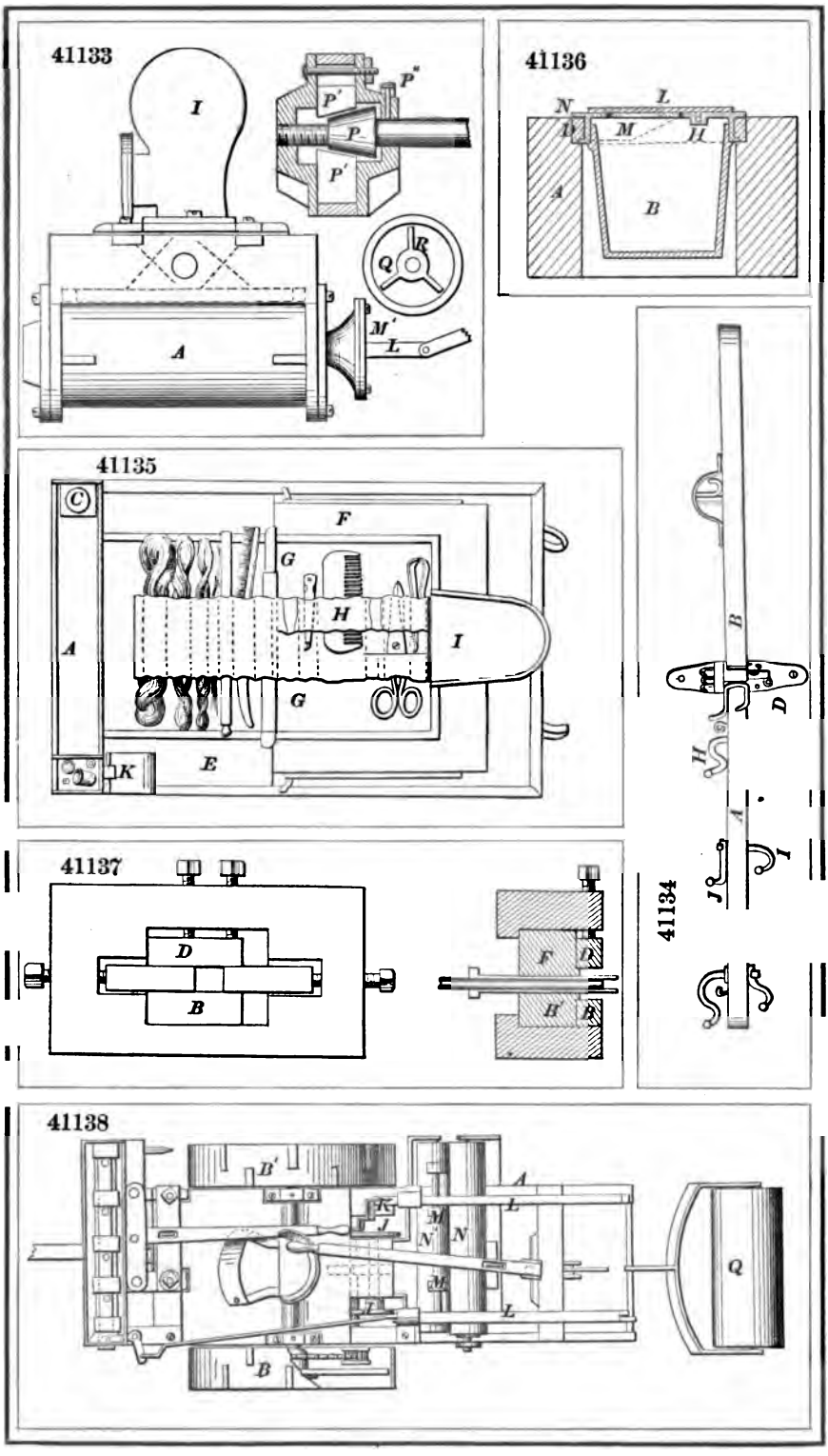
41133
I
P'
P''
P
P'
Q
R
M'
L
A
41136
N
L
D
M
H
A
B
41135
C
F
G
H
I
A
G
E
K
41134
B
D
H
A
I
J
41137
D
B
F
D
H
B
41138
B'
A
L
K
J
M
N'
N
M
T
L
B
Q

41139

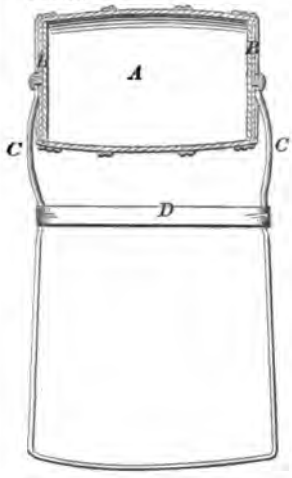

41140

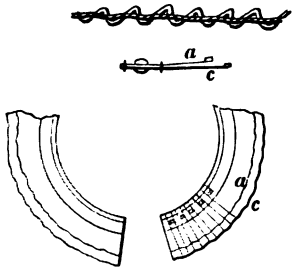

41141

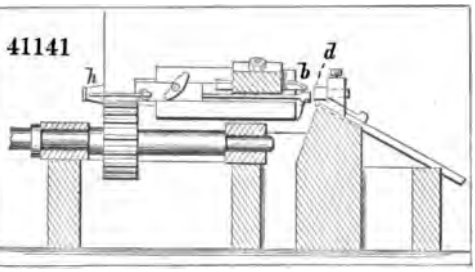

41142

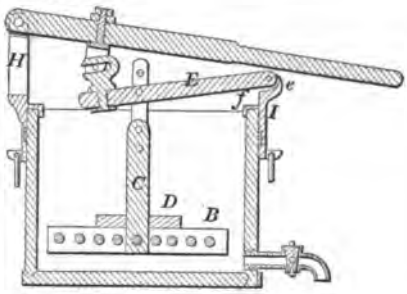

41143

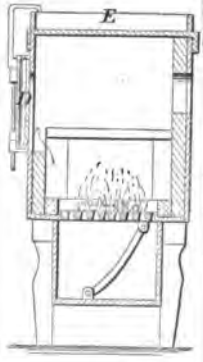

41145

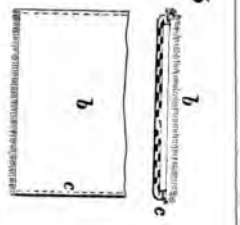

41144

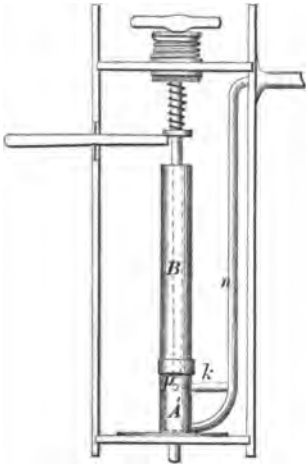

41146

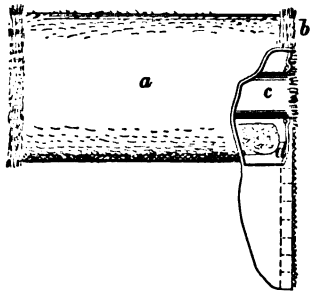

41147

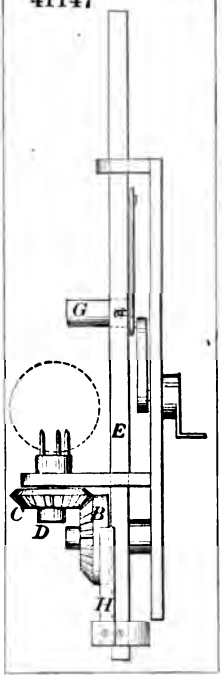

41154

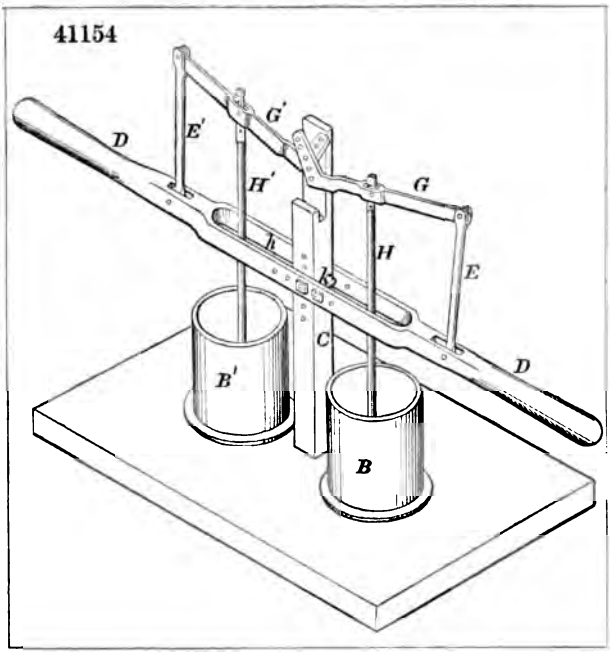

41148

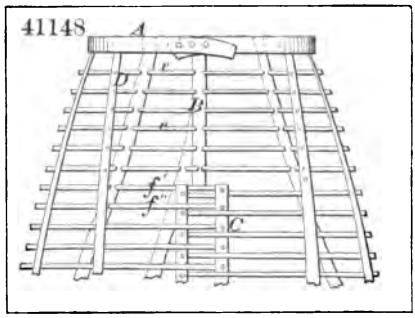

41149

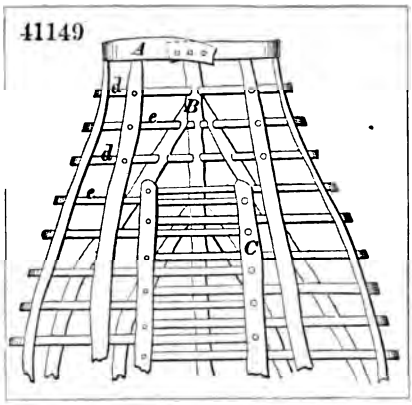

41152

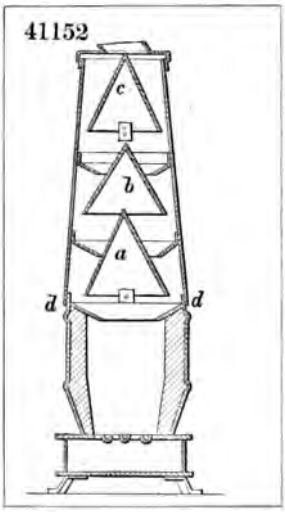

41150

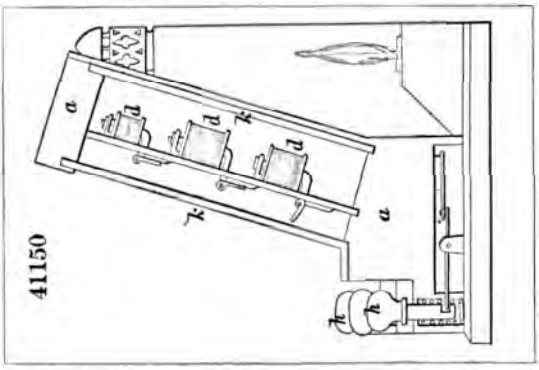

41155

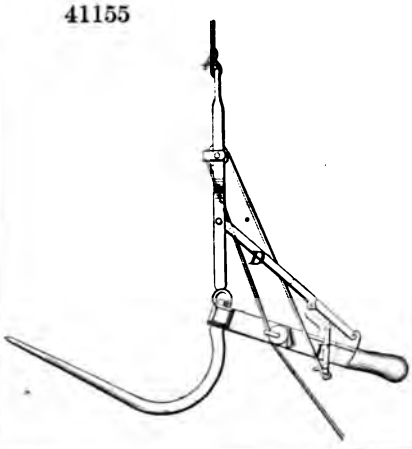

41156

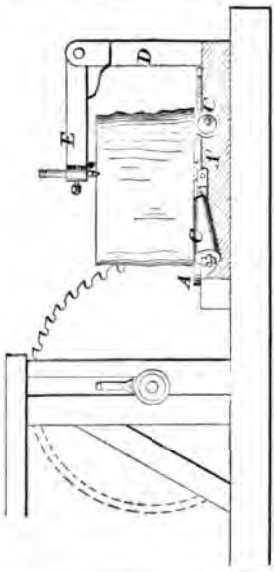

41159

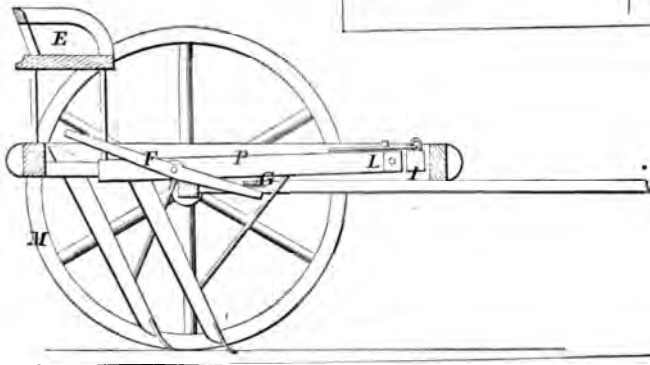

41158

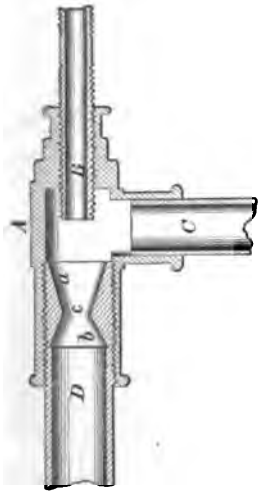

41157

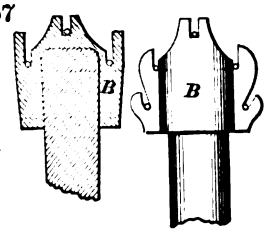

41160

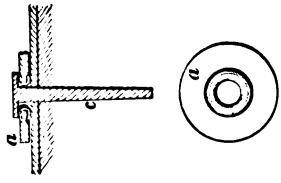

41161

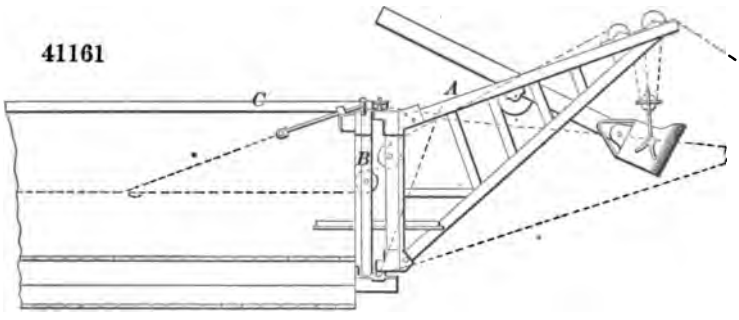

41162

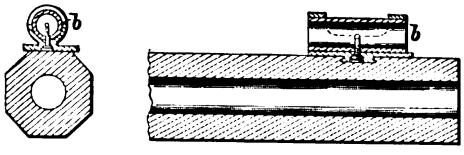

41163

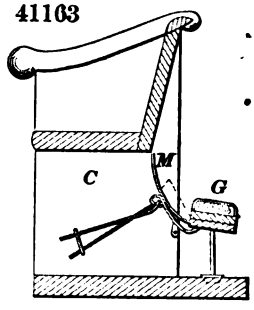

41164

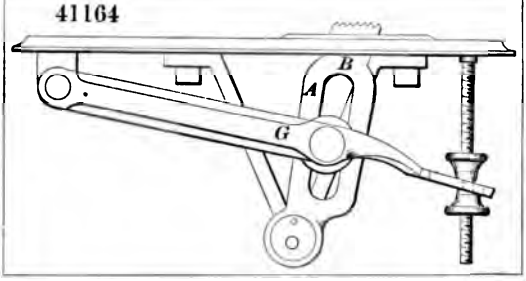

41167

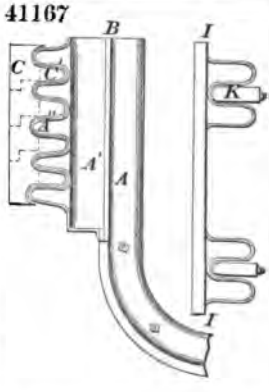

41165

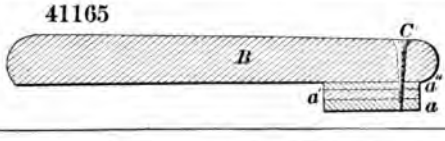

41166

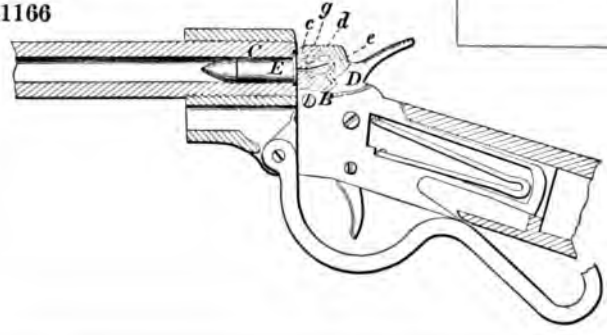

41168

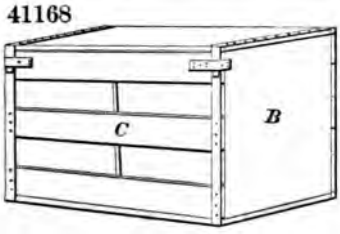

41170

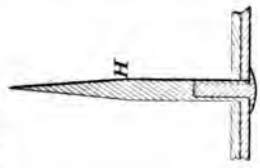

41169

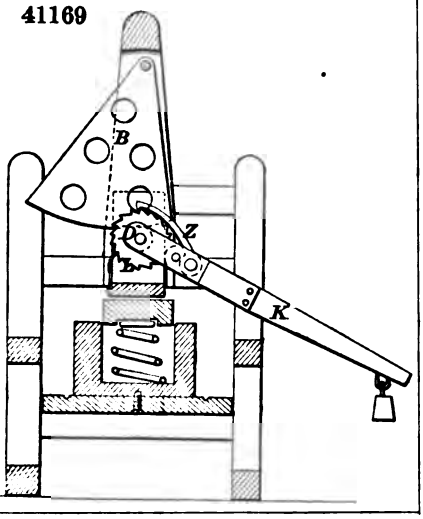

41171

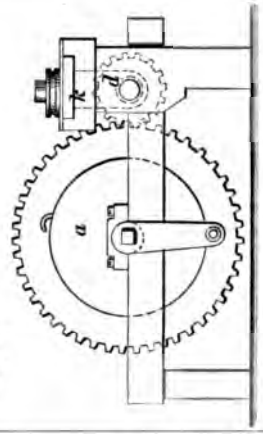

41172

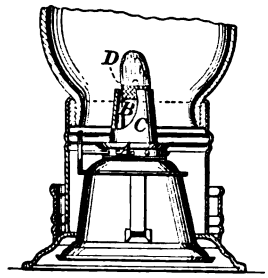

41174

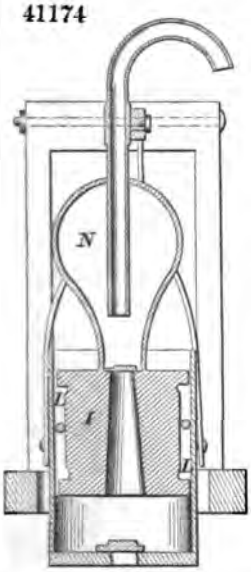

41173

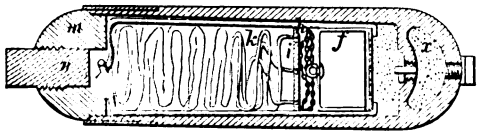

41175

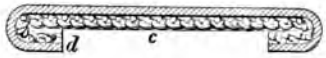

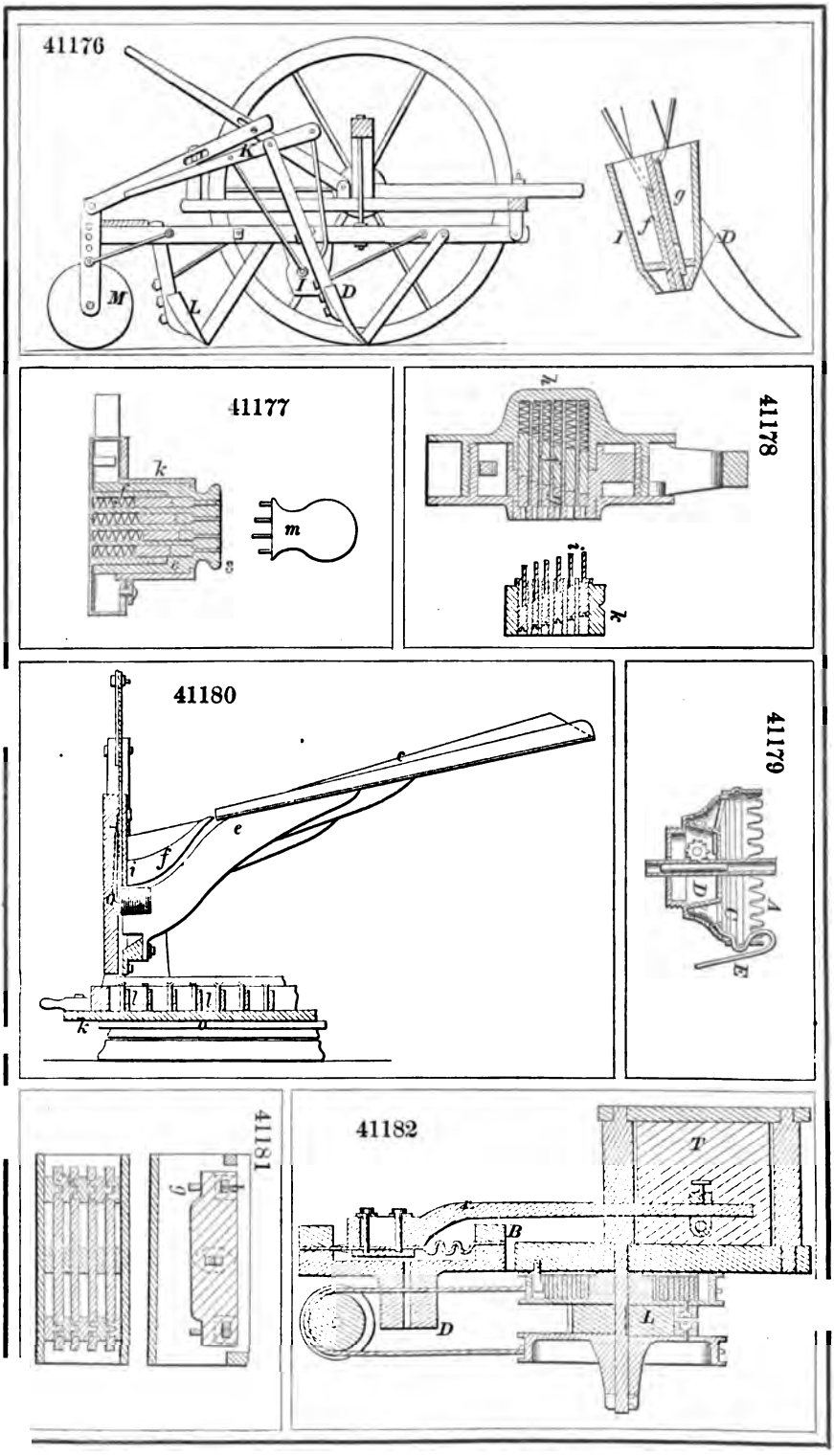
41176
41177
41178
41179
41180
41181
41182

41183

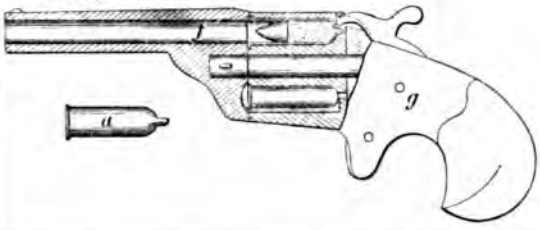

41186

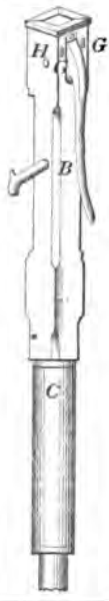

41187

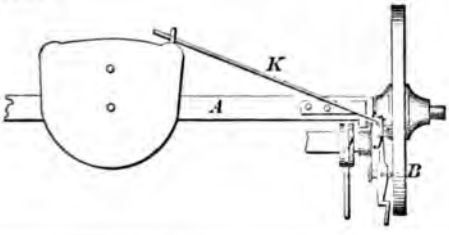

41189

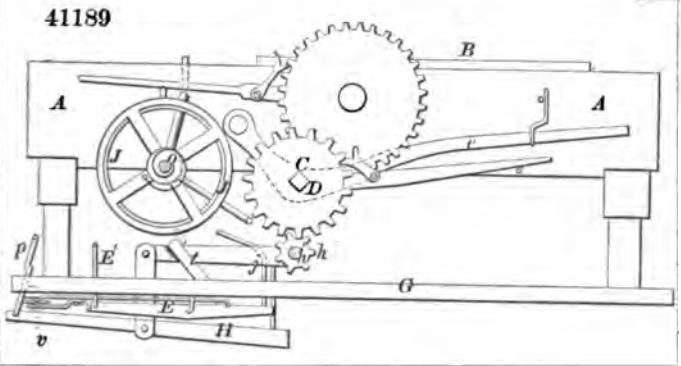

41191

41184

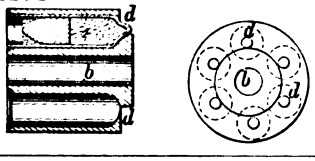

41190

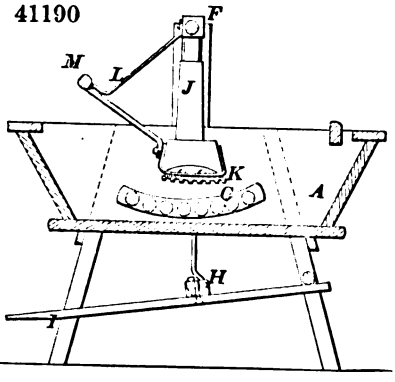

41188

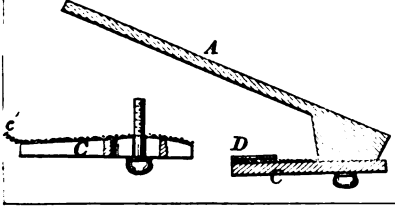

41192

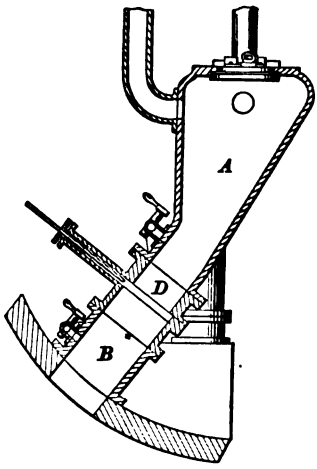

41194

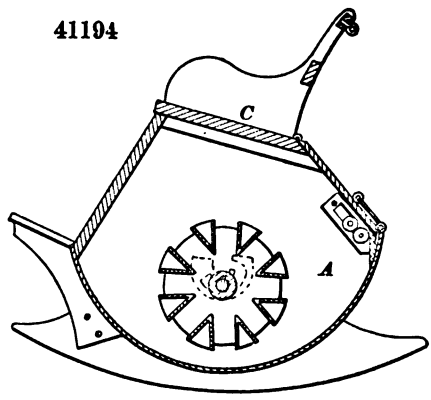

41193

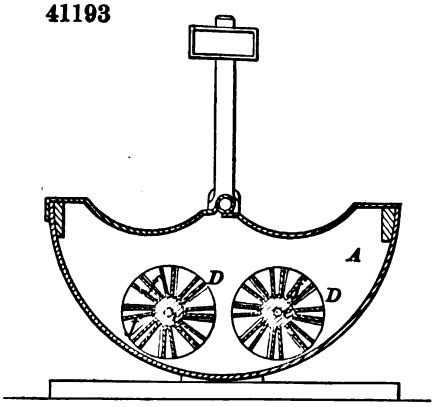

41195

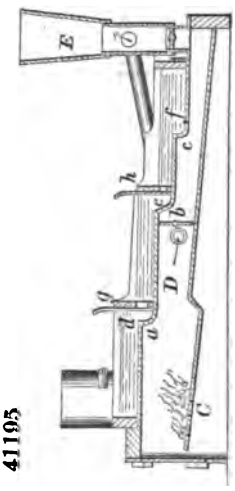

41196

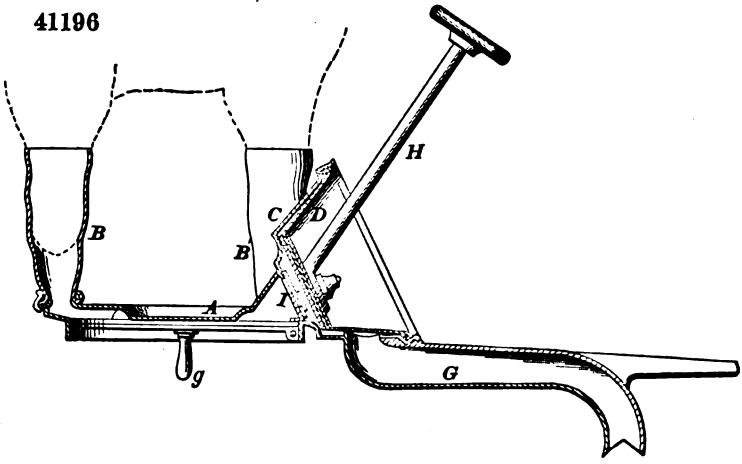

41198

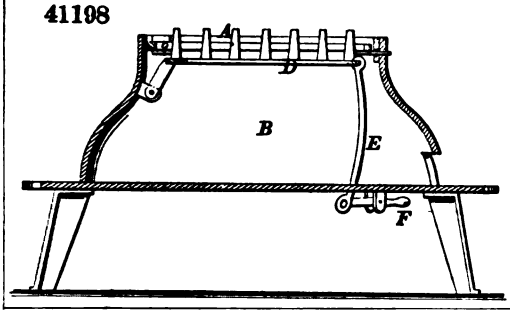

41201

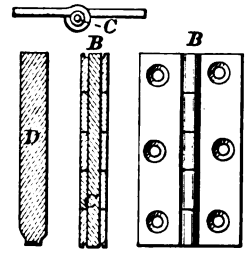

41199

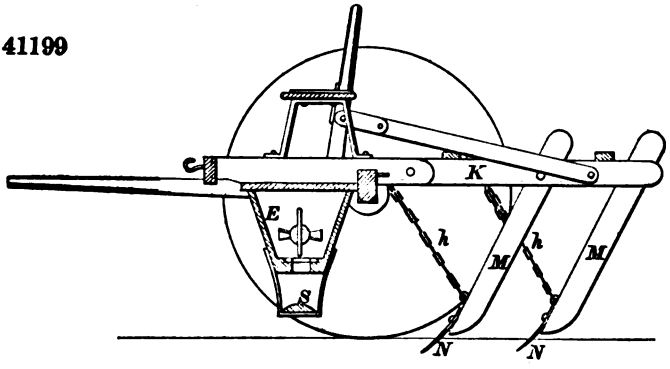

41200

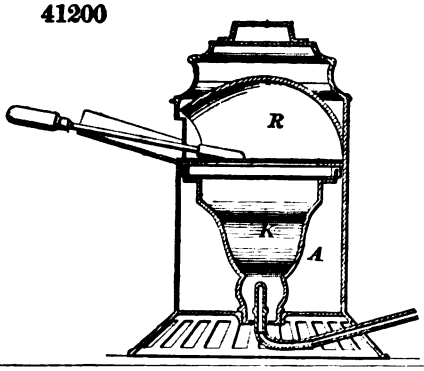

41202

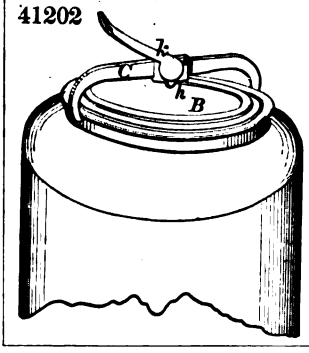

41205

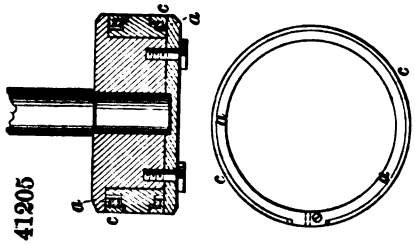

41204

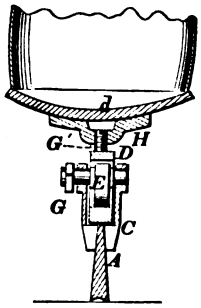

41206

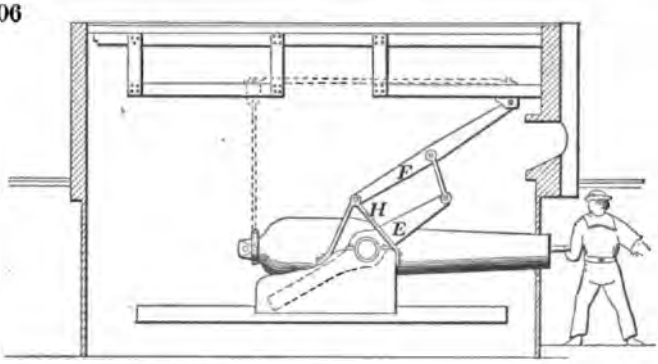

41207

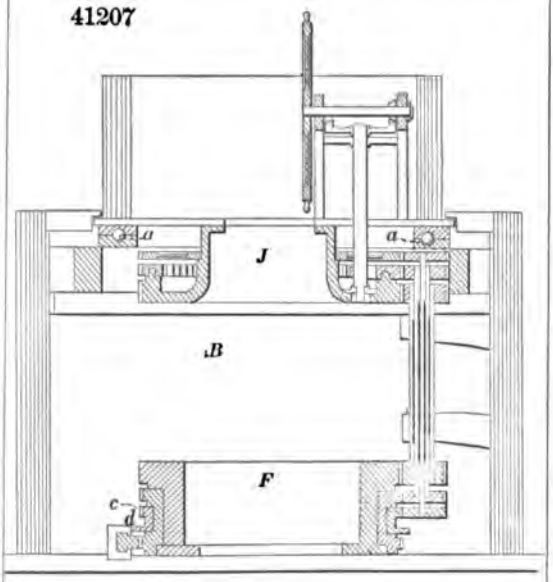

41208

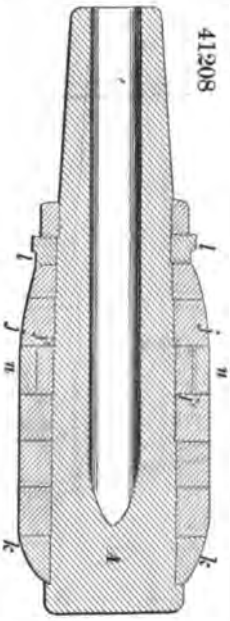

41209

41210

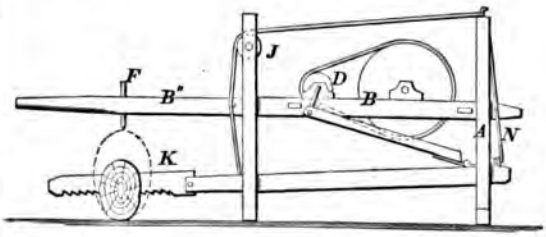

41211

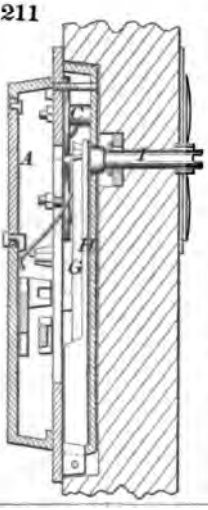

41214

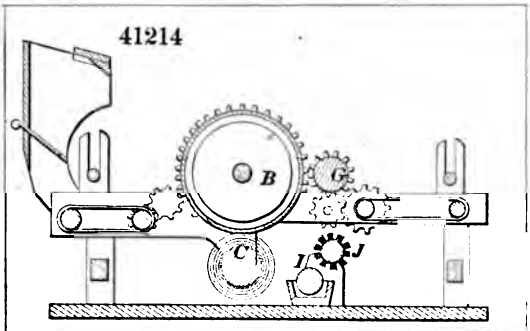

41215

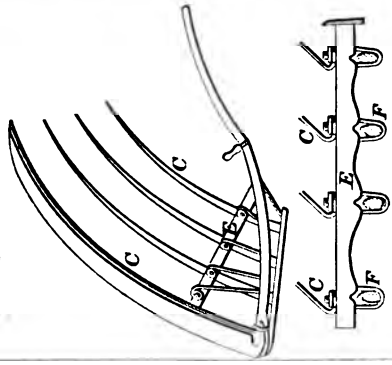

41212

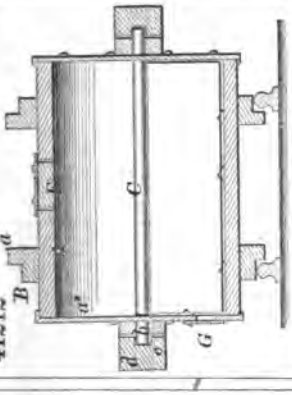

41217

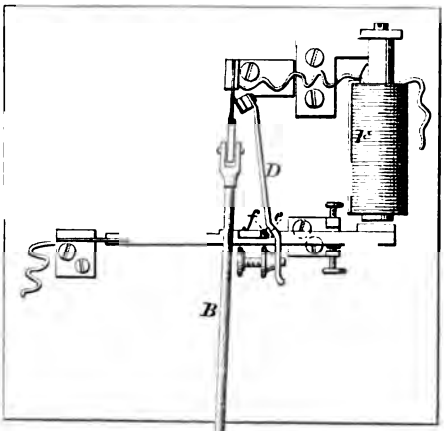

41216

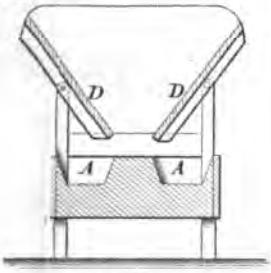

41213

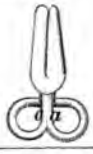

41219

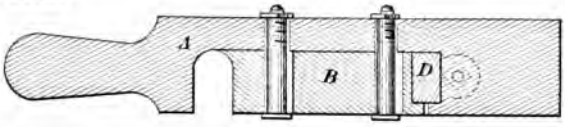

41220

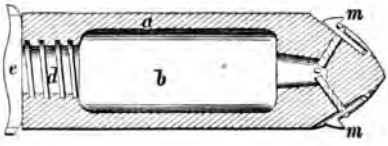

41221

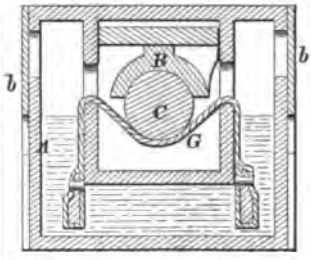

41223

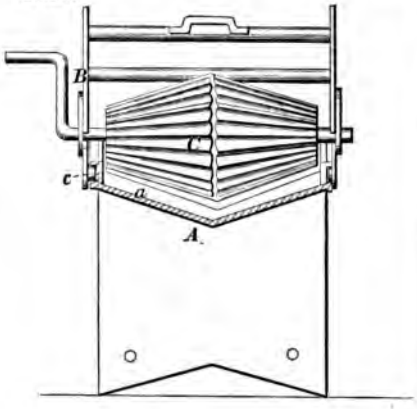

41222

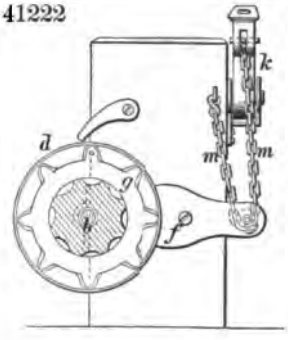

41224

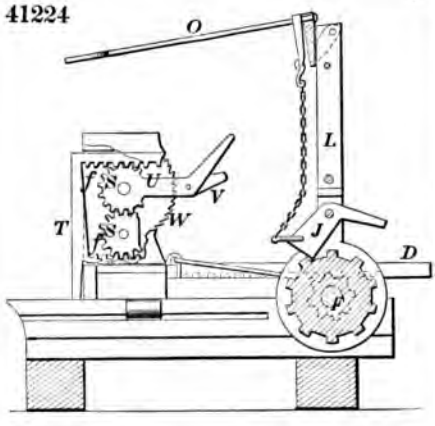

41225

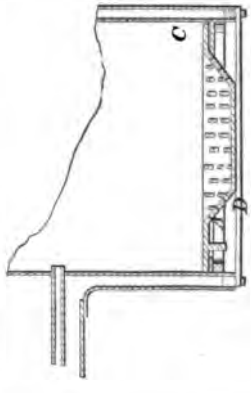

41226

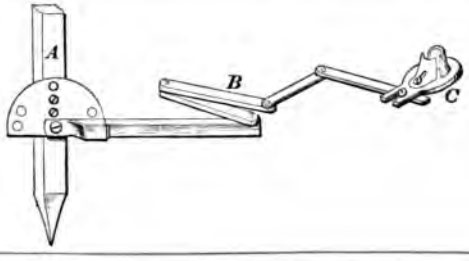

41227

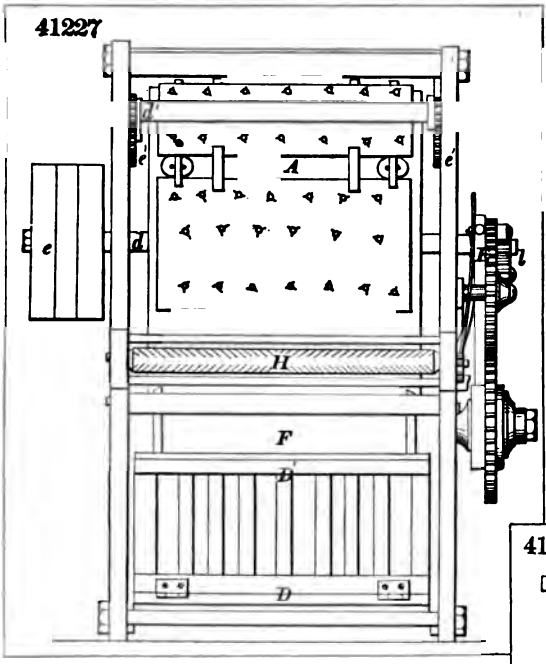

41231

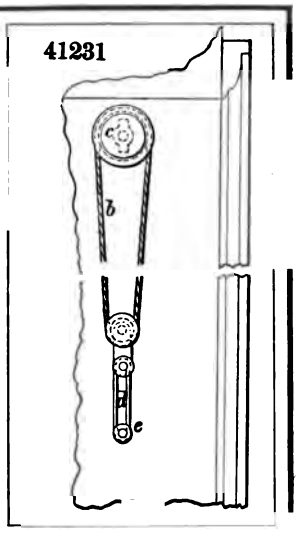

41229

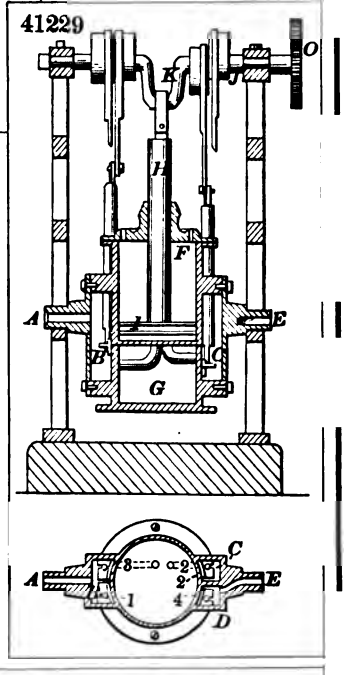

41228

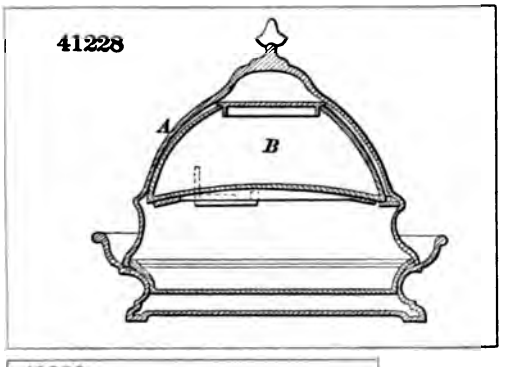

41230

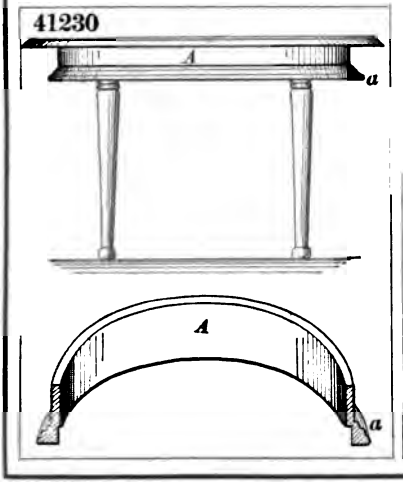

41232

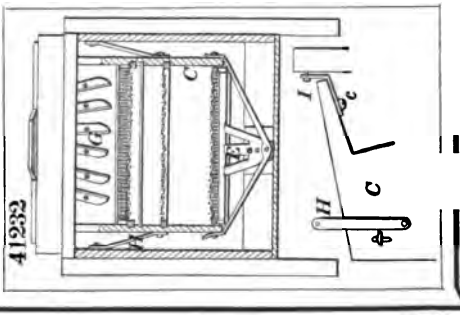

41233

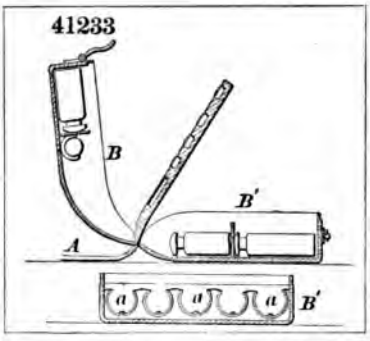

41237

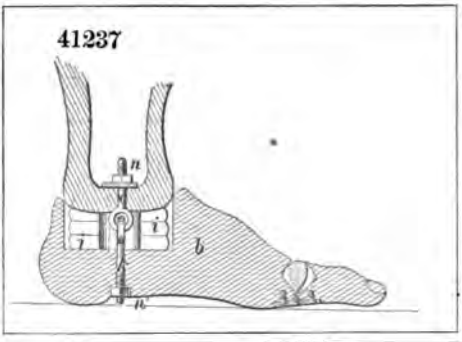

41234

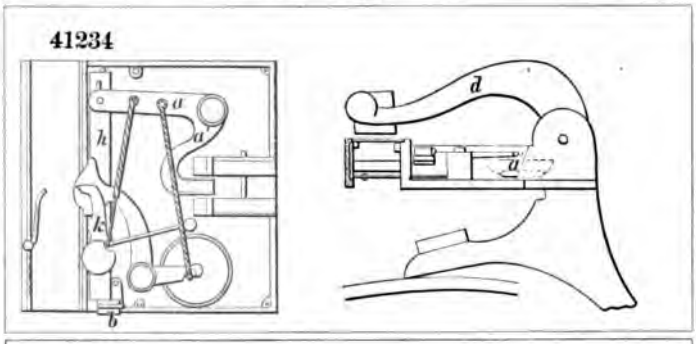

41238

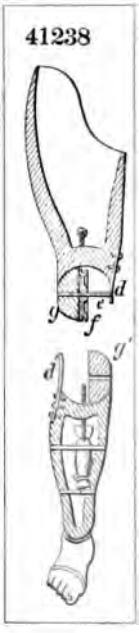

41235

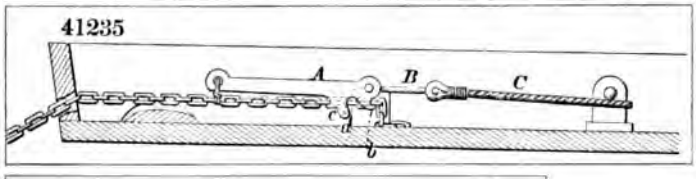

41239

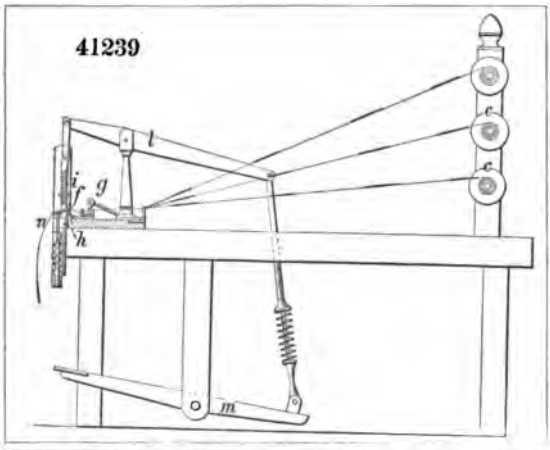

41236

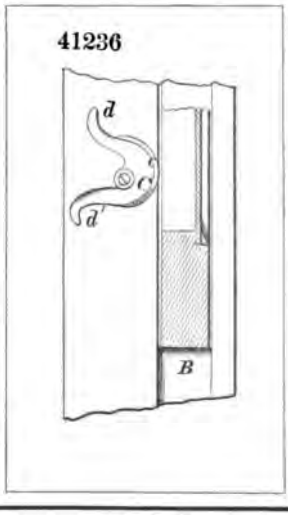

41240

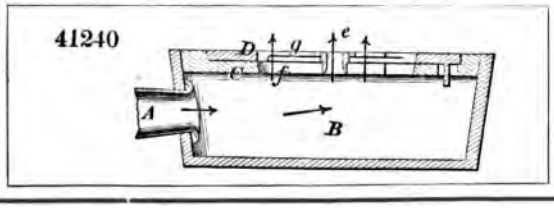

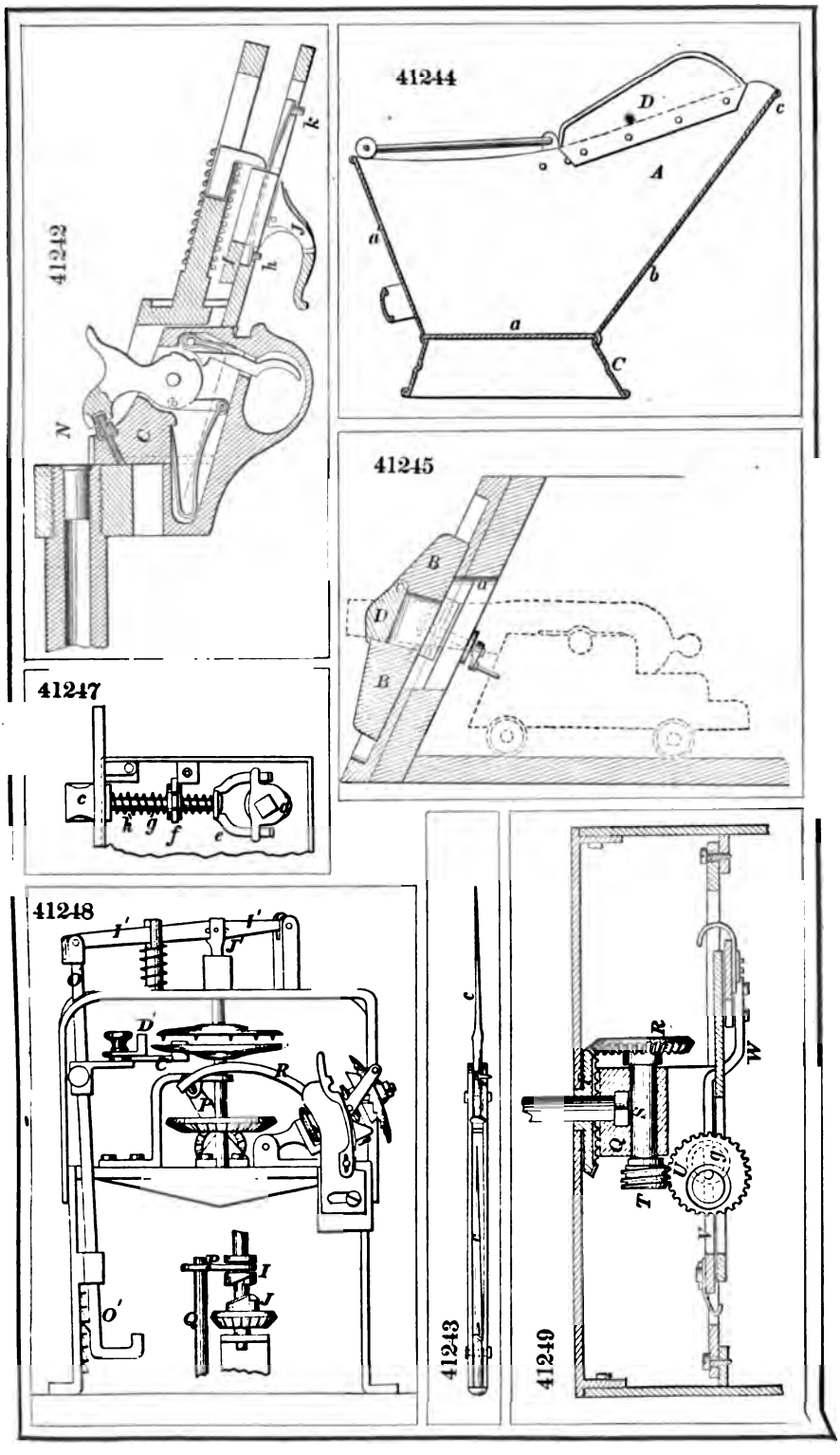
41246
41244
41245
41247
41248
41243
41249

41250

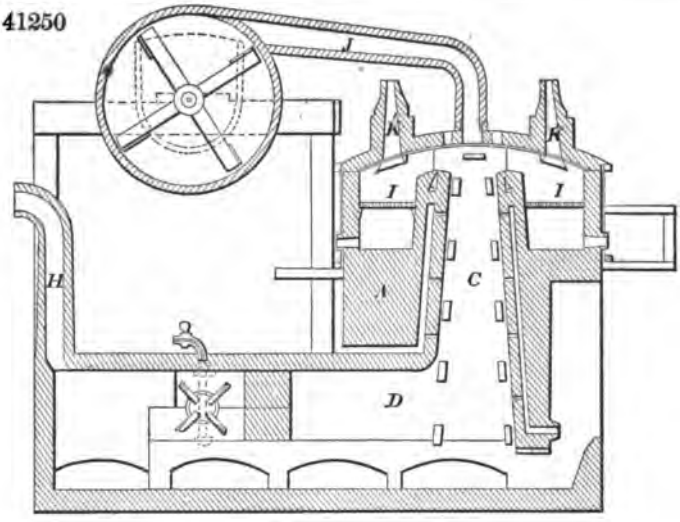

41251

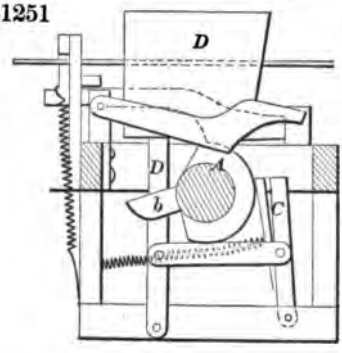

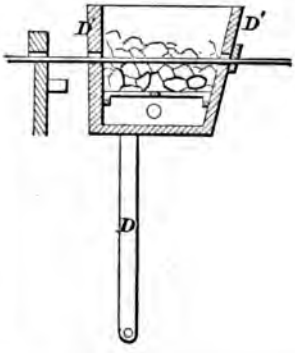

41252

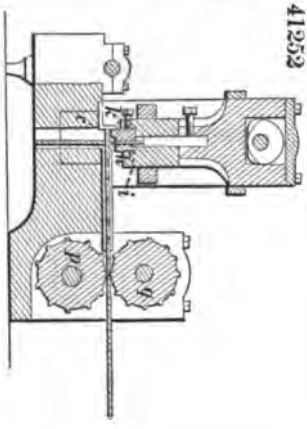

41253

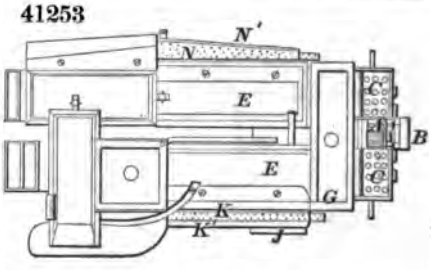

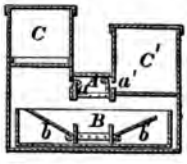

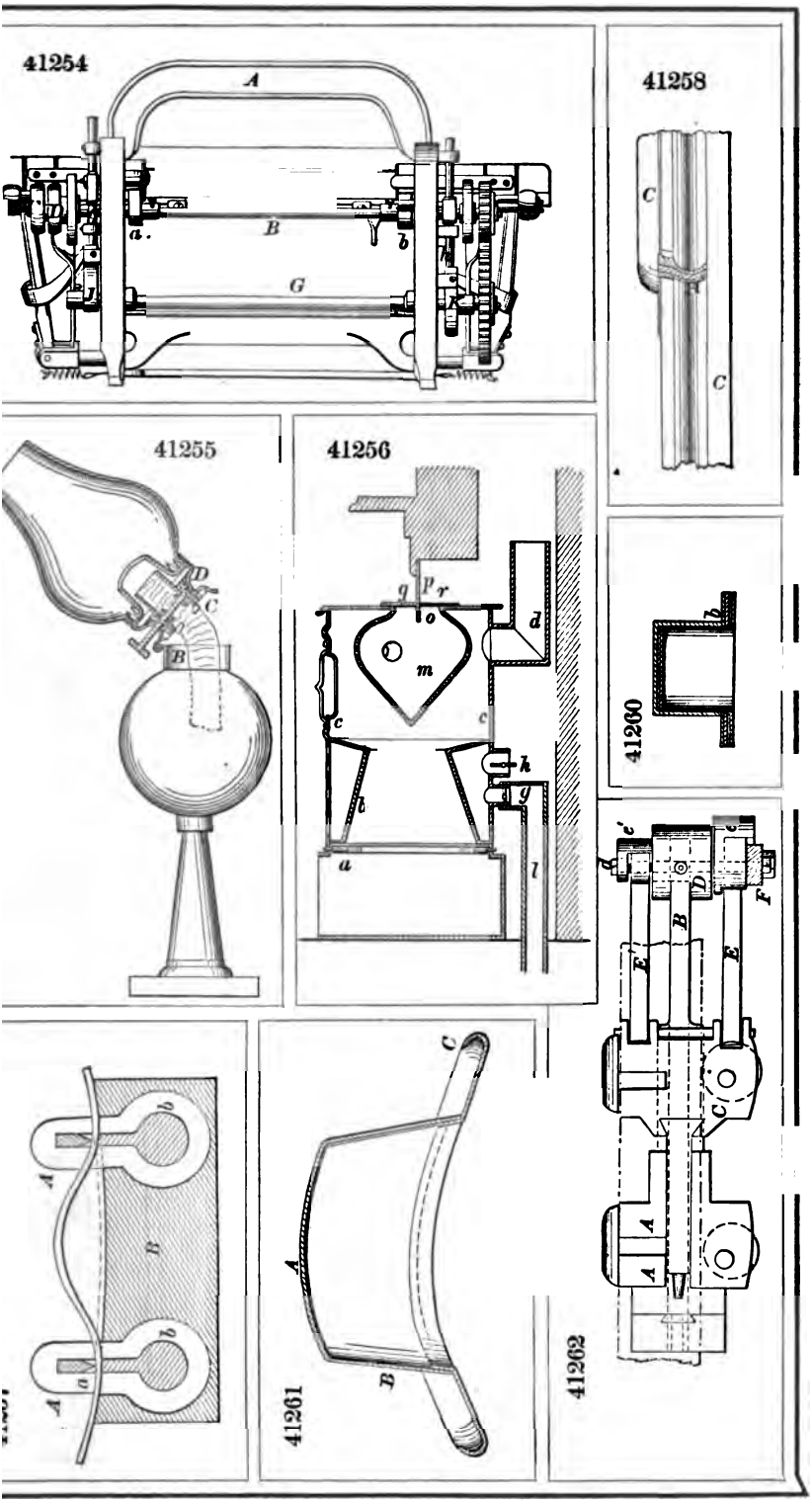
41254
A
B
G
a
b
41255
D
C
B
41256
q
p
r
o
m
d
c
c
h
g
l
a
41258
C
C
41260
b
41261
A
B
C
41262
A
A
B
C
D
E
E
F
c'
d
c
b
b
a
A
A
B

41263

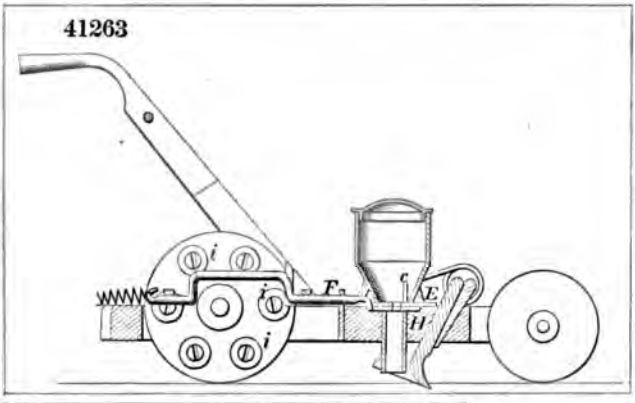

41267

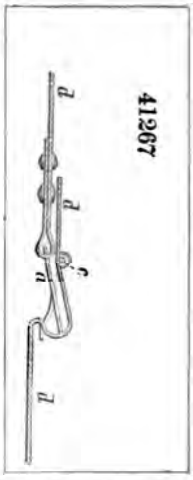

41264

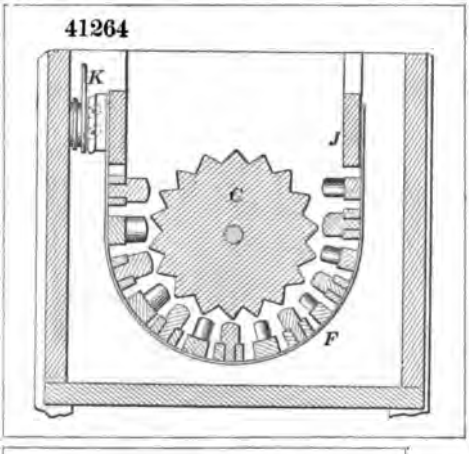

41266

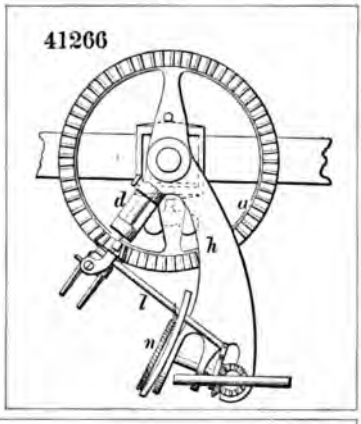

41265

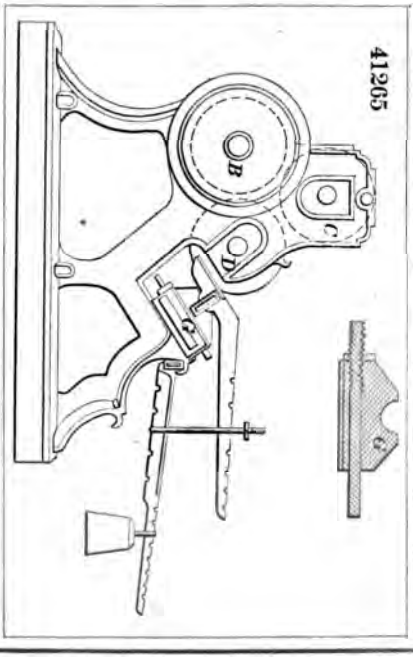

41268

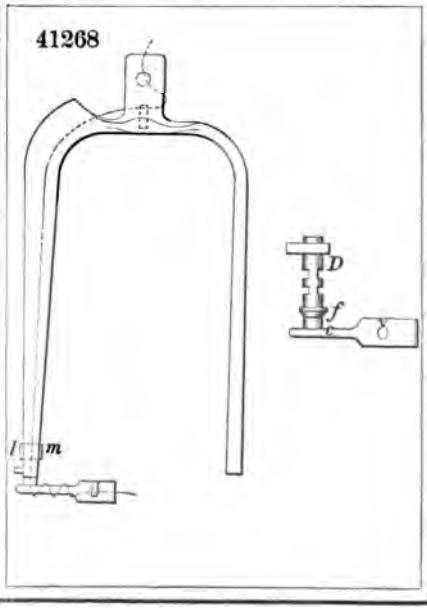

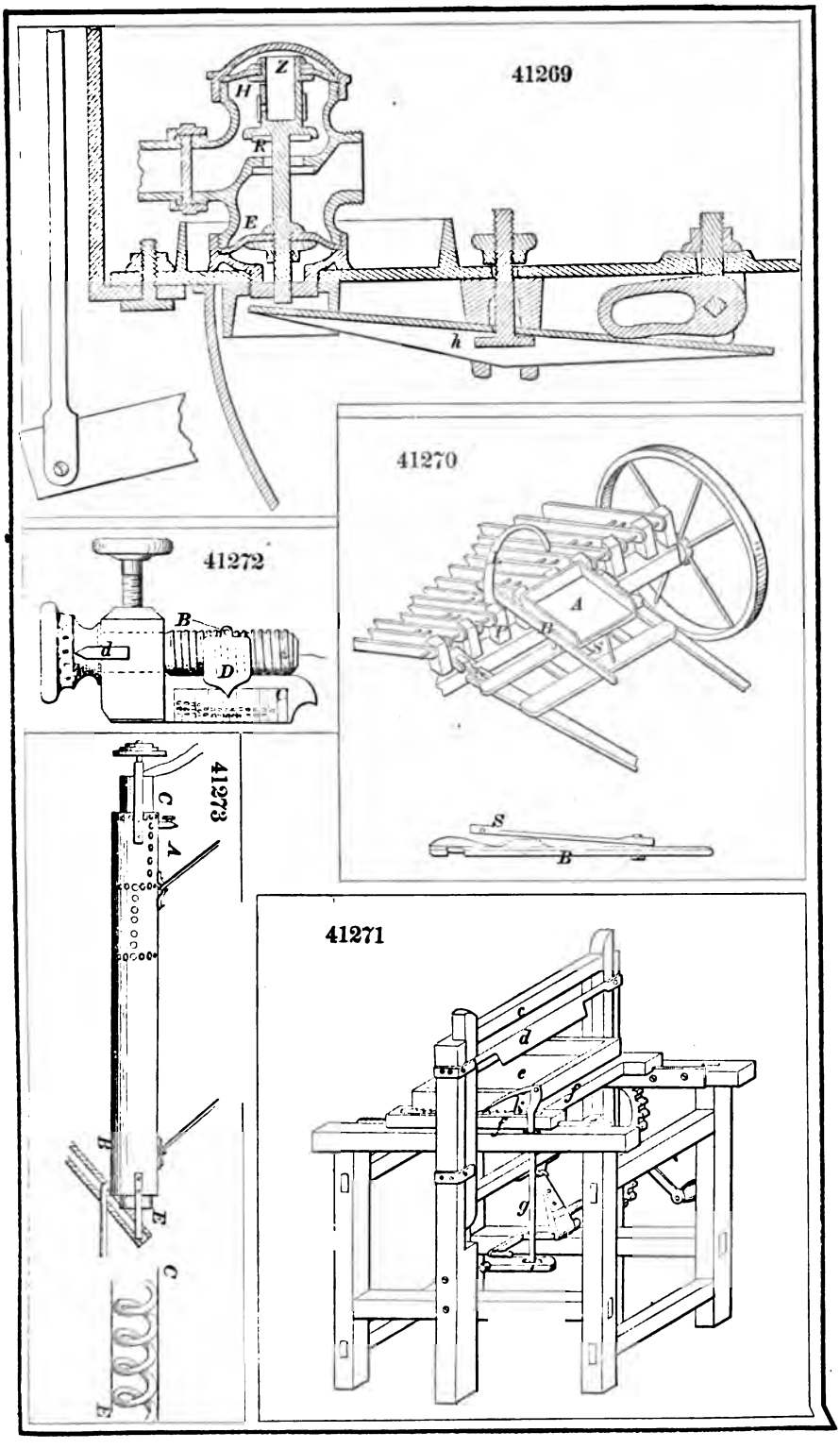
41269
Z
H
R
E
h
41270
A
B
S
41272
B
d
D
C
41273
C
M
A
B
E
C
E
41271
c
d
e
f
h
g

41274

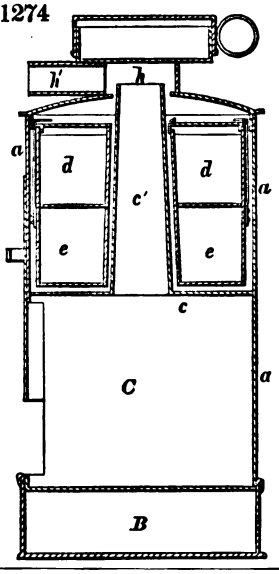

41277

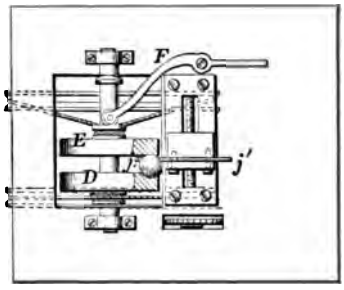

41278

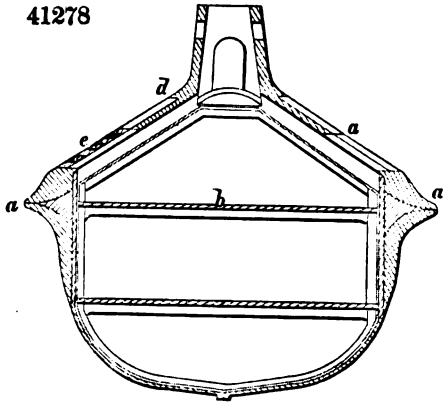

41280

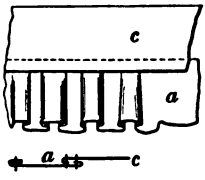

41281

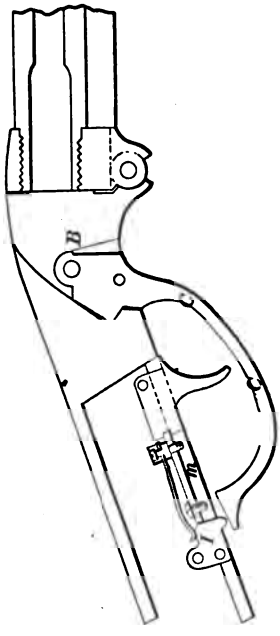

41282

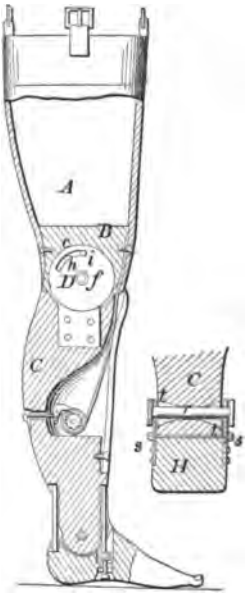

41283

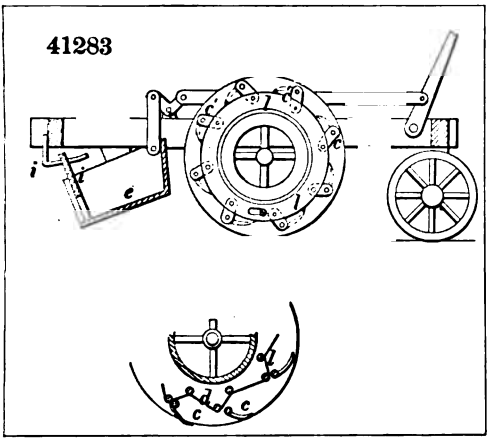

41287

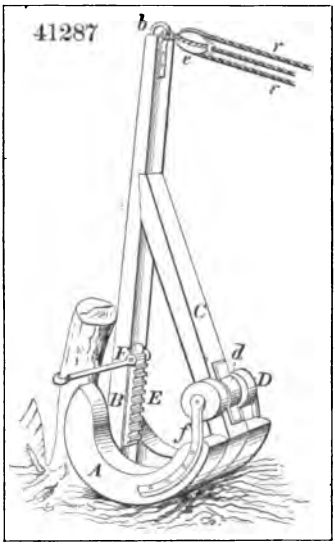

41285

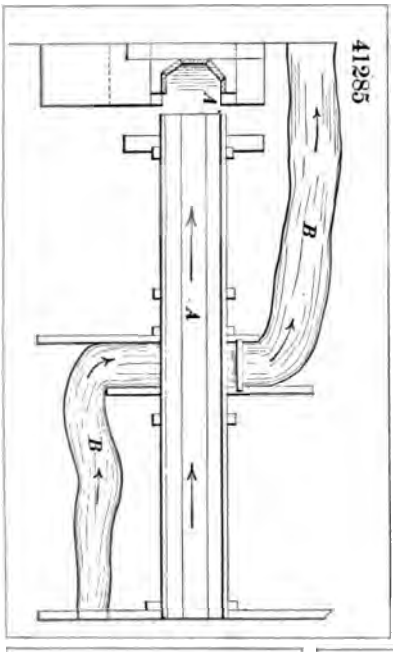

41288

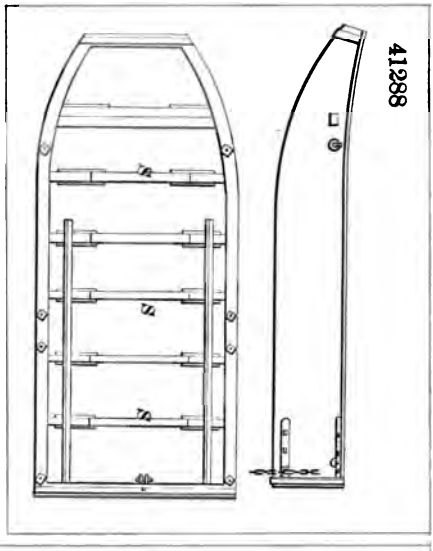

41289

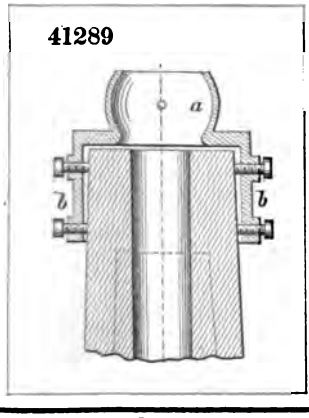

41290

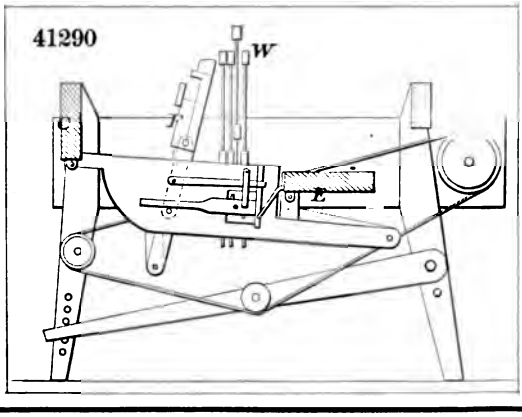

41291

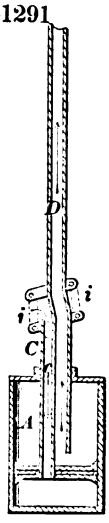

41293

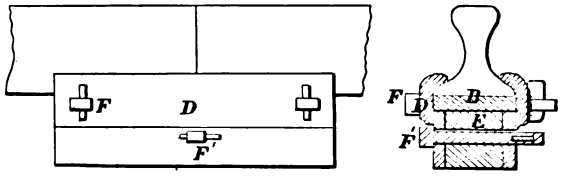

41294

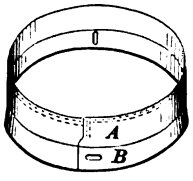

41295

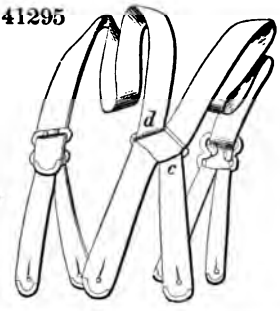

41297

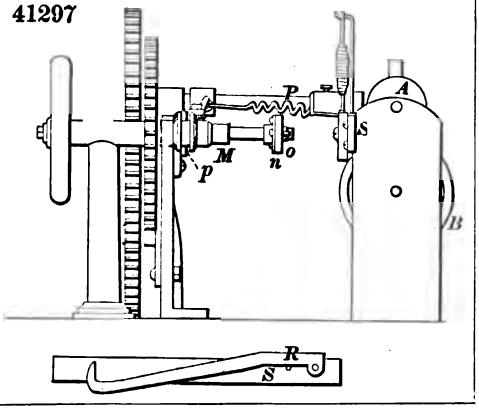

41292

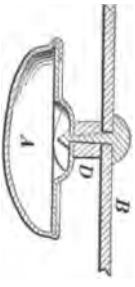

41296

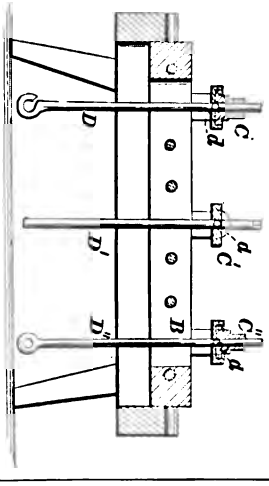

41298

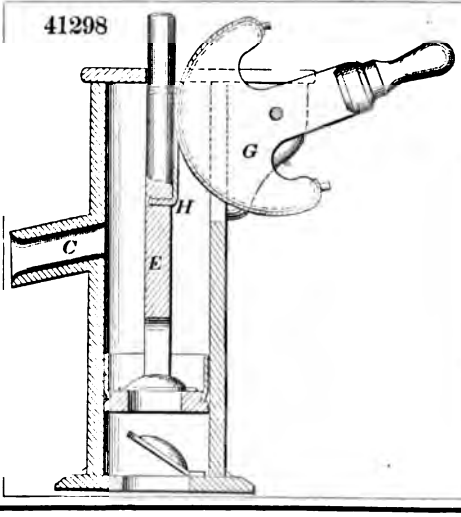

41299

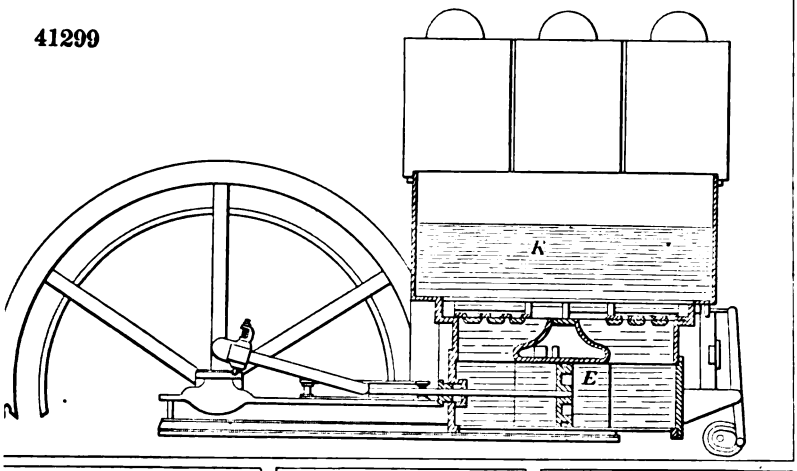

41300

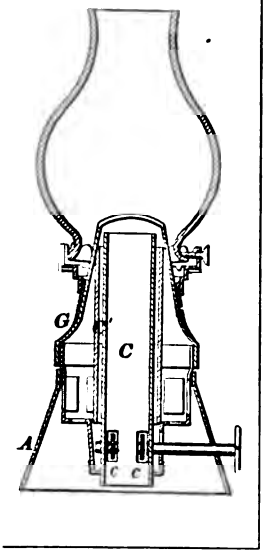

41303

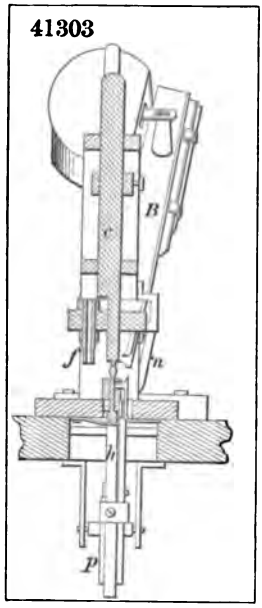

41302

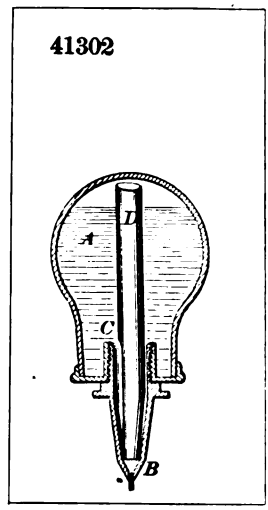

41304

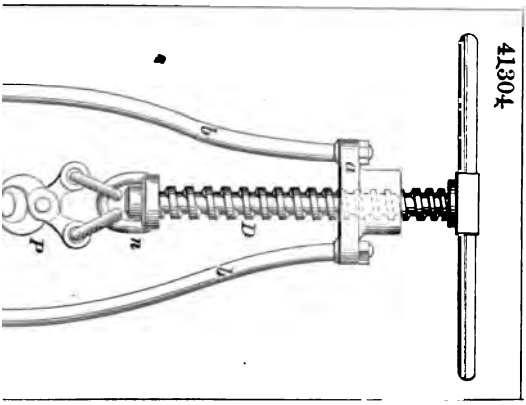

41305

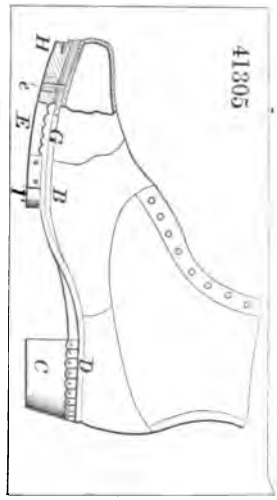

41306

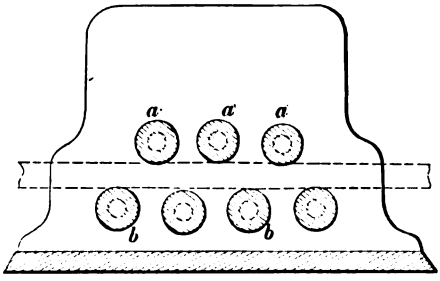

41307

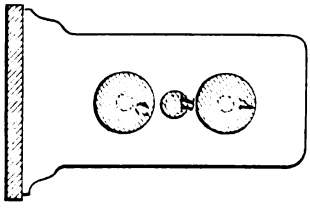

41309

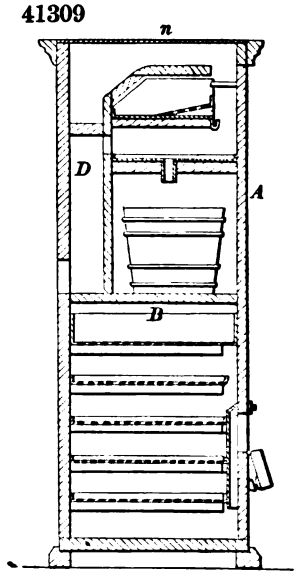

41308

41310

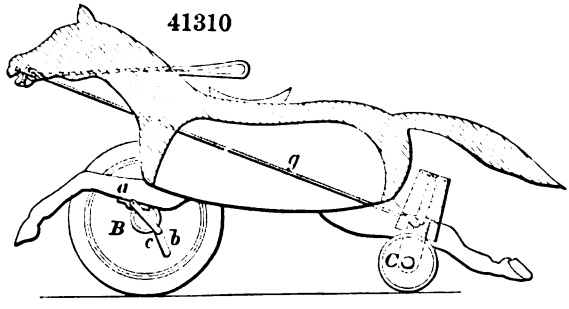

41311

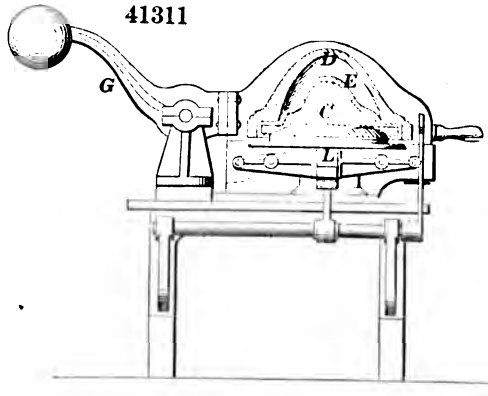

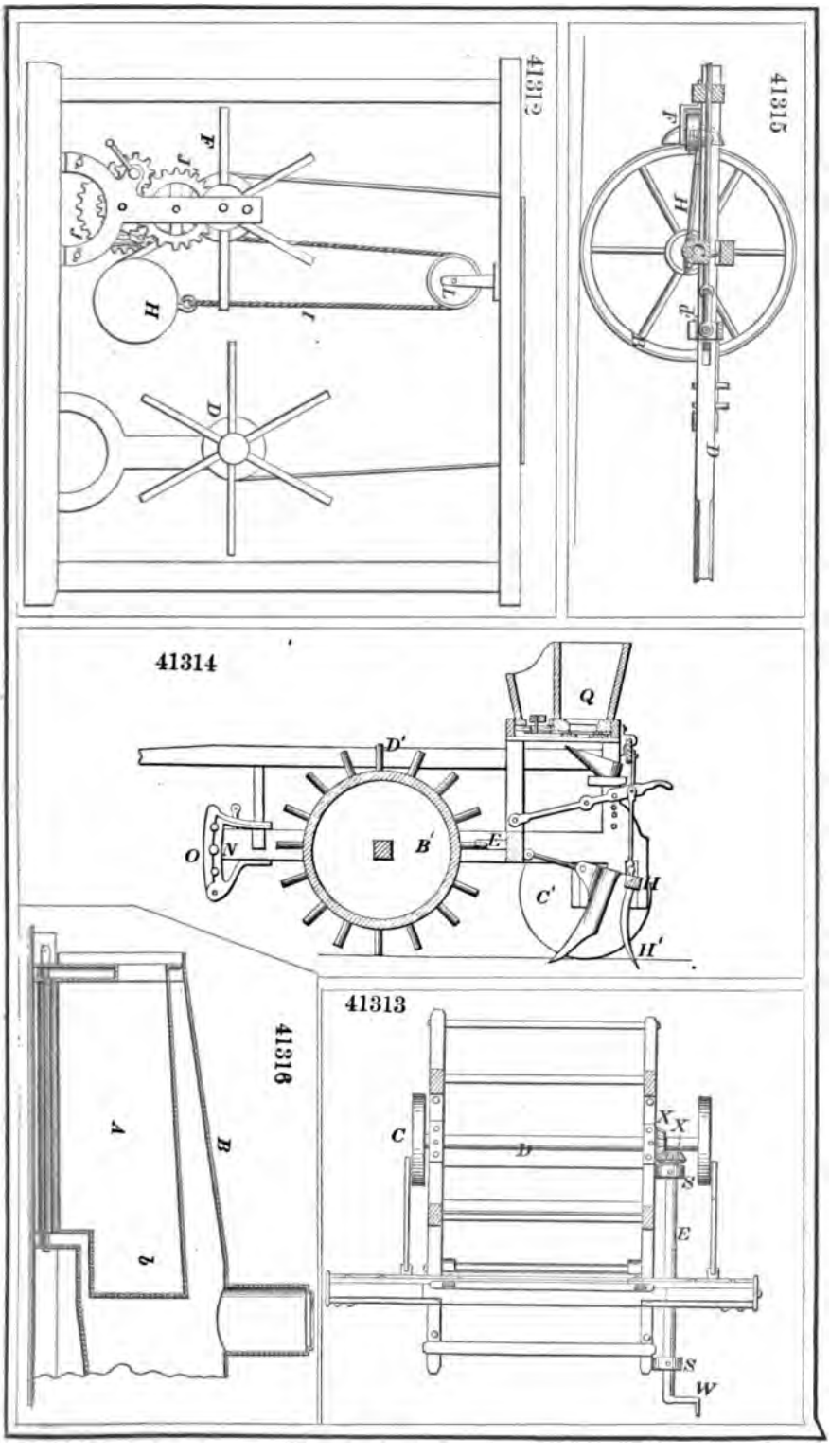
41312
41315
41314
41316
41313

41322

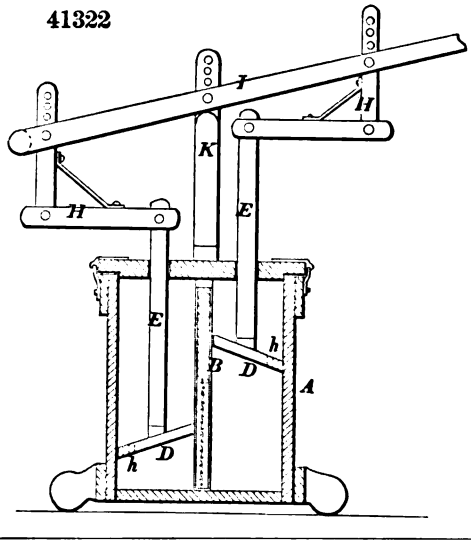

41317

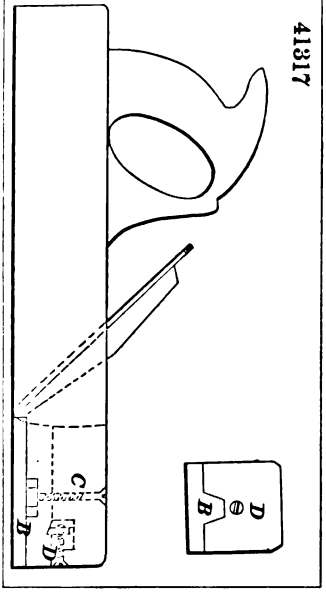

41319

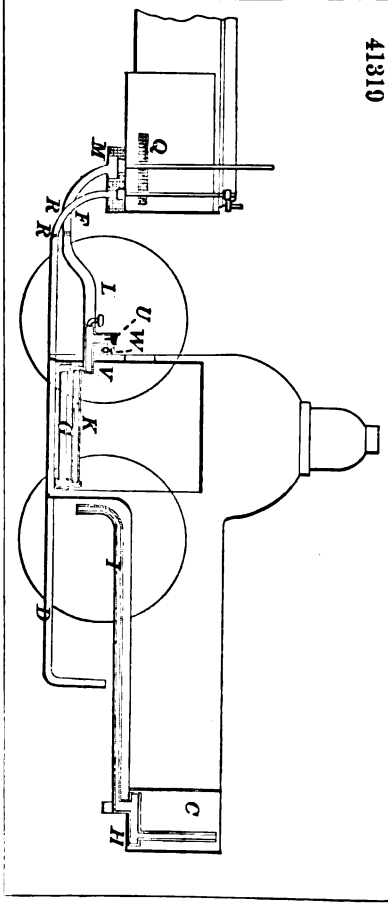

41320

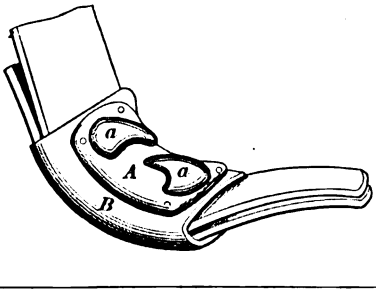

41321

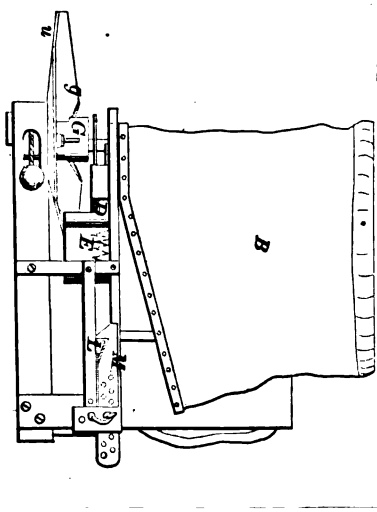

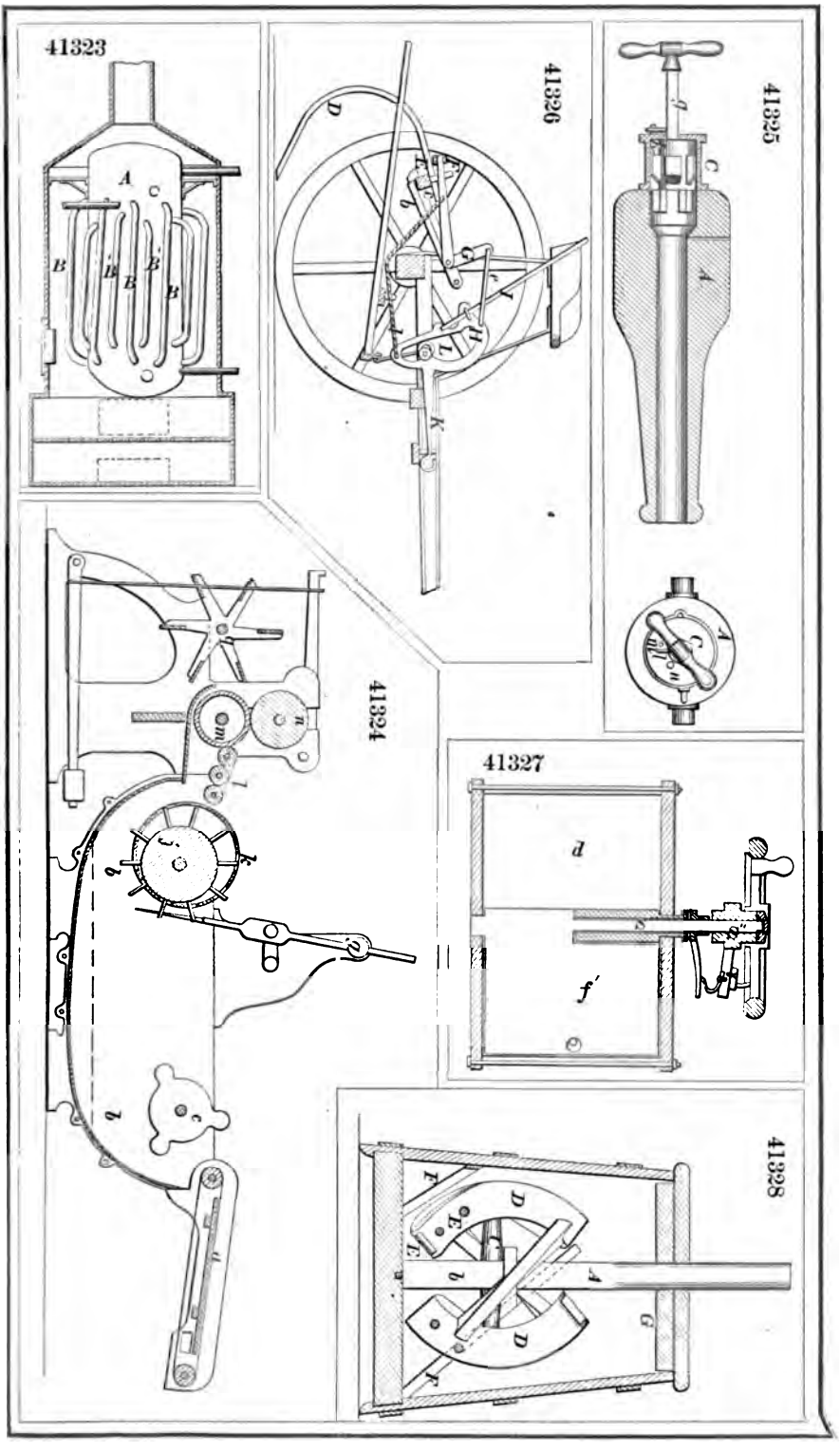
41323
41326
41325
41324
41327
41328

41329

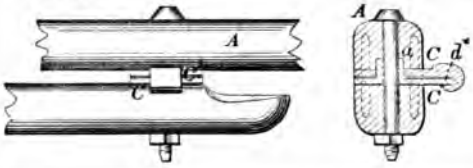

41335

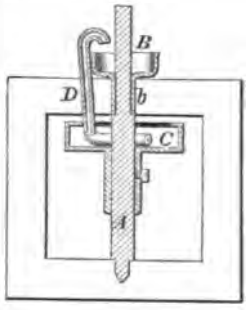

41330

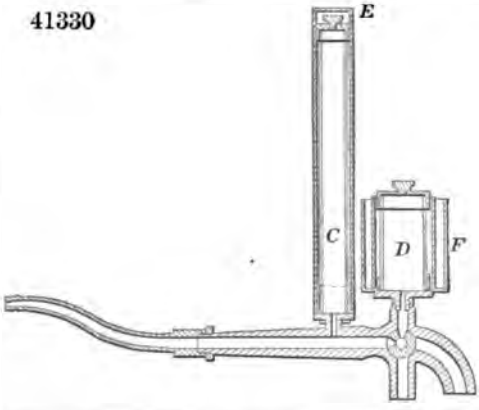

41333

41332

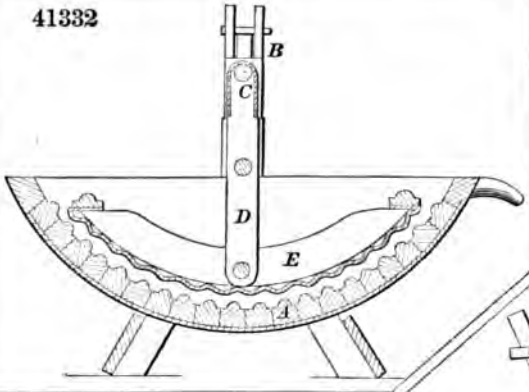

41336

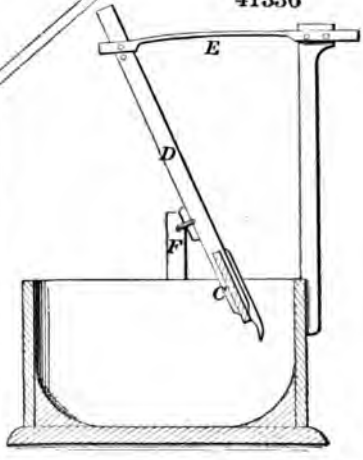

41334

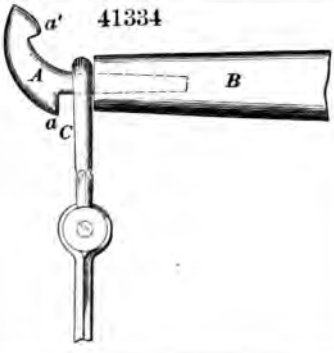

41337

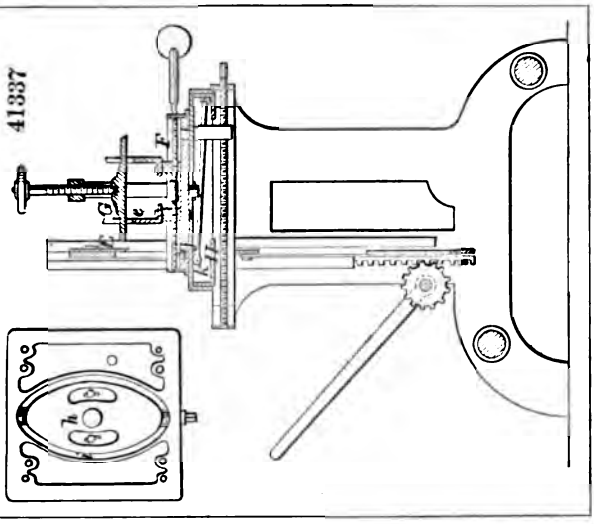

41338

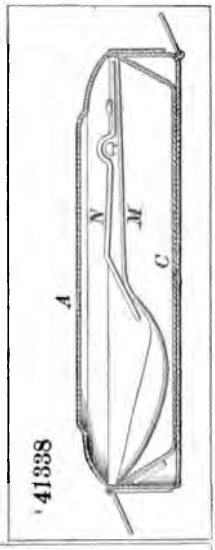

41339

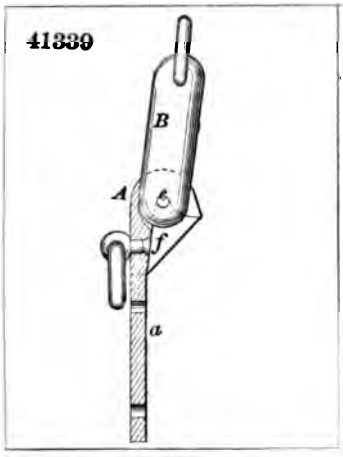

41341

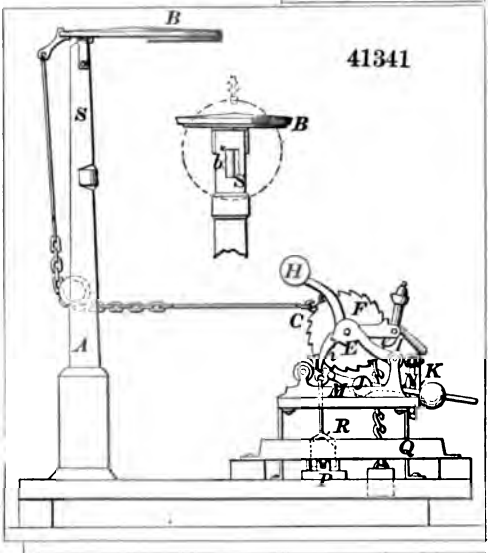

41340

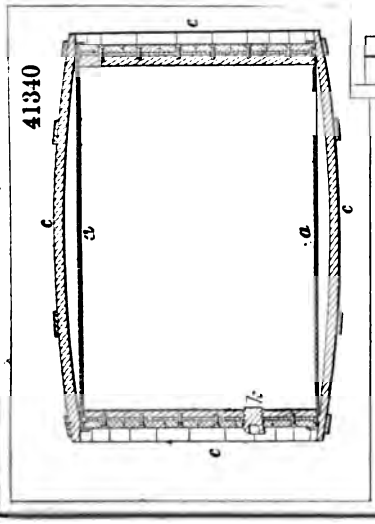

41342

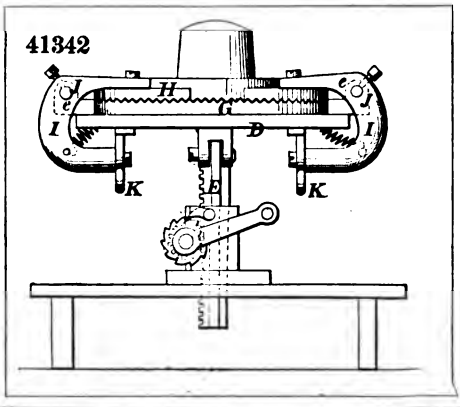

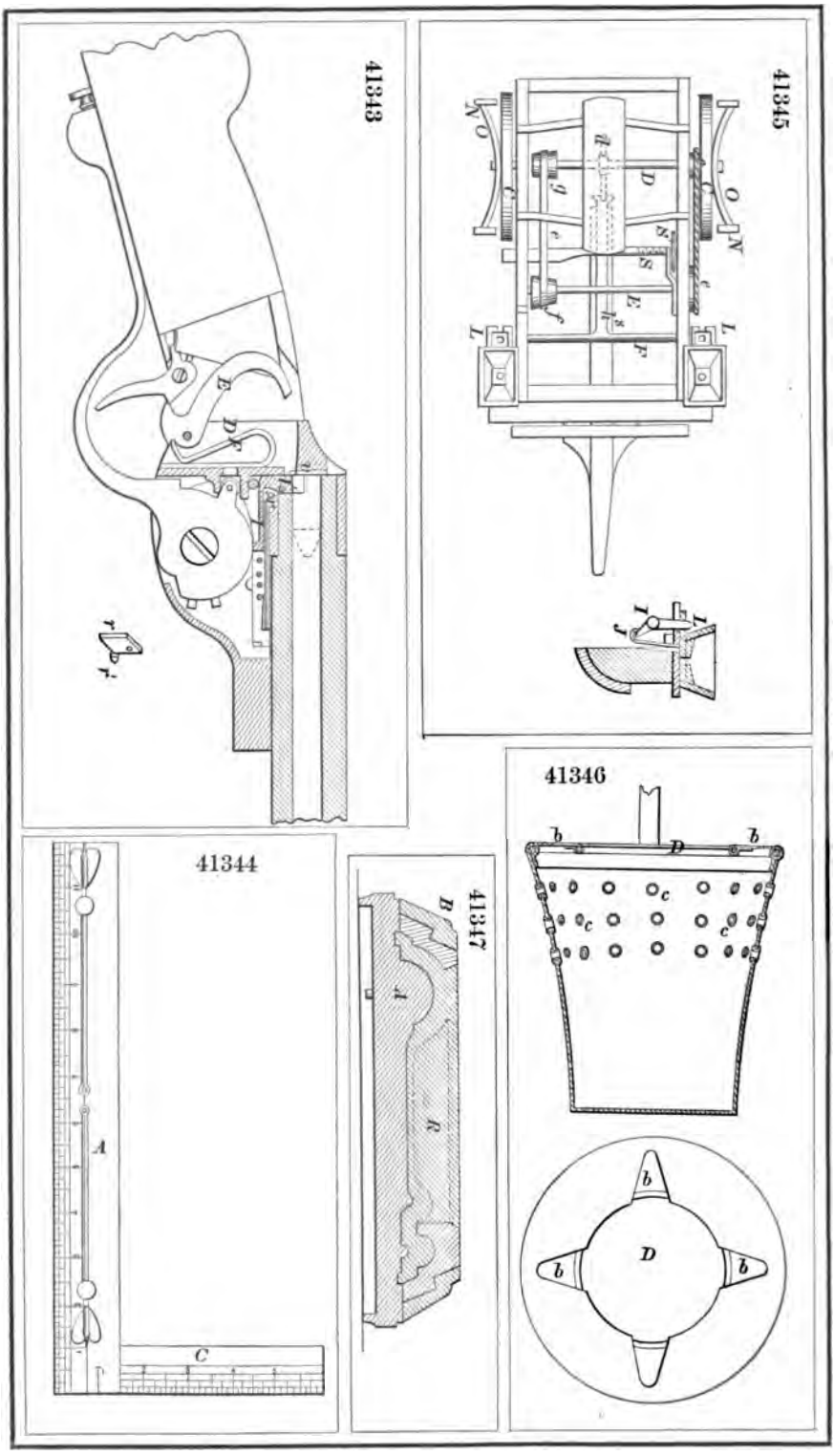
41345
41343
41346
41344
41347

41351

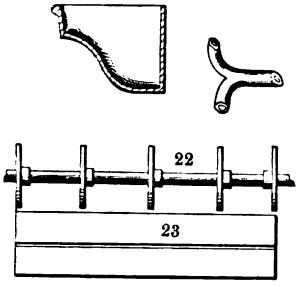

41353

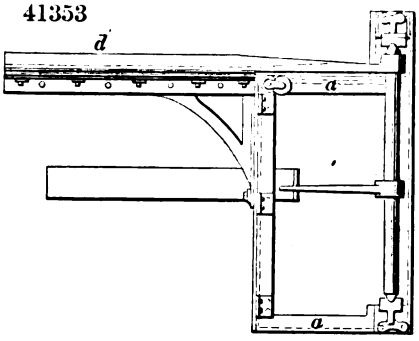

41355

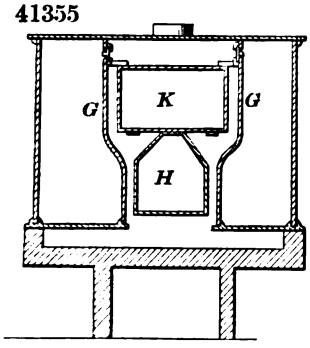

41354

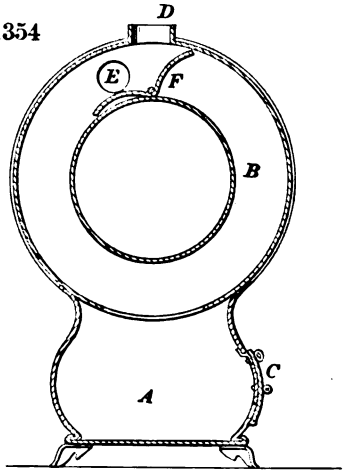

41356

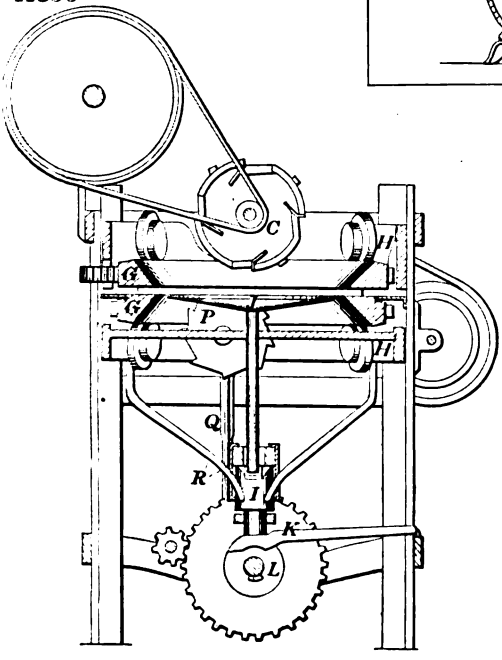

41357

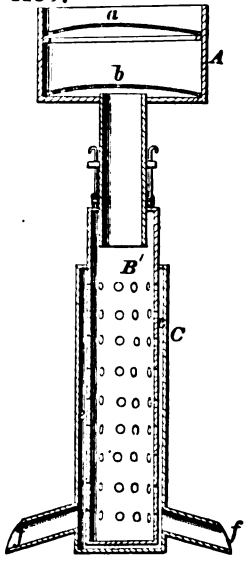

41358

41359

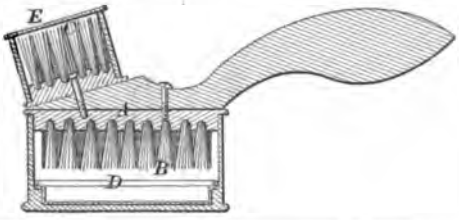

41361

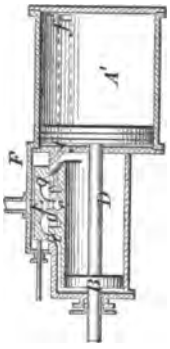

41360

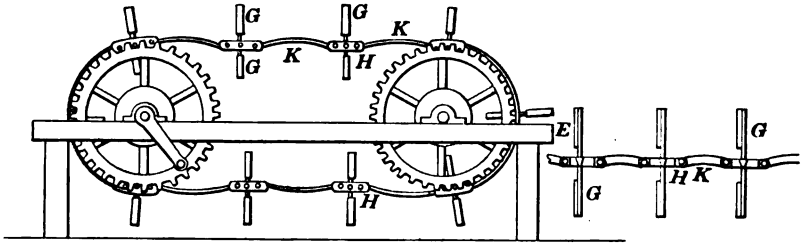

41362

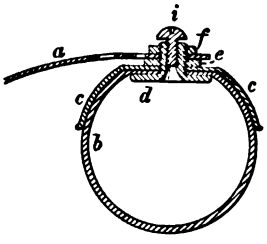

41363

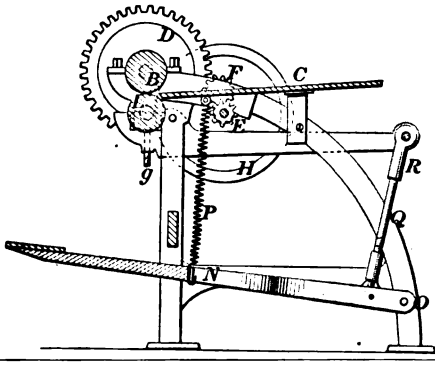

41364

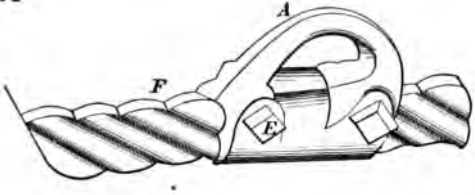

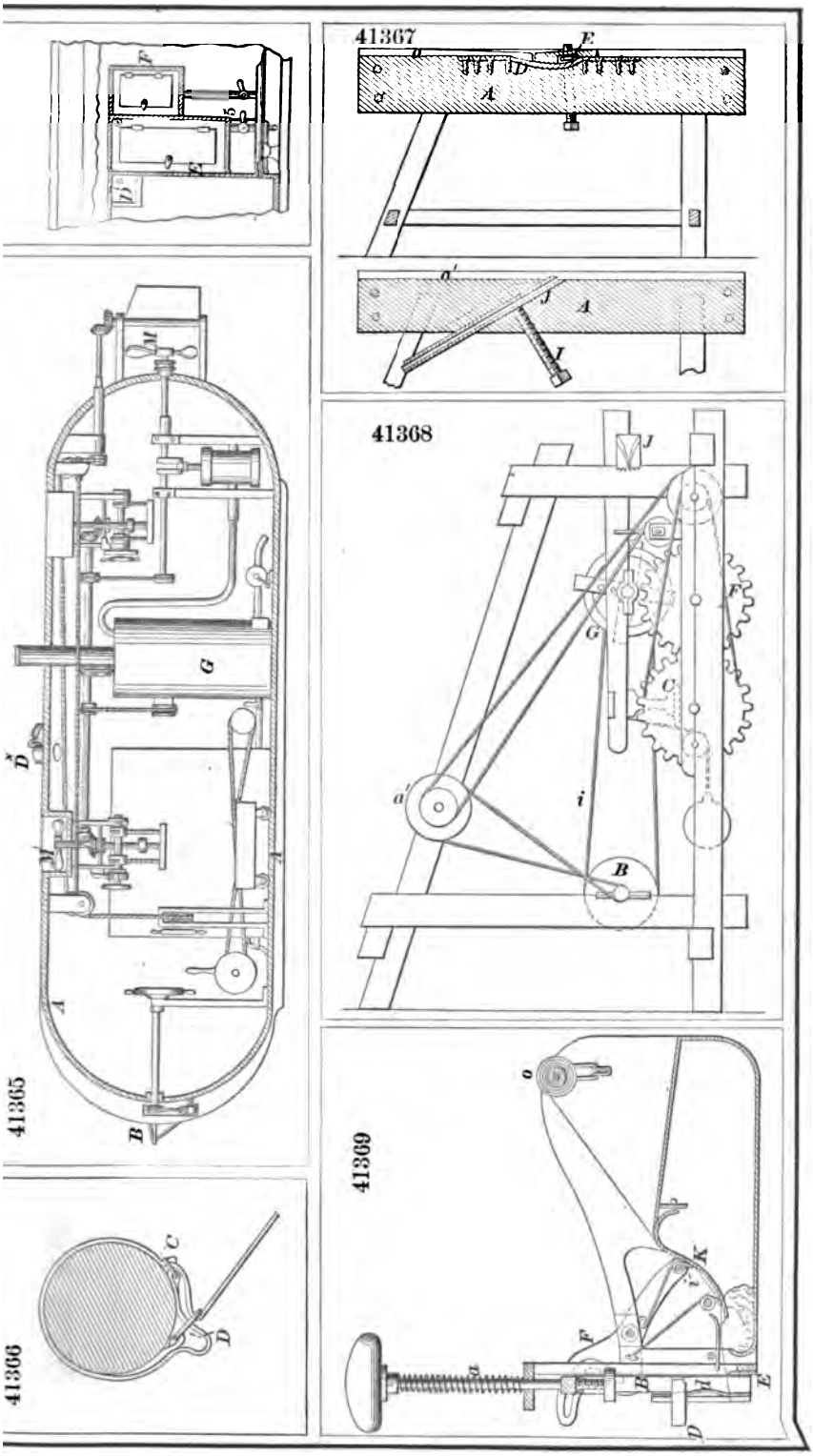
41367
41368
41369
41365
41366

41370

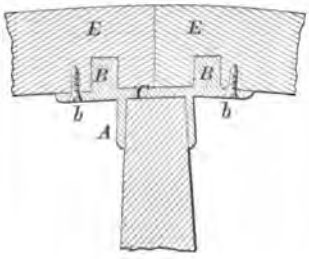

41373

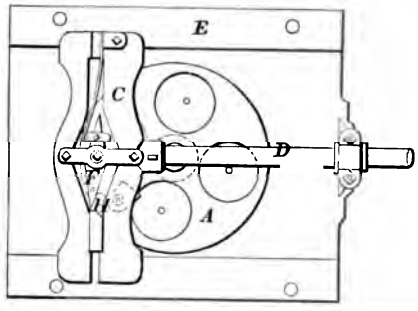

41371

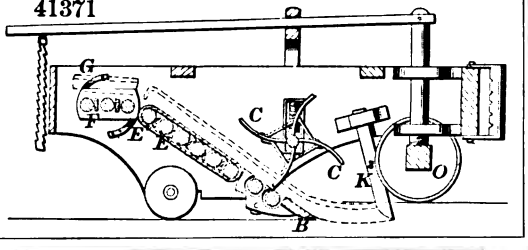

41376

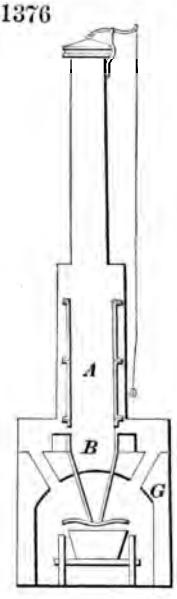

41375

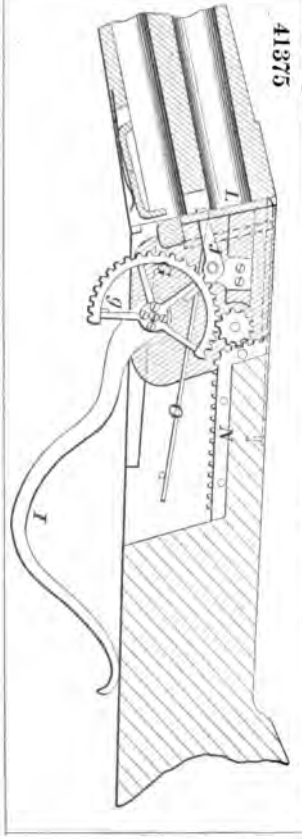

41372

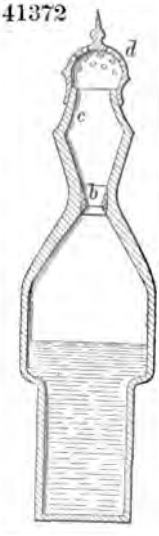

41374

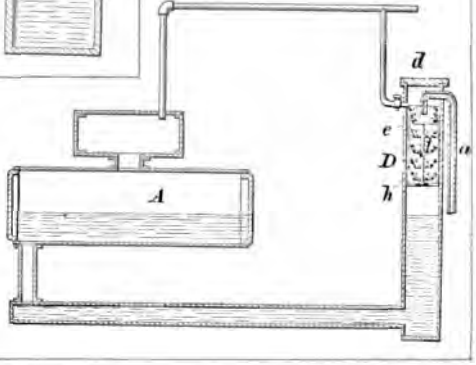

41377

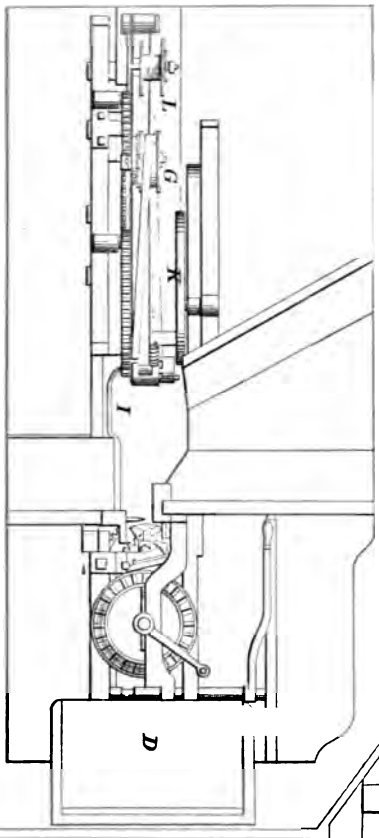

41379

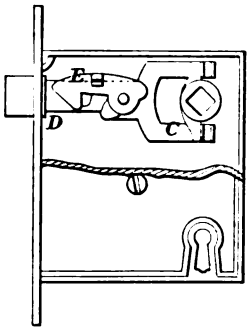

41380

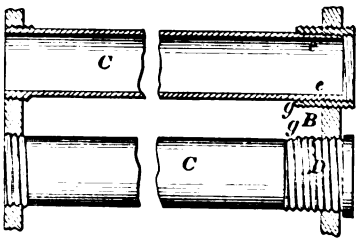

41378

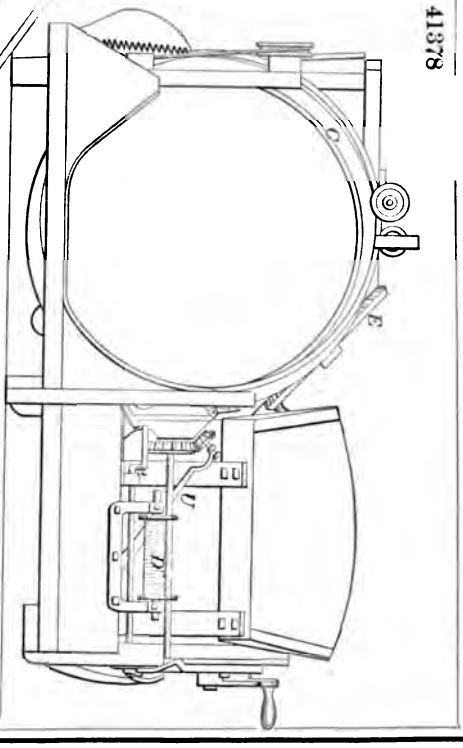

41381

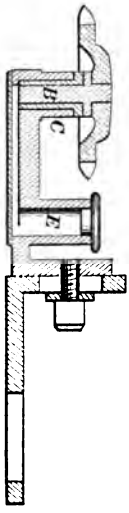

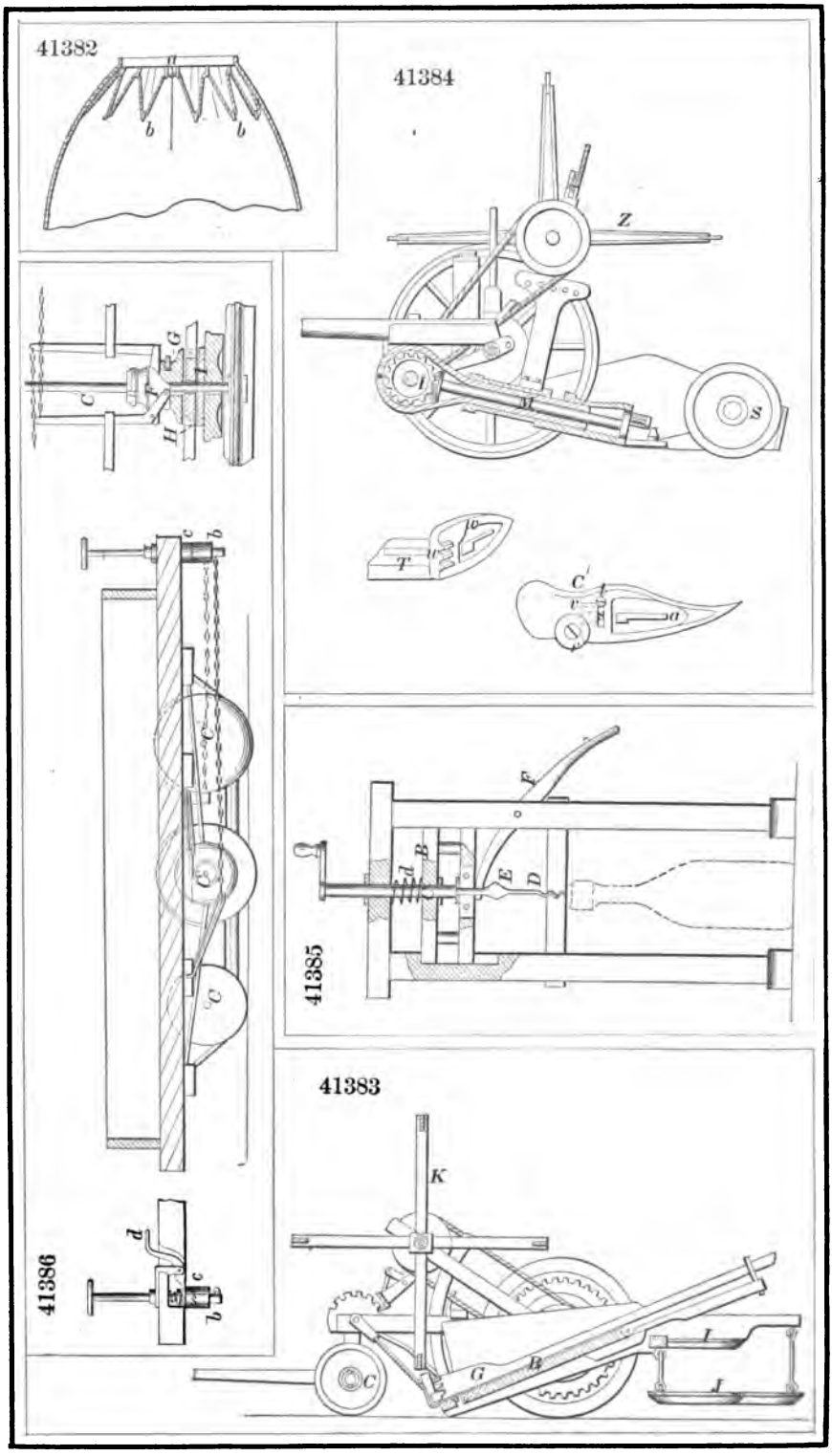
41382
41384
41385
41383
41386

41387

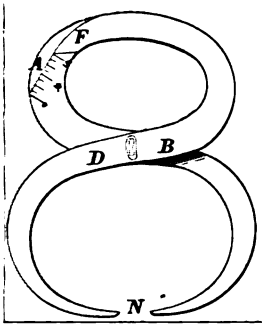

41389

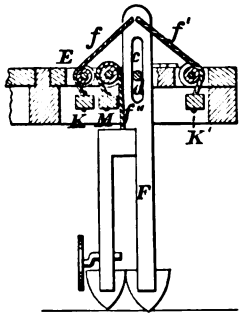

41392

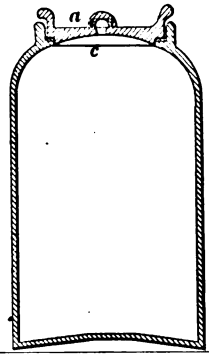

41388

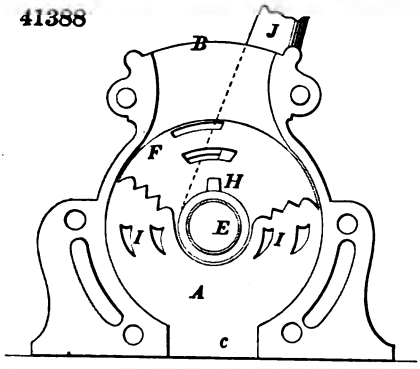

41391

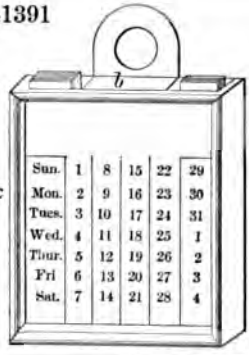

Sun.	1	8	15	22	29
Mon.	2	9	16	23	30
Tues.	3	10	17	24	31
Wed.	4	11	18	25	1
Thur.	5	12	19	26	2
Fri	6	13	20	27	3
Sat.	7	14	21	28	4

41390

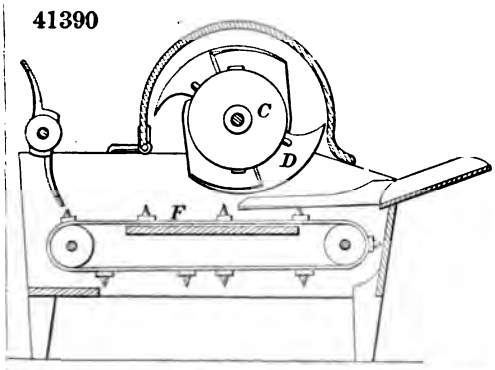

41393

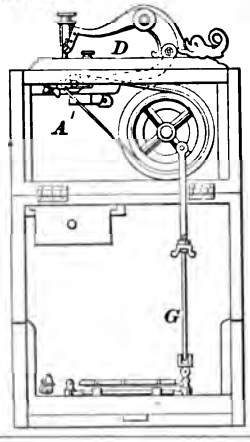

41394

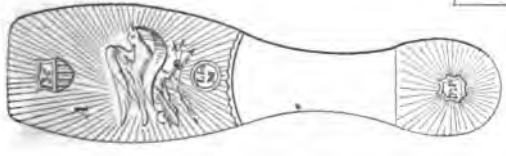

UNITED STATES OF AMERICA. LIBRARY HOUSE REPRESENTATIVES.

41395

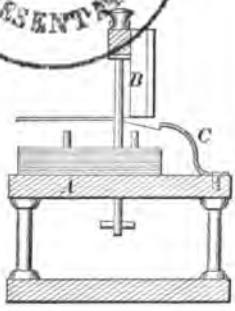

41396

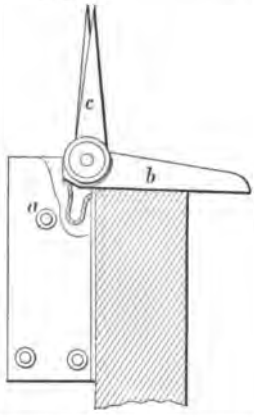

41401

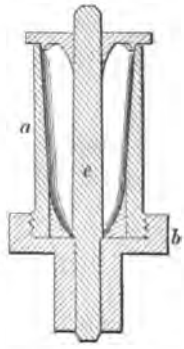

41399

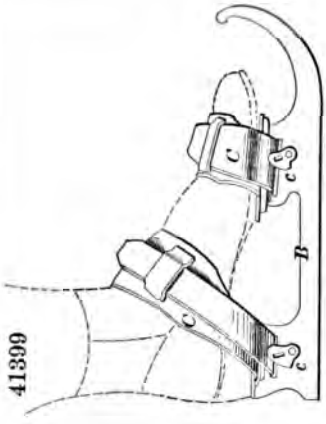

41397

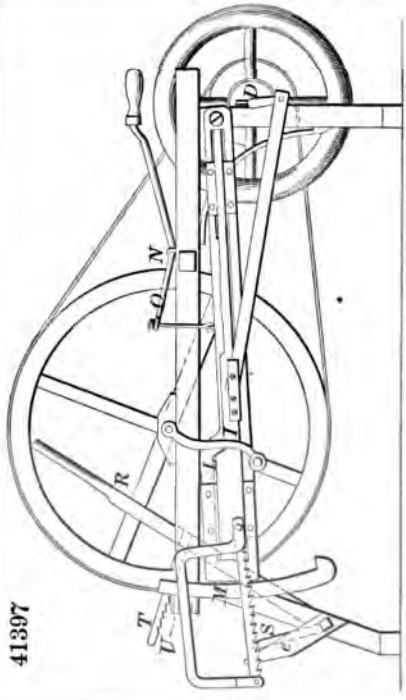

41402

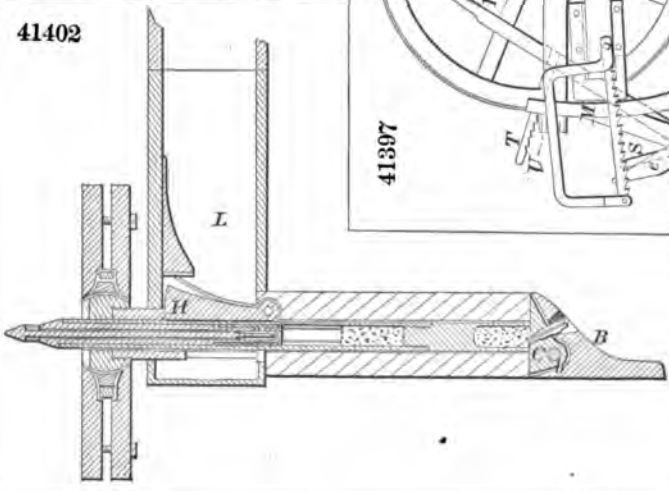

41403

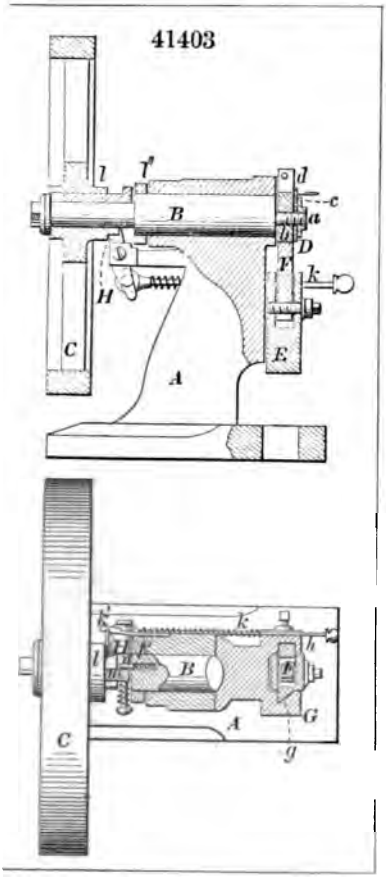

41404

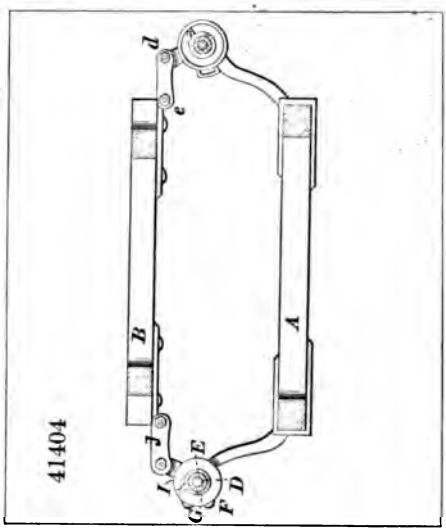

41406

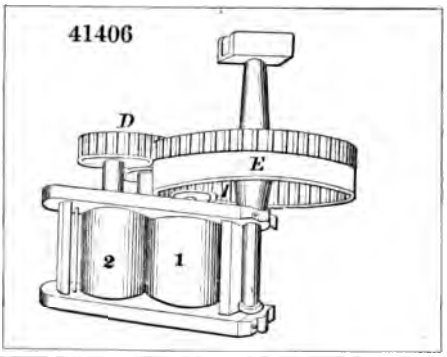

41407

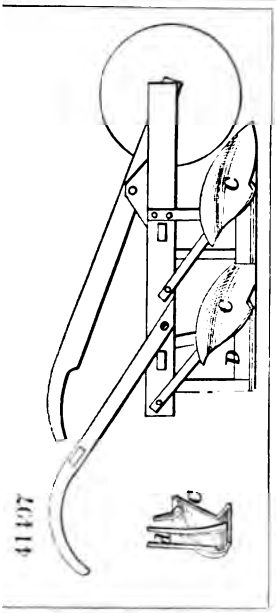

41408

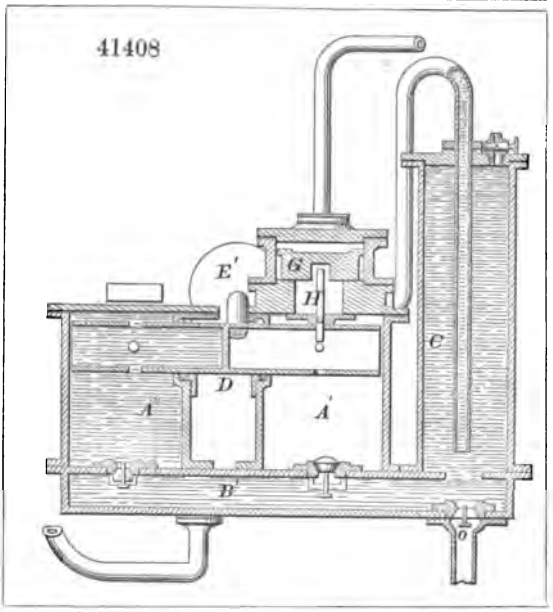

41409

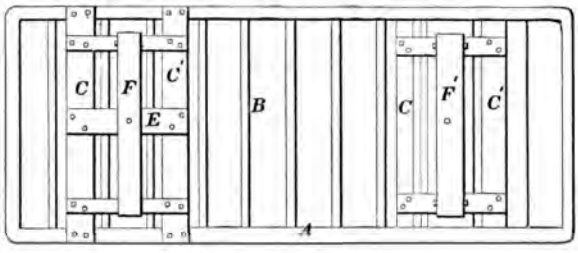

41412

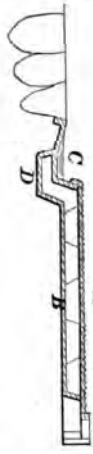

41410

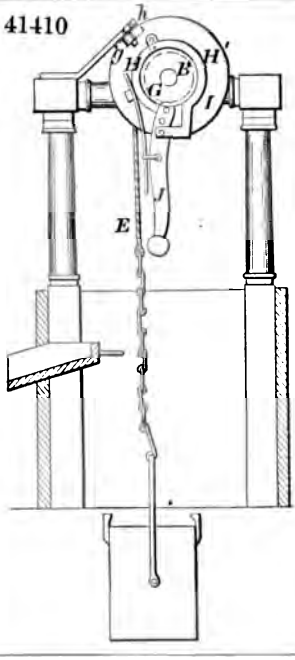

41411

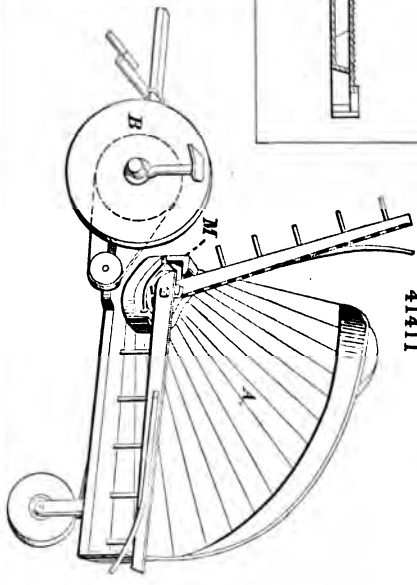

41414

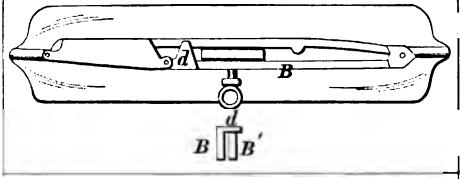

41415

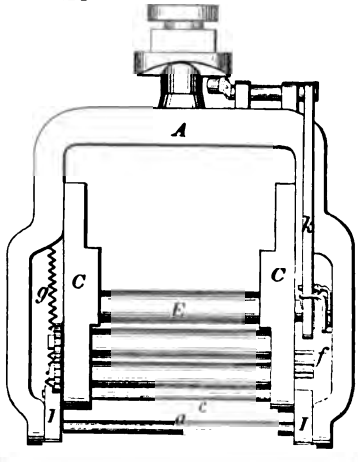

41413

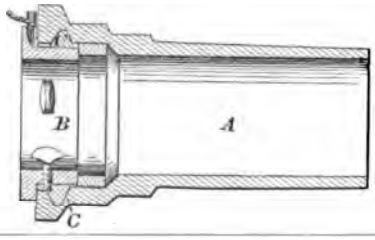

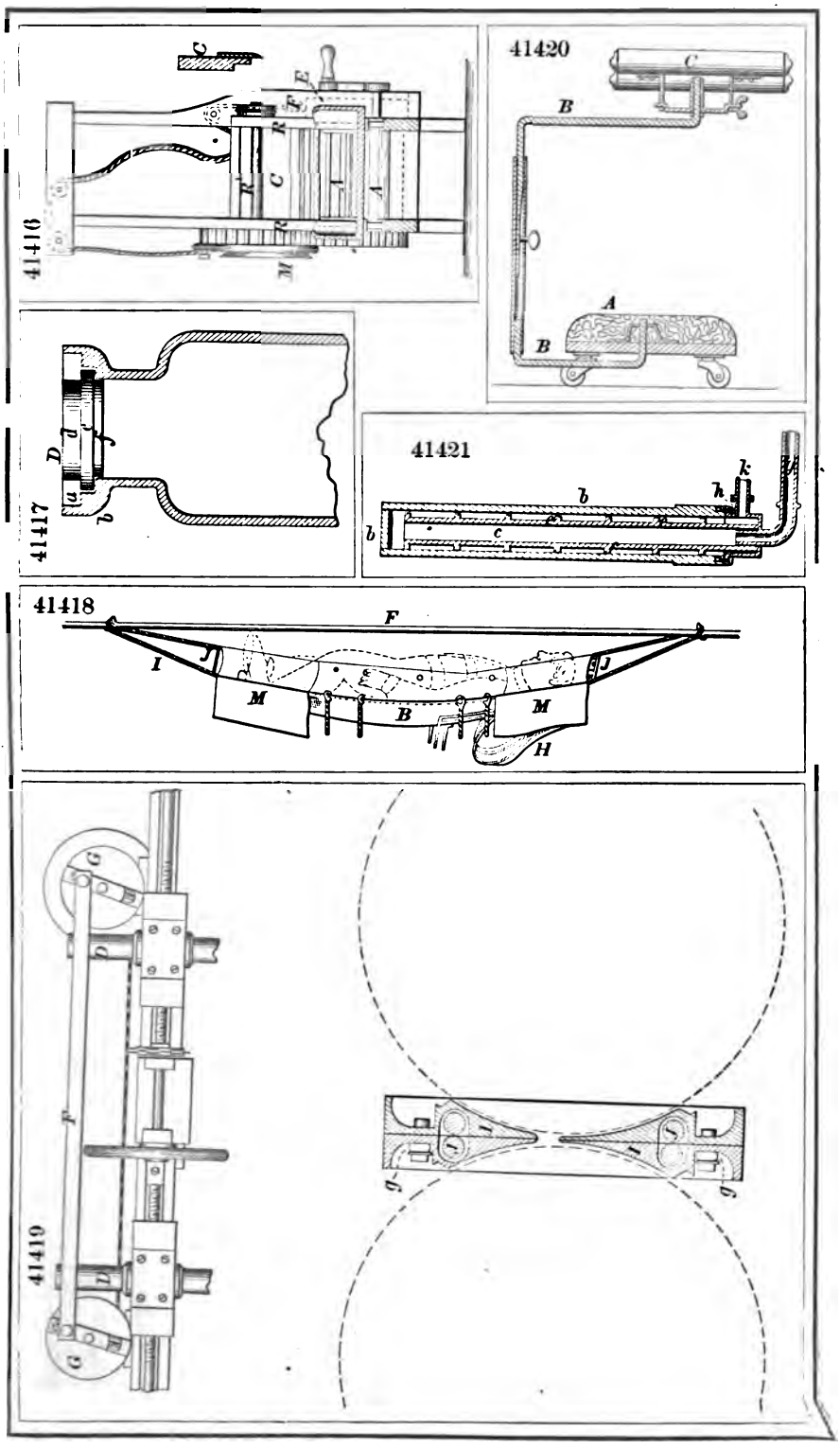
41416
41417
41418
41419
41420
41421

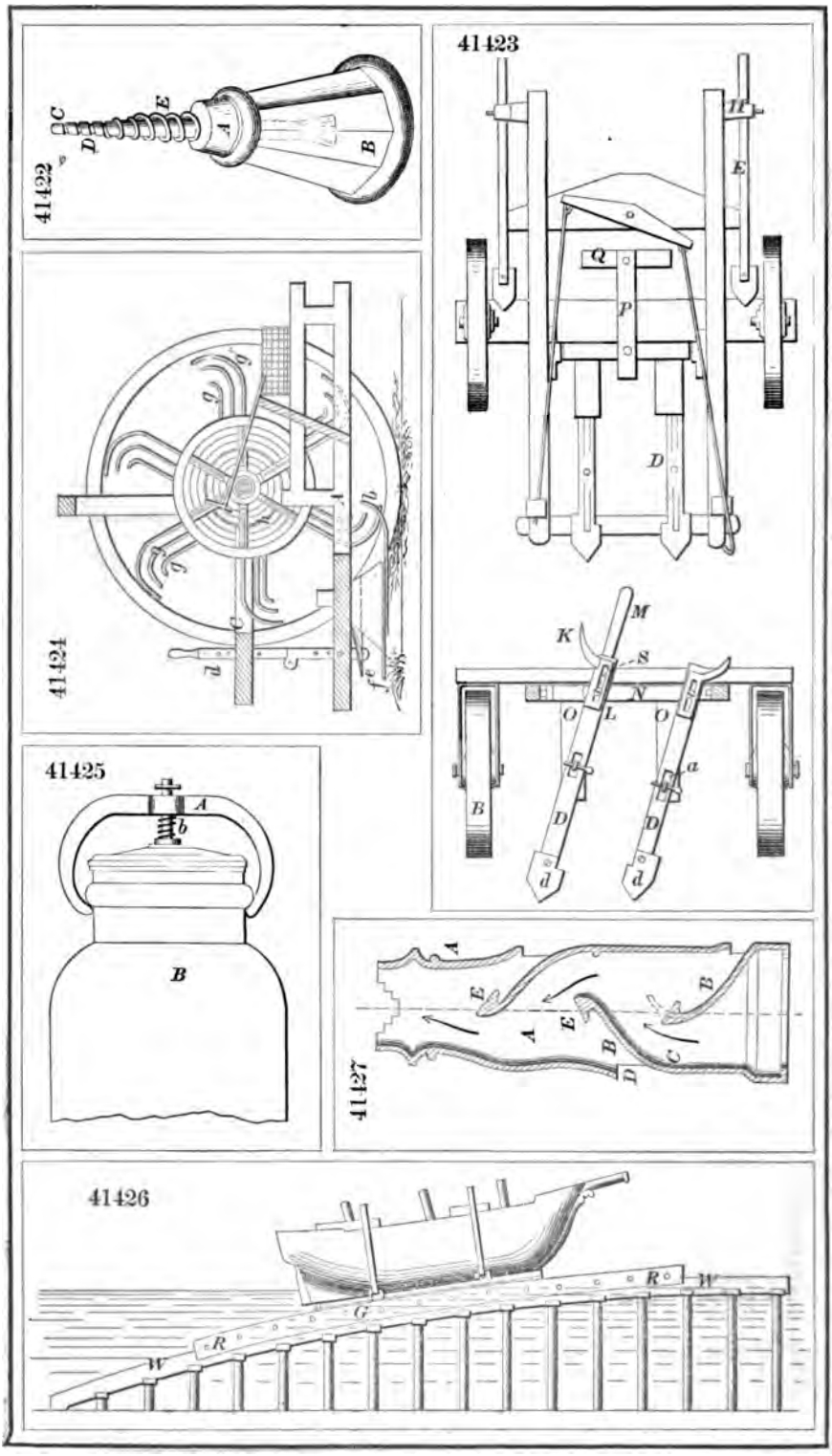
41422
41423
41424
41425
41426
41427

41429

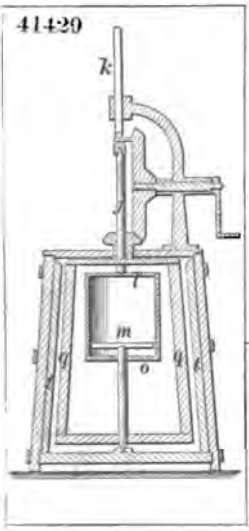

41430

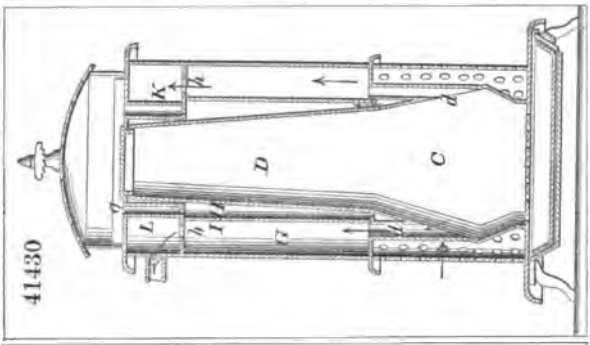

41433

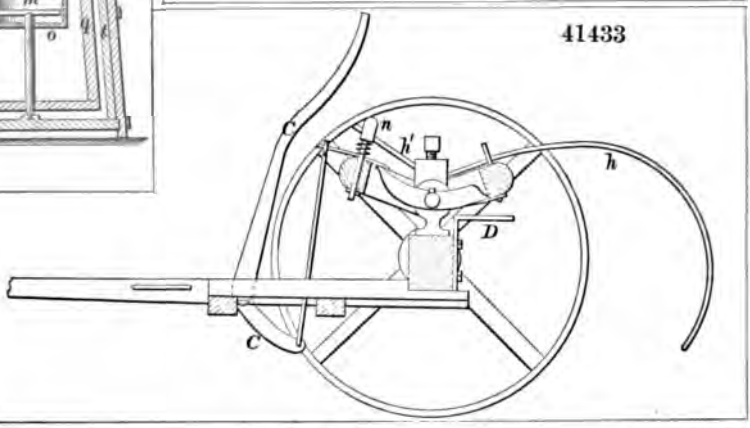

41434

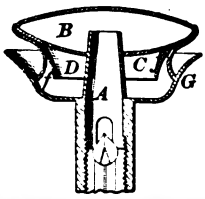

41435

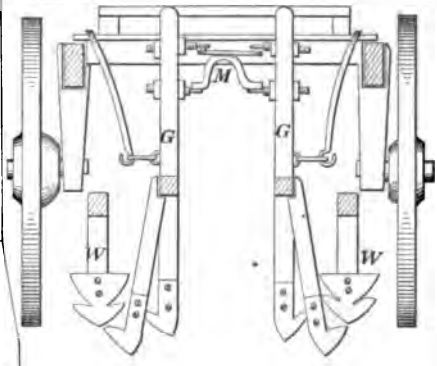

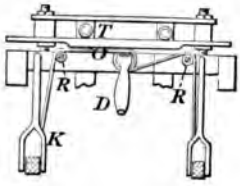

41432

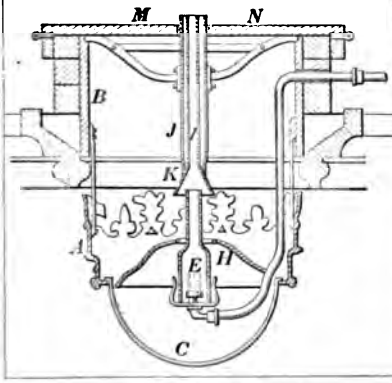

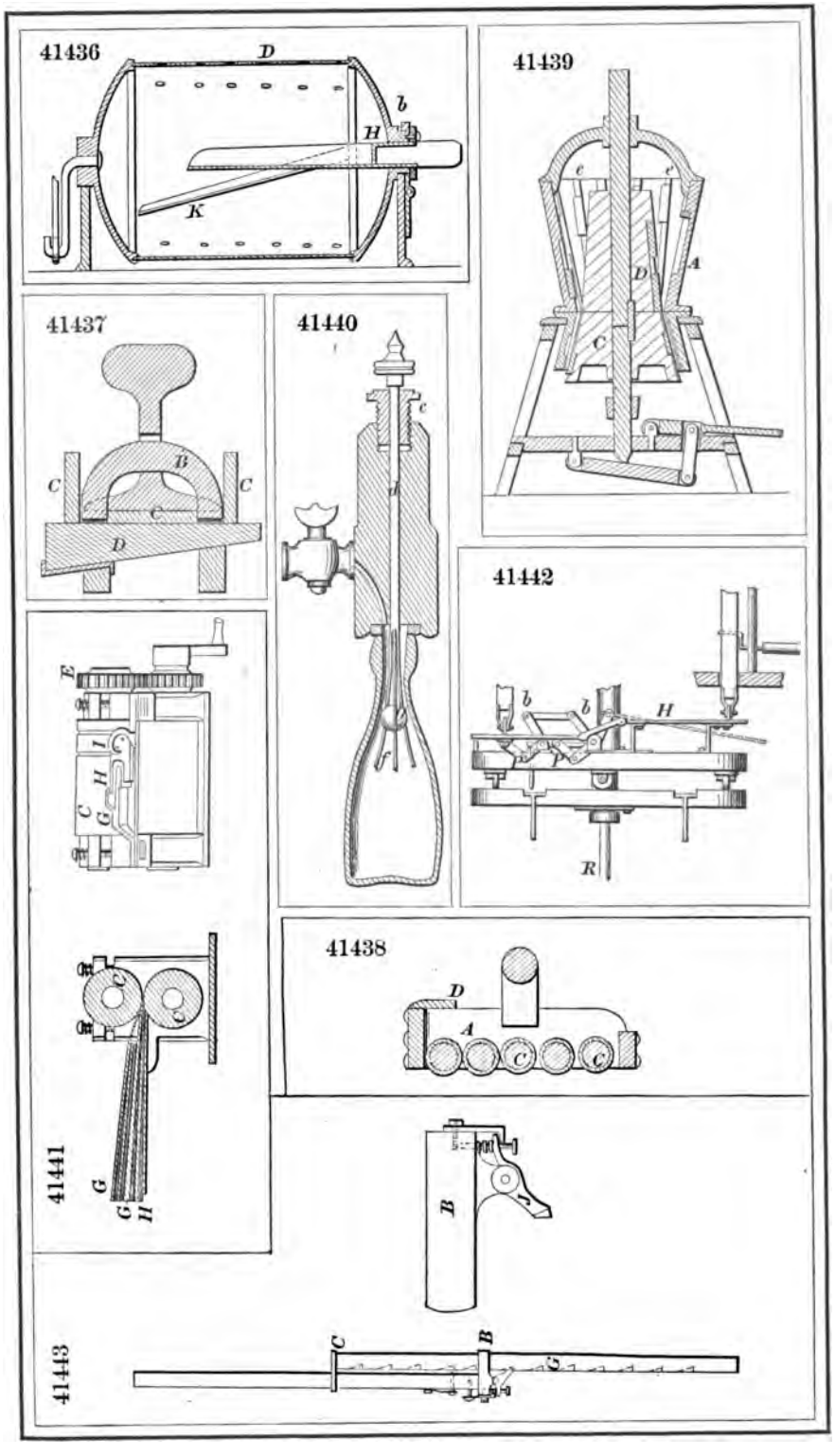
41436
D
b
H
K
41439
c
c
A
D
C
41437
B
C
C
c
D
41440
c
d
f
41442
b
b
H
R
E
I
H
C
G
41441
C
C
G
G
H
41438
D
A
C
C
B
41443
C
B
G

41444

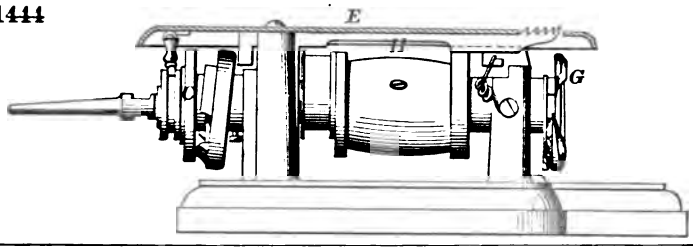

41445

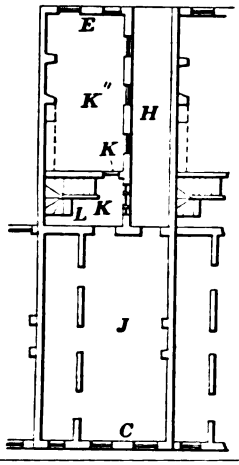

41446

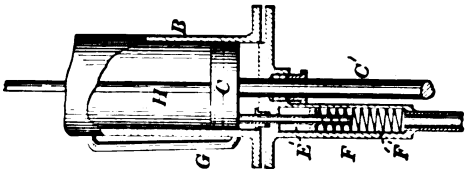

41447

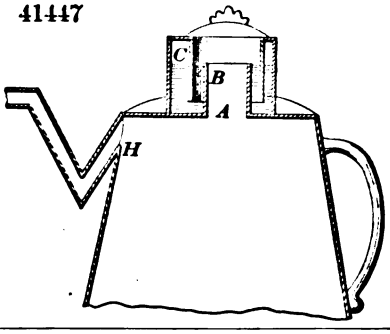

41448

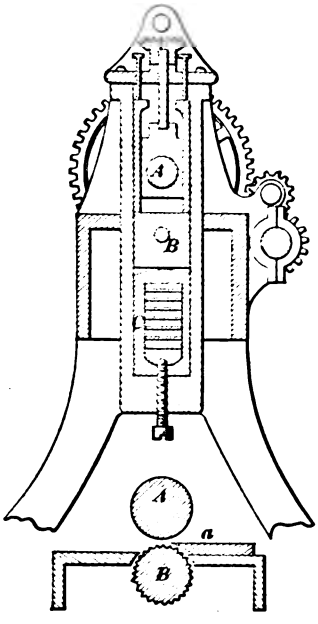

41449

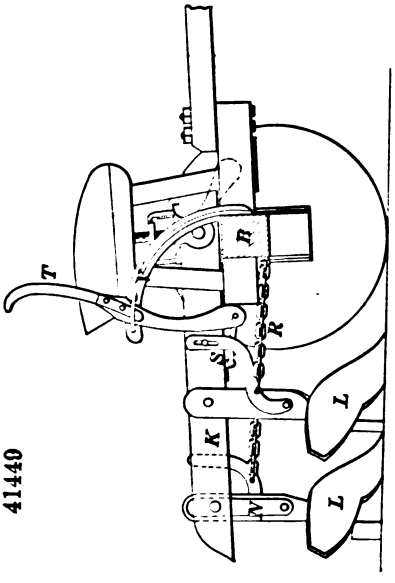

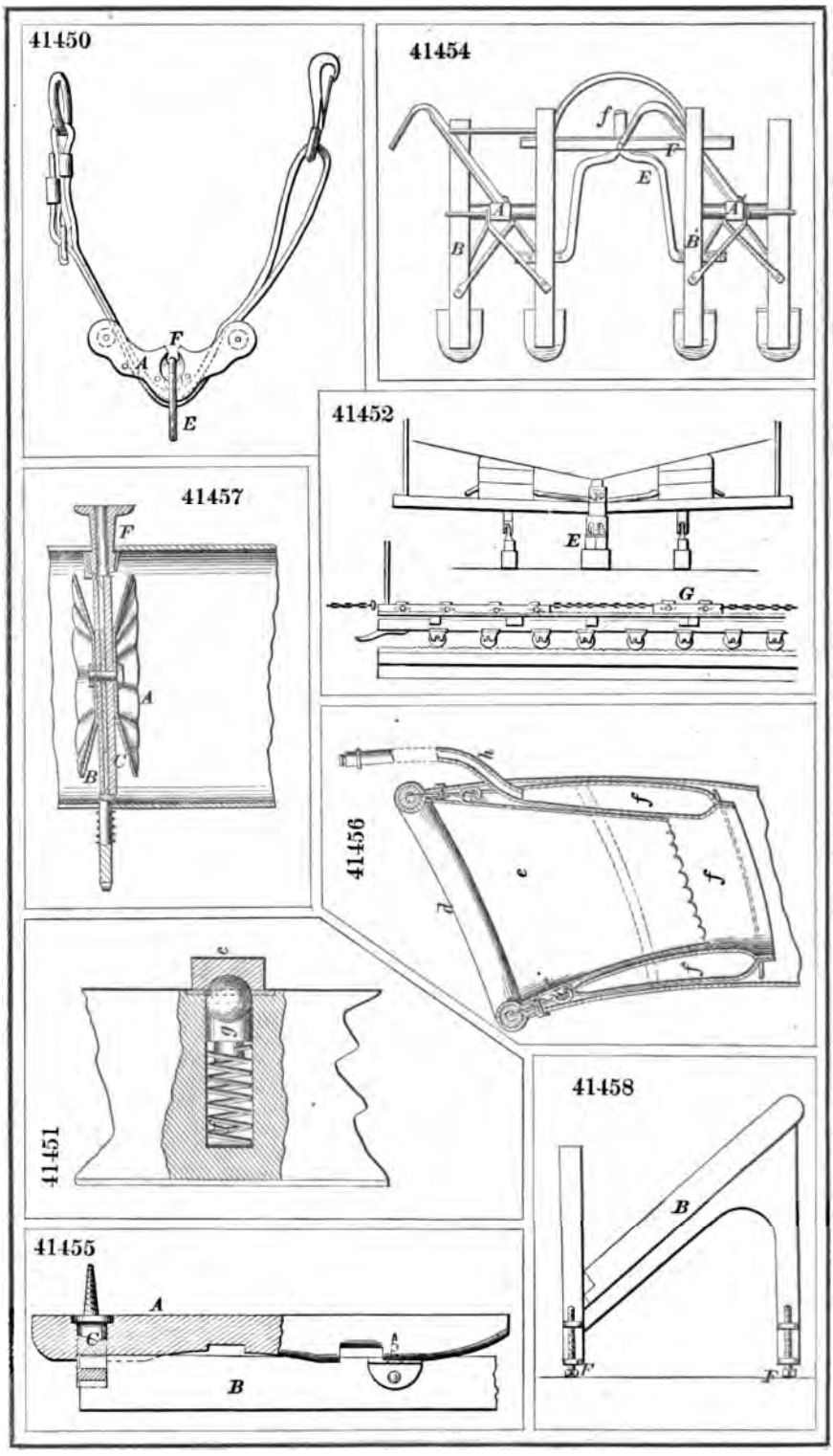
41450
F
A
E
41454
f
F
E
A
A
B
B
41452
E
G
41457
F
A
C
B
41456
h
f
e
f
f
41451
c
41455
A
C
B
41458
B
F
F

41459

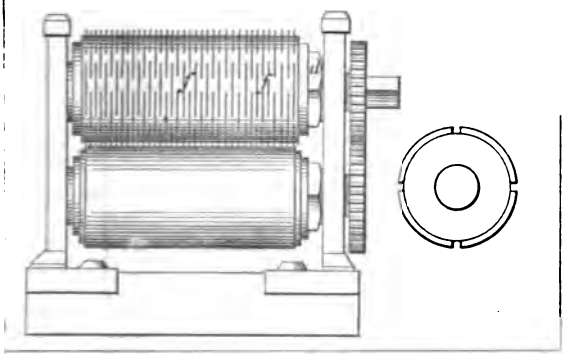

41461

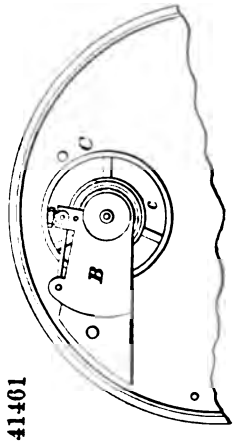

41460

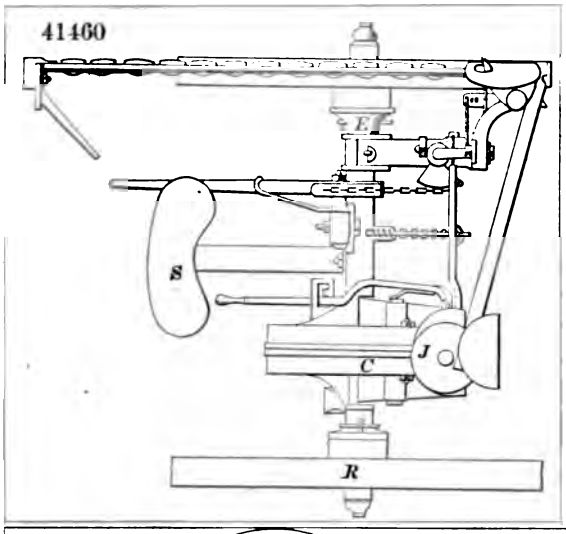

41465

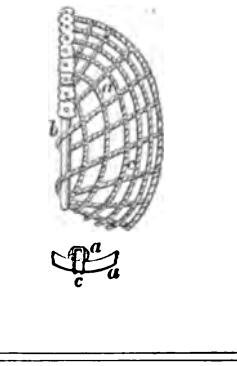

41462

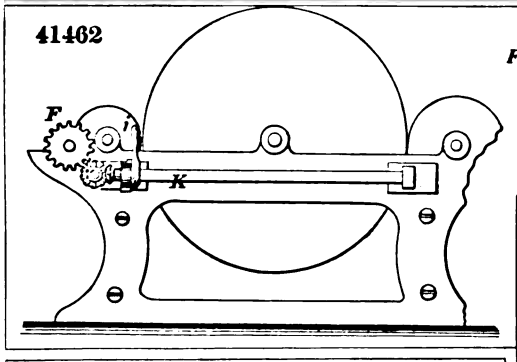

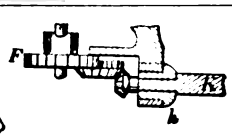

41463

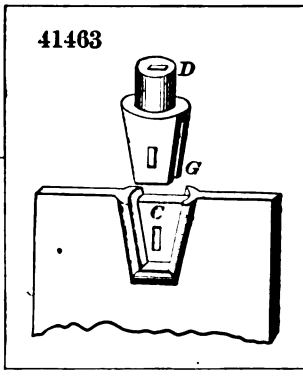

41464

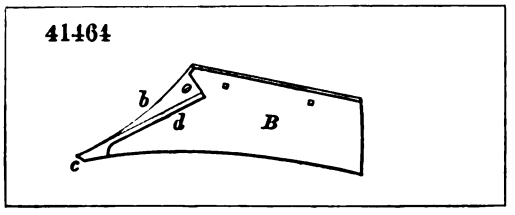

41466

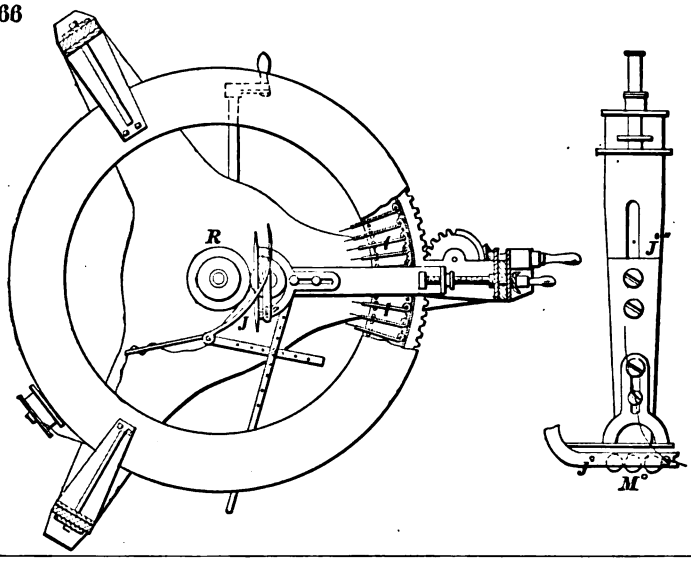

41468

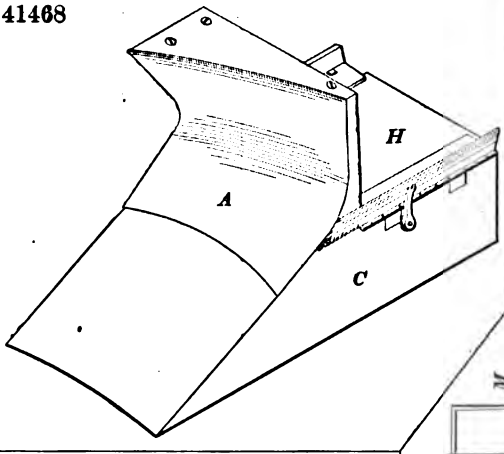

41467

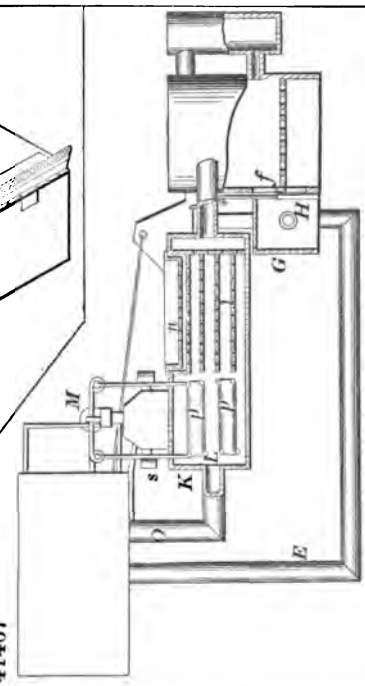

41469

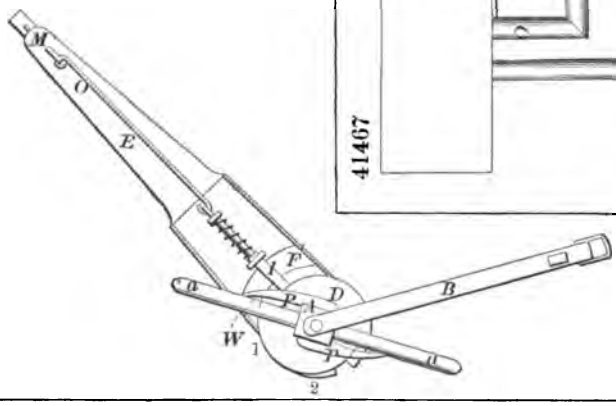

41470

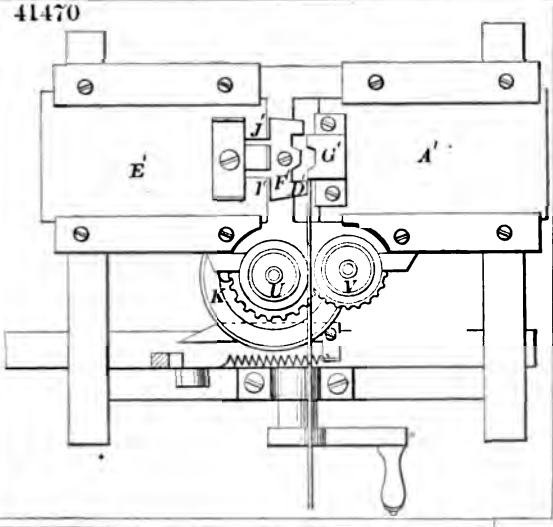

41471

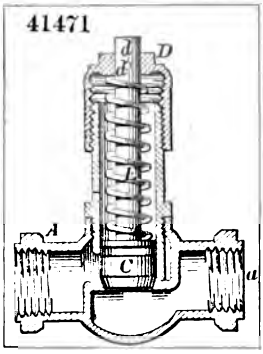

41473

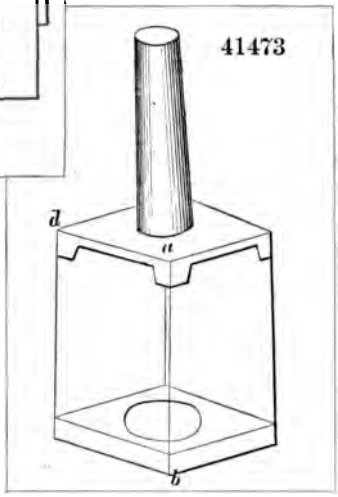

41474

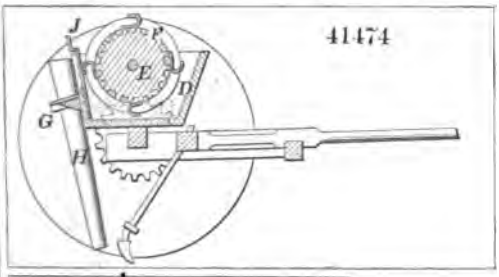

41475

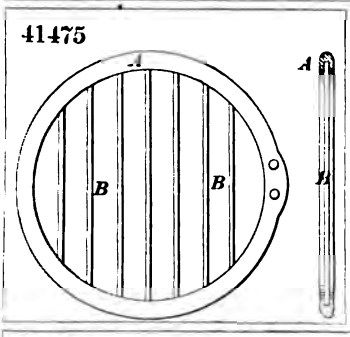

41476

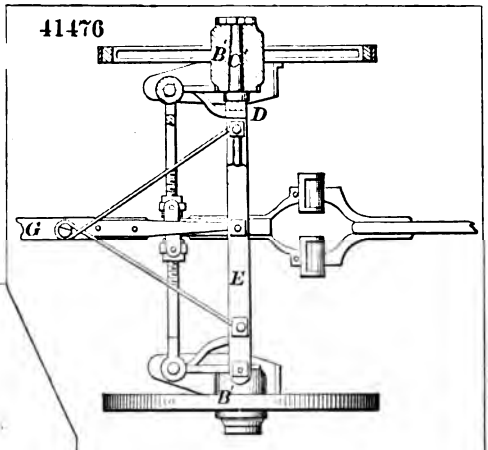

41472

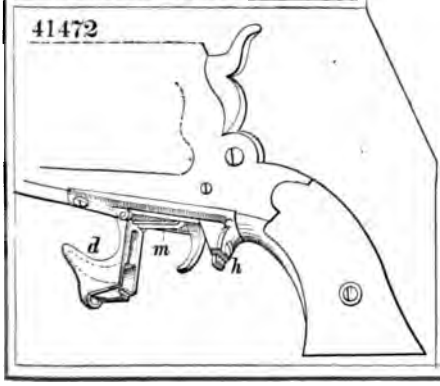

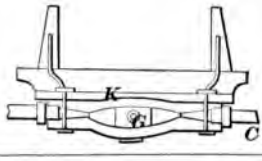

41477

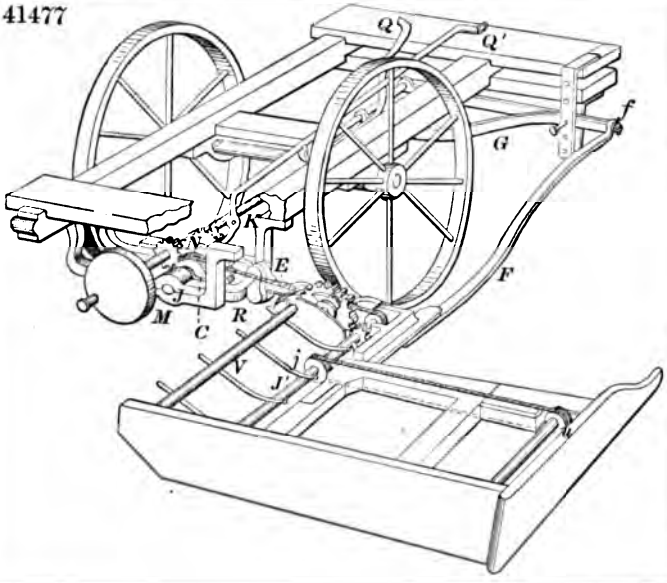

41481

41479

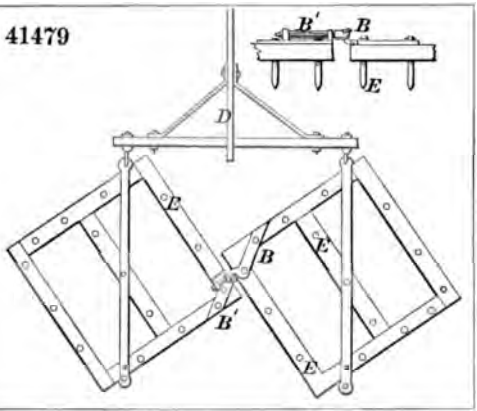

41478

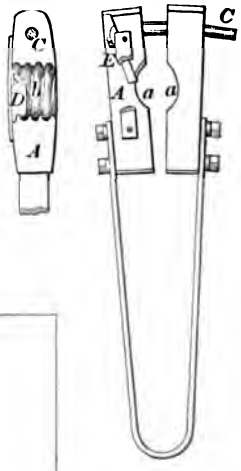

41480

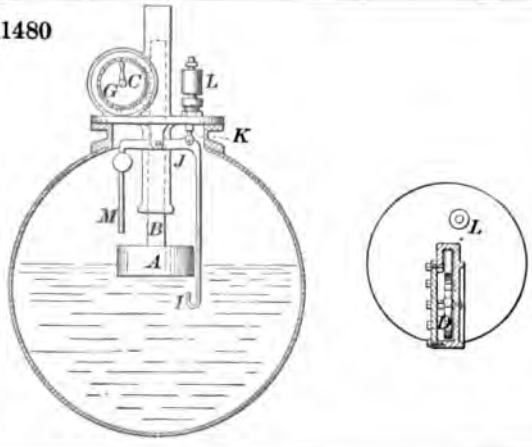

41482

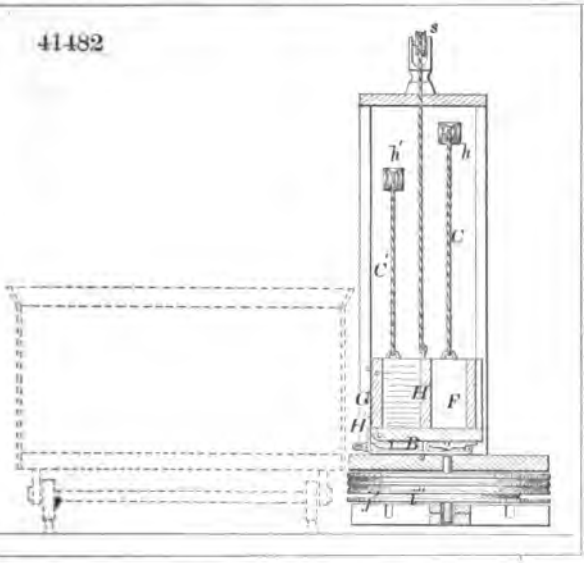

41483

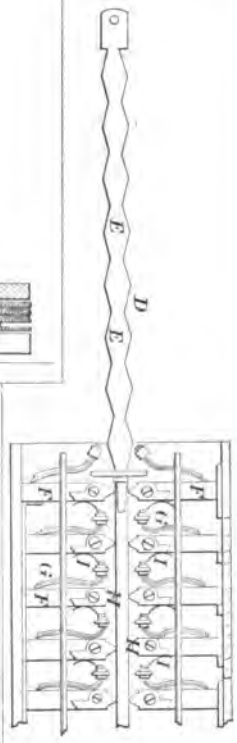

41485

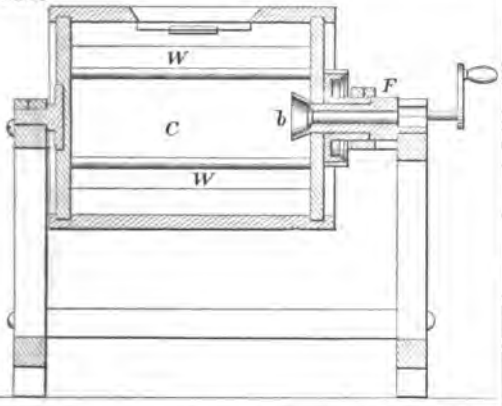

41484

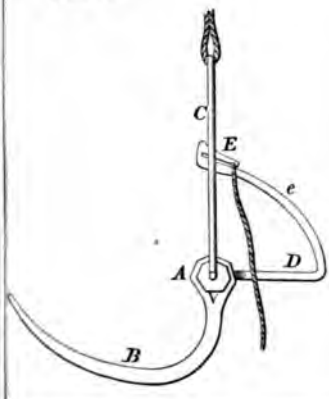

41486

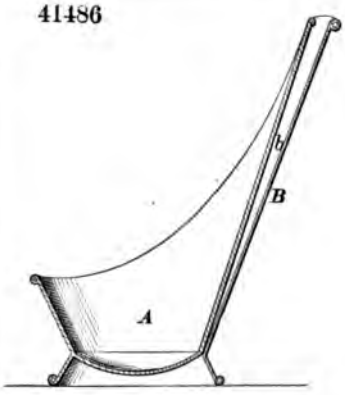

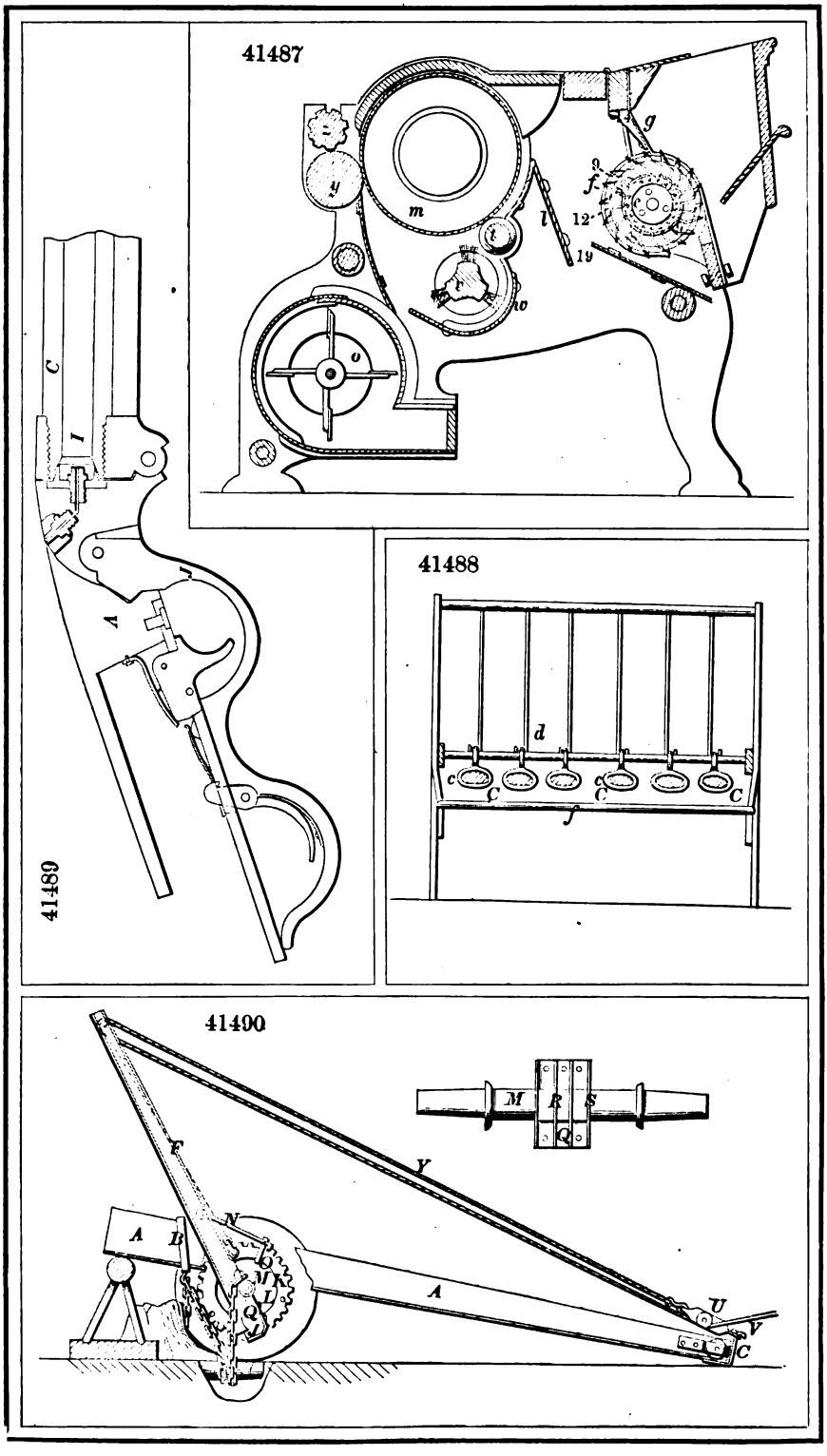
41487
41488
41489
41490
C
I
A
m
y
g
f
12
l
19
o
d
c
M
R
S
Q
F
Y
N
B
L
U
V

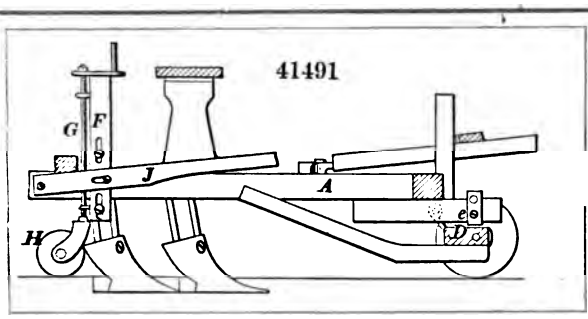
41491
G
F
J
A
H
D

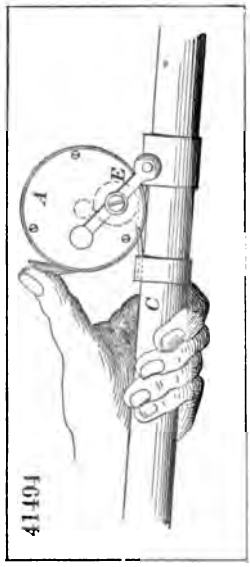
41494
A
E
C

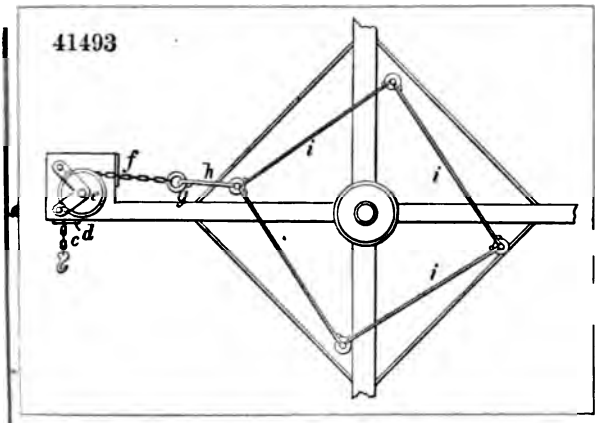
41493
f
h
g
c
d
e
i
i
i

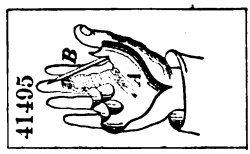
41495
B
A

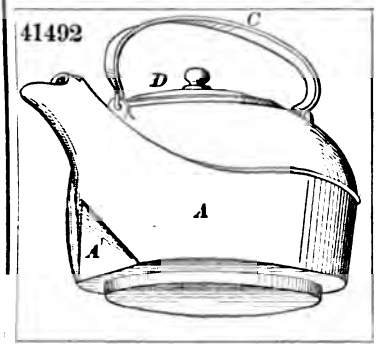
41492
C
D
A
A'

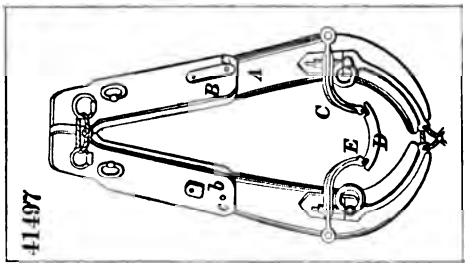
41497
A
B
C
E
D
b

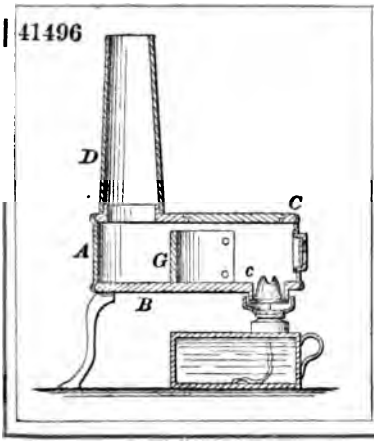
41496
D
C
A
G
c
B

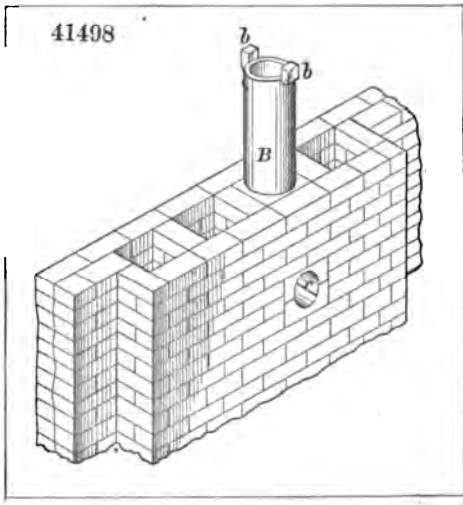
41498
b
b
B

41499

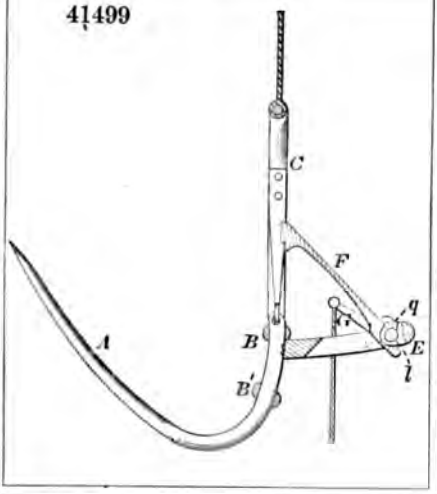

41502

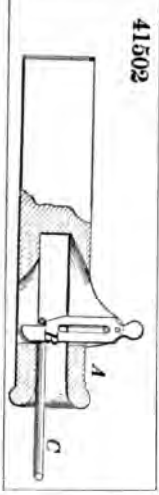

41500

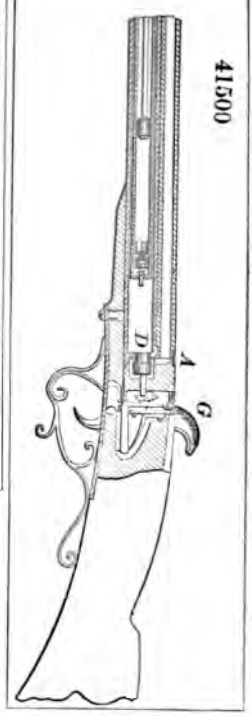

41501

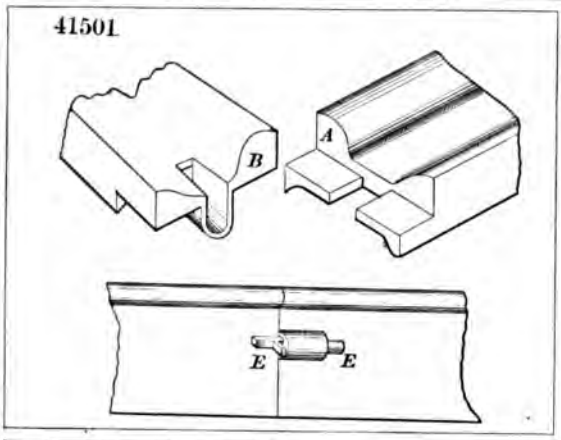

41505

41503

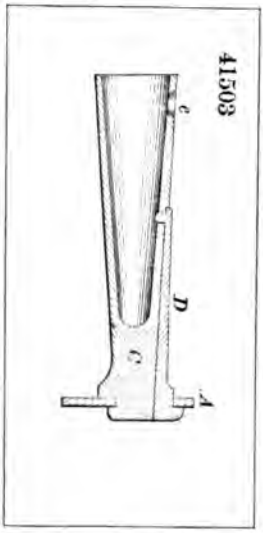

41504

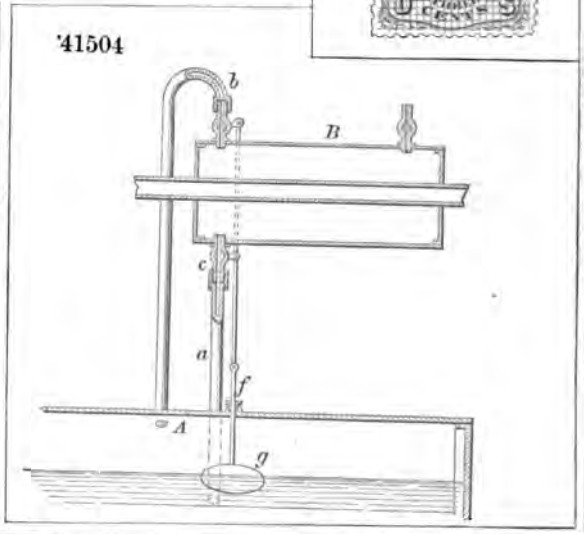

41506

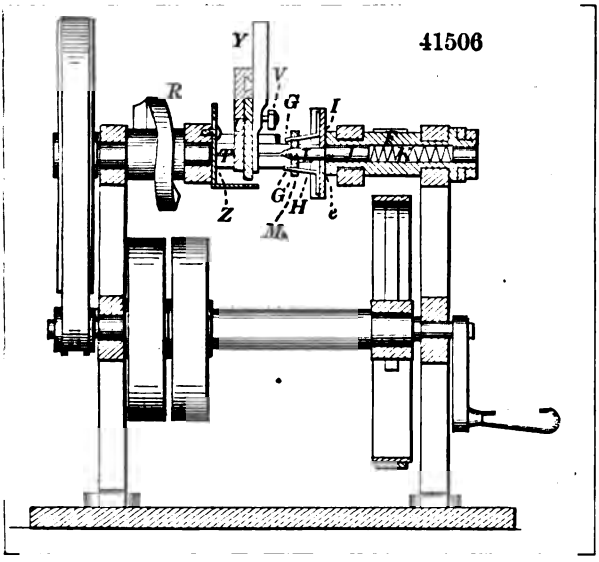

41509

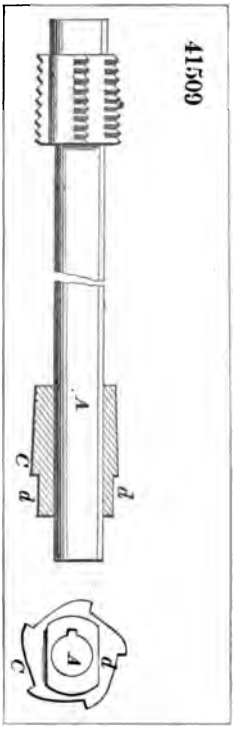

41507

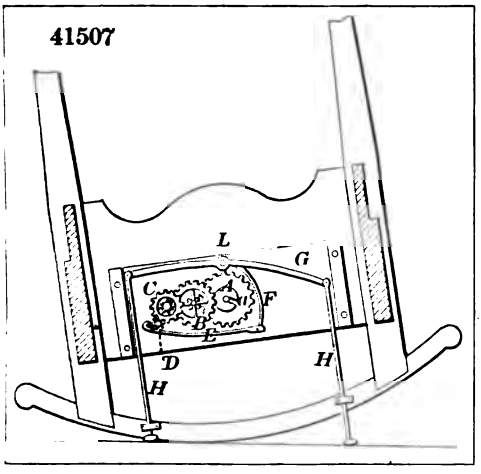

41510

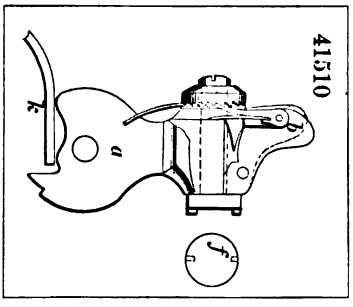

41508

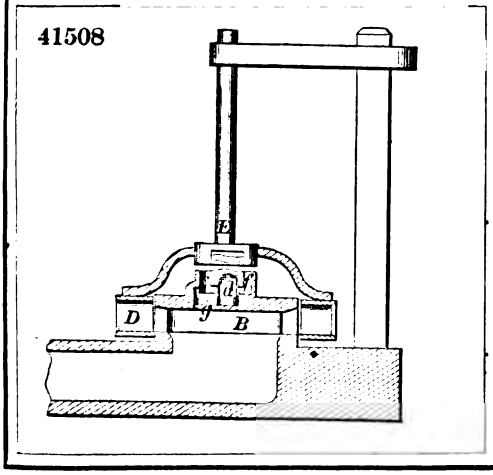

41511

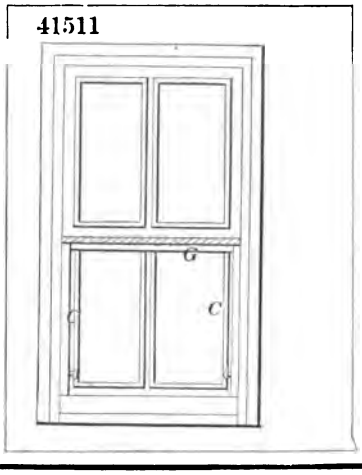

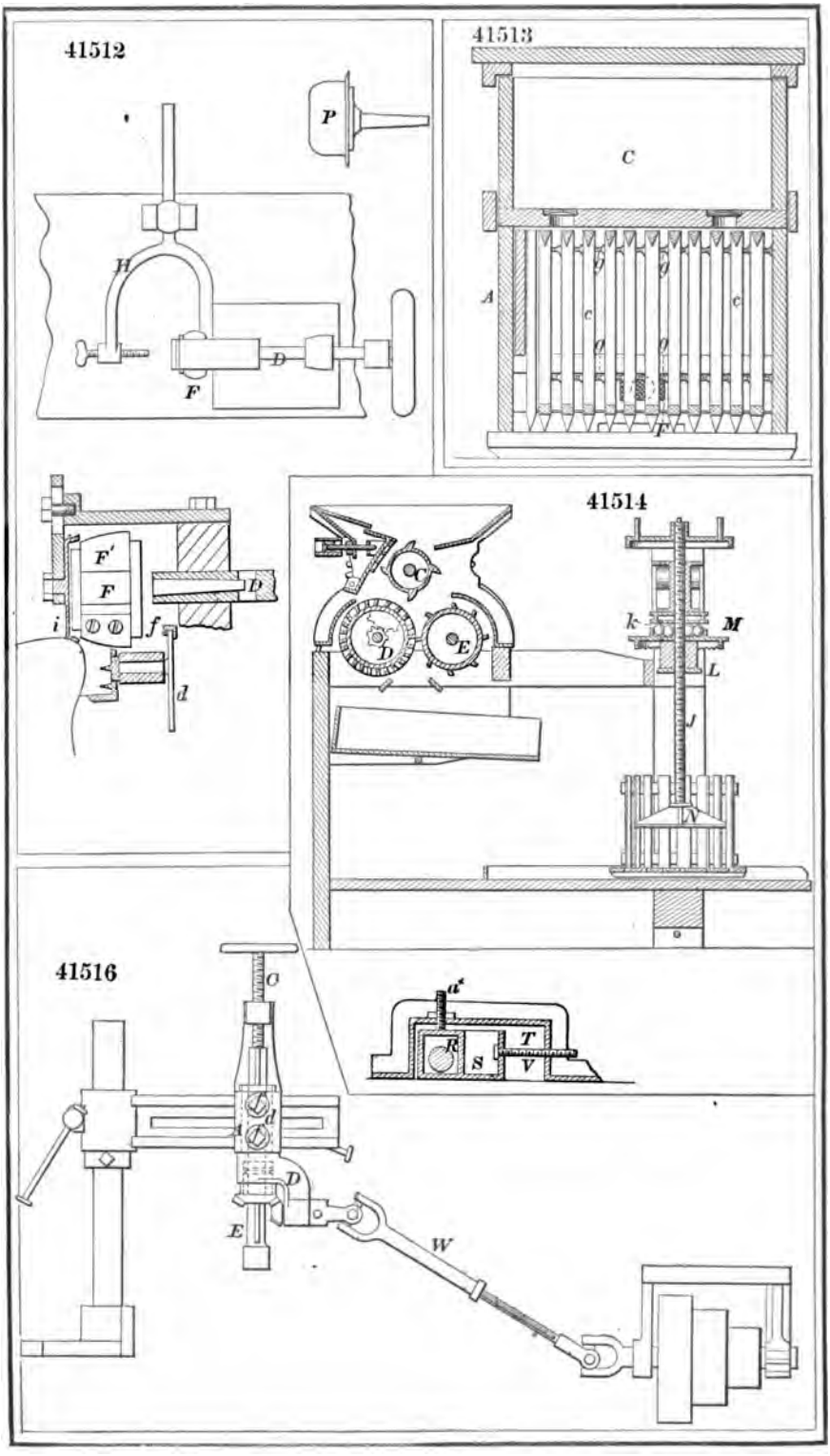
41512
P
H
D
F
41513
C
A
c
F
F'
F
D
i
f
d
41514
C
D
E
k
M
L
J
N
a'
R
S
T
V
41516
C
d
A
D
E
W

41517

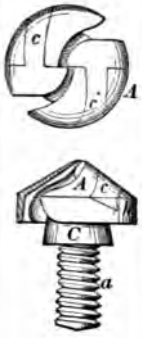

41520

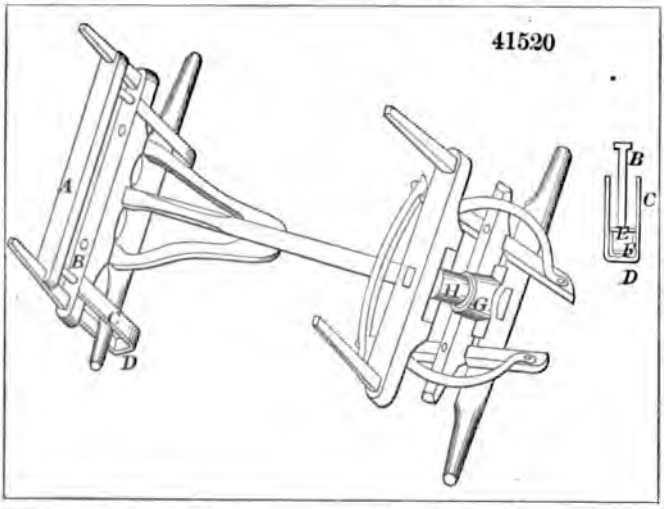

41518

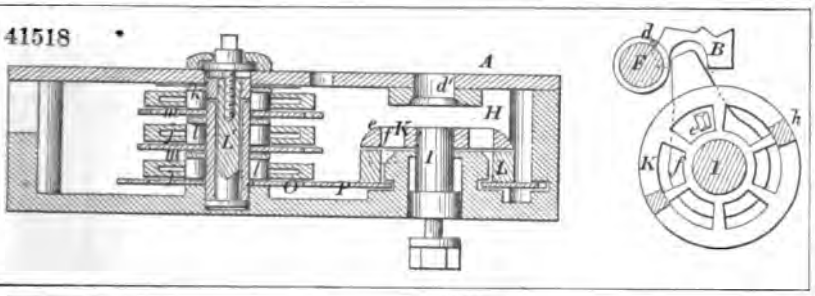

41519

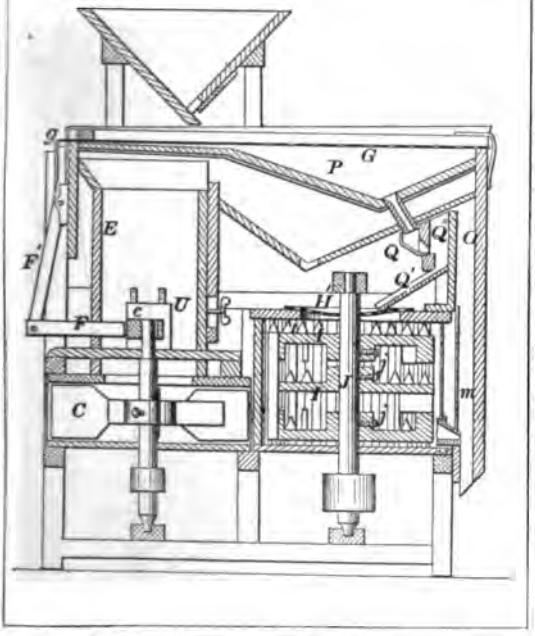

41522

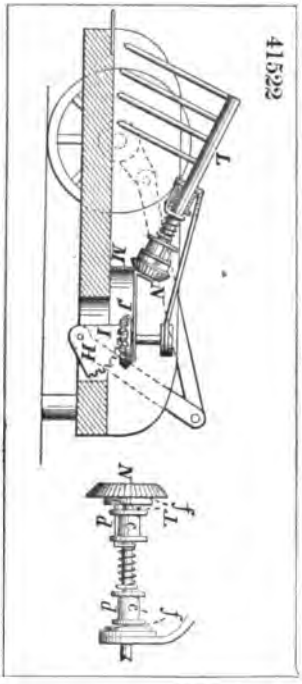

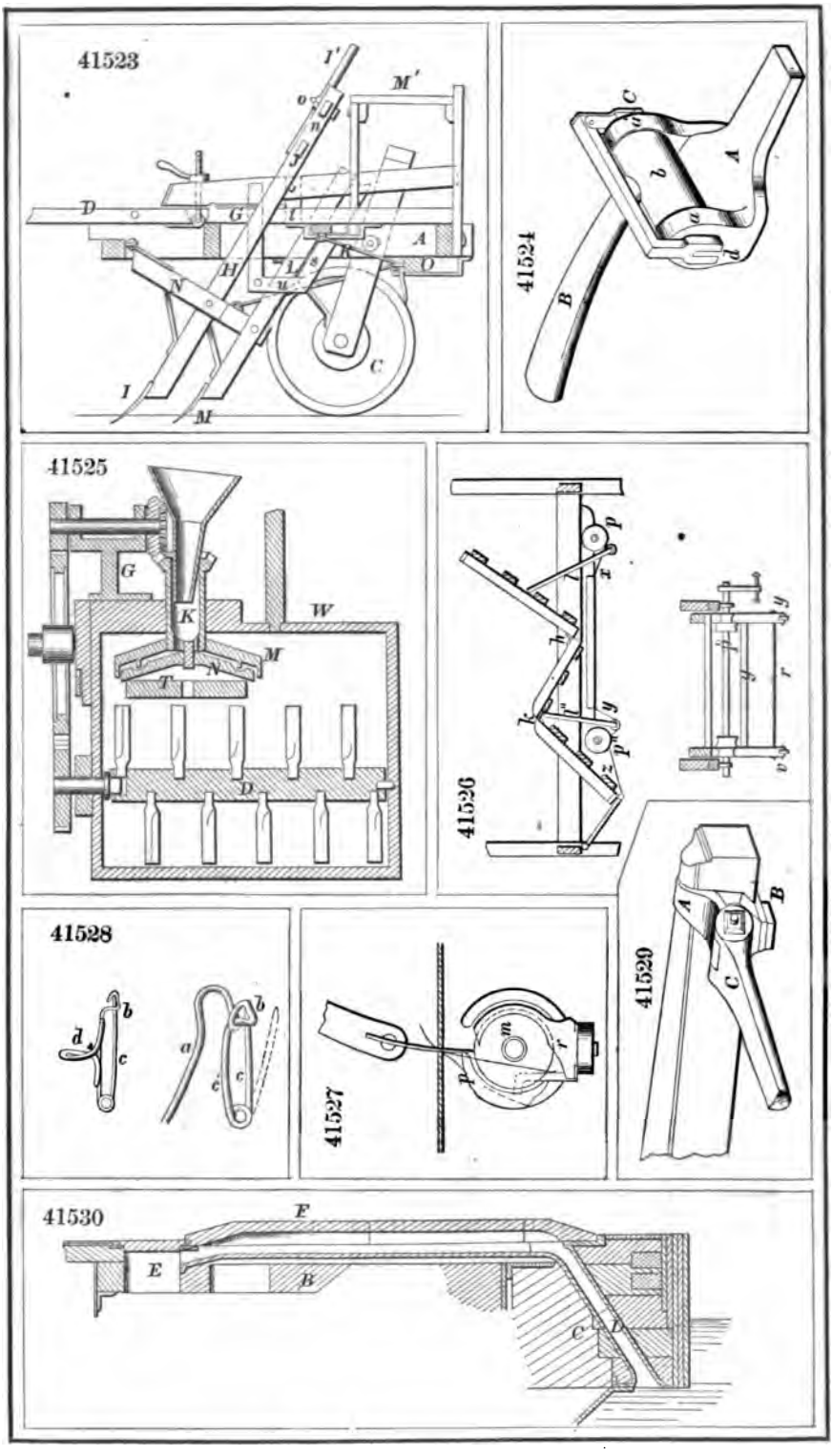
41523
41524
41525
41526
41527
41528
41529
41530

41531

41533

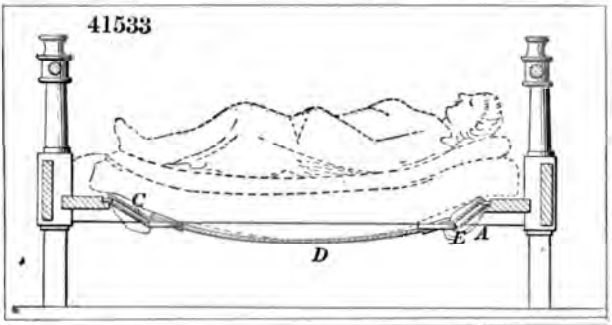

41536

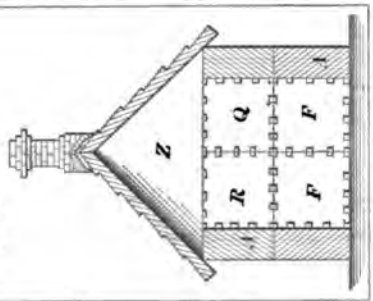

41534

41535

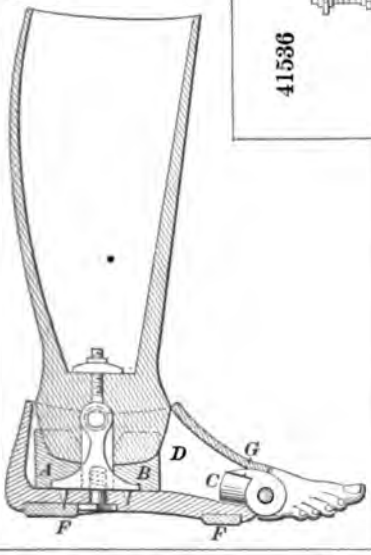

41537

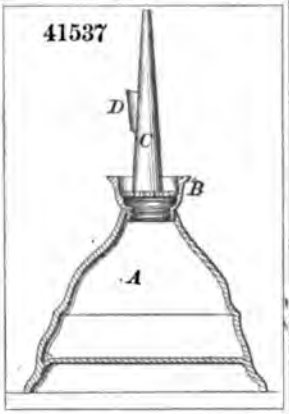

41532

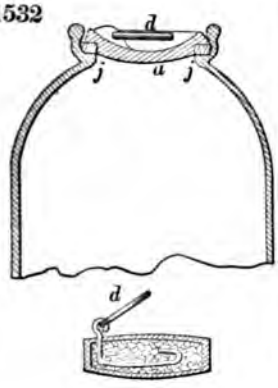

41539

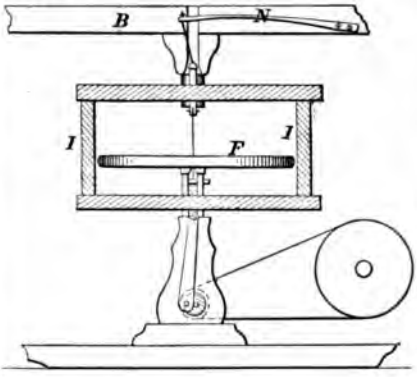

41540

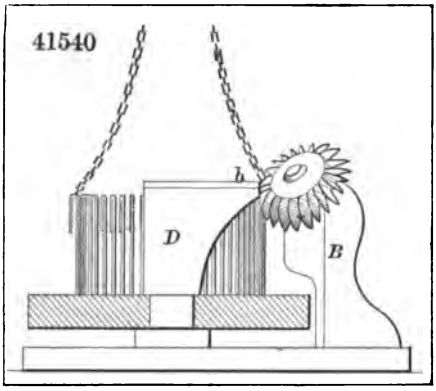

41542

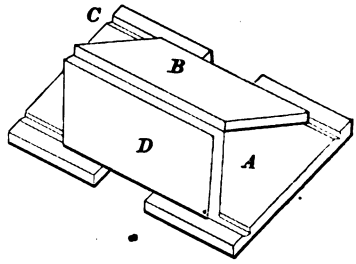

41543

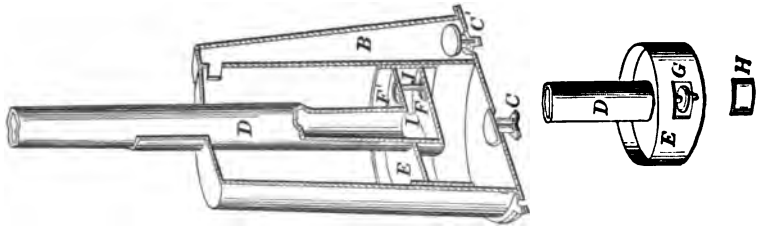

41545

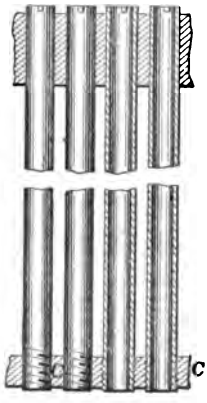

41541

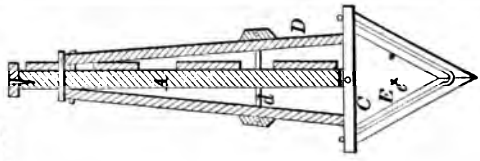

41544

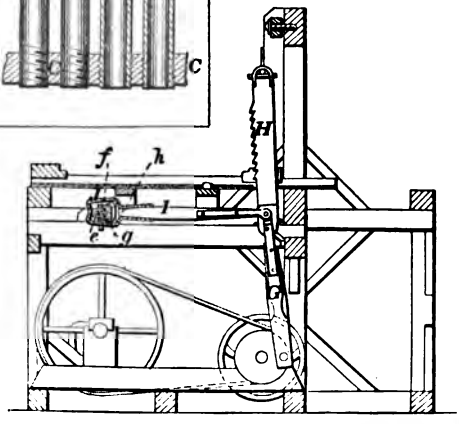

41546

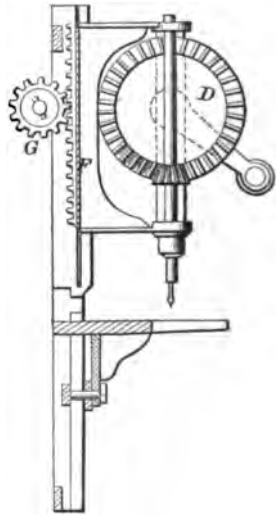

41548

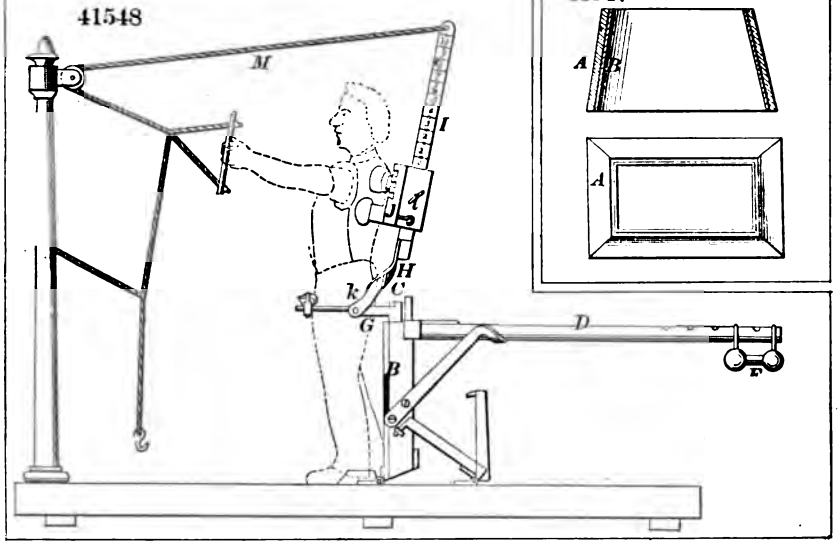

41547

41551

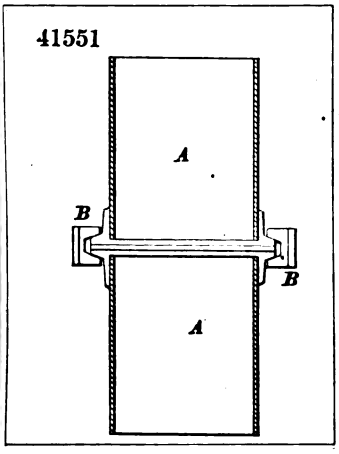

41550

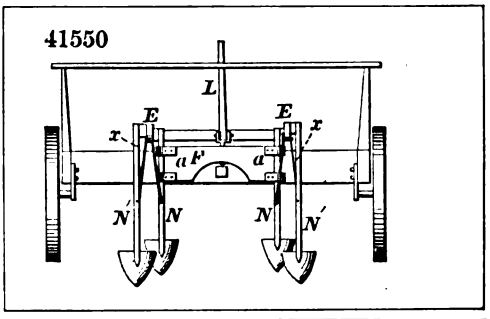

41549

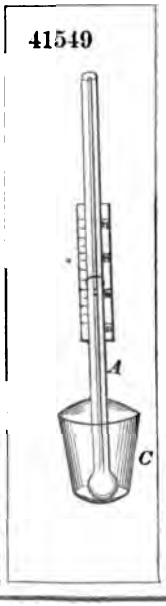

41552

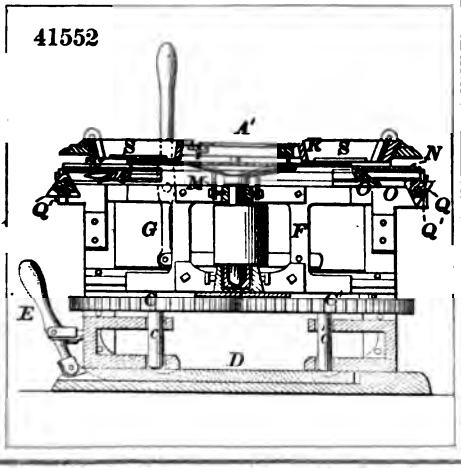

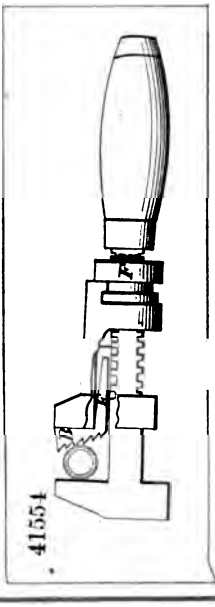

41554

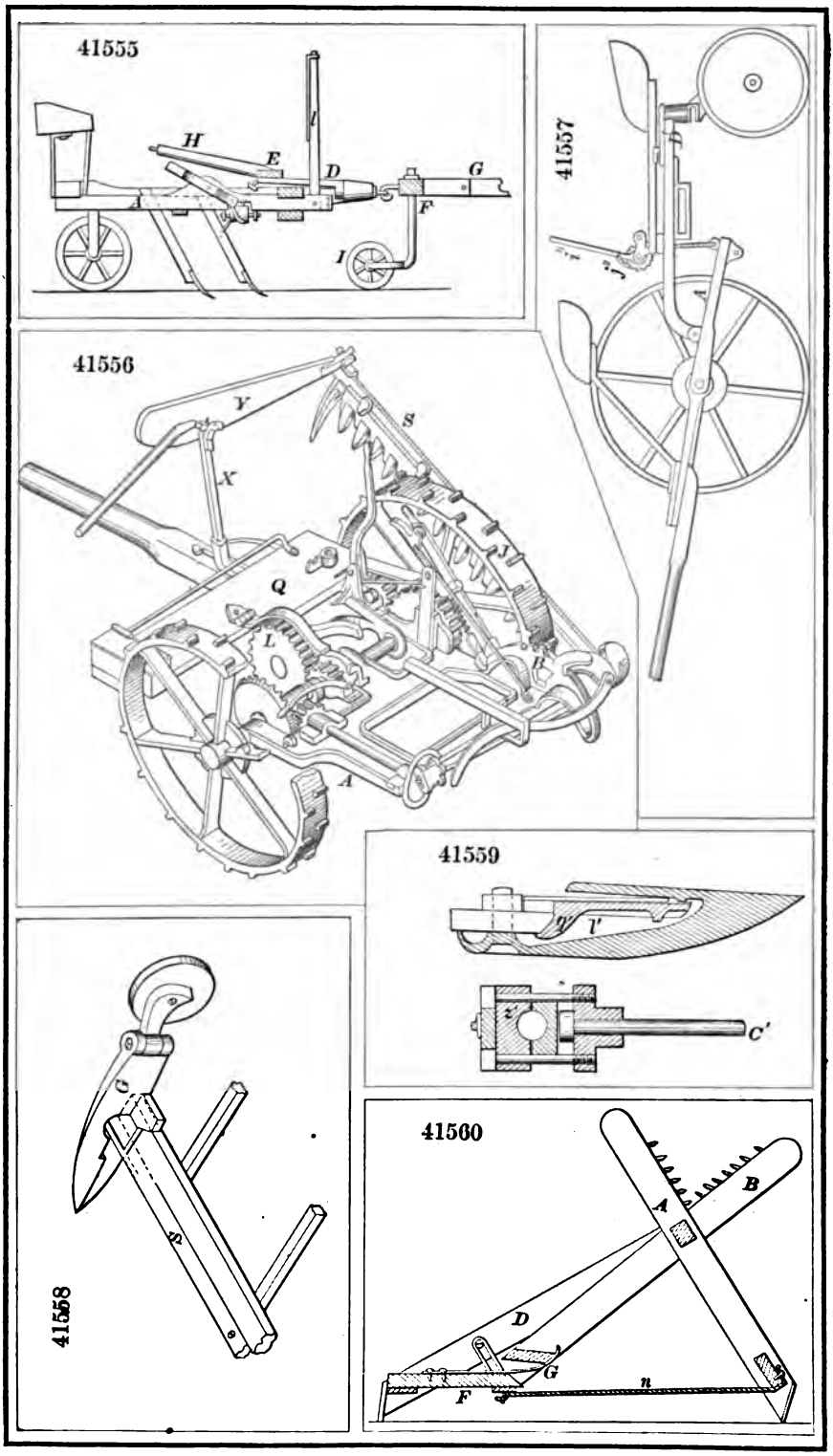
41555
H
E
D
G
F
I
41557
41556
Y
X
S
Q
L
J
B
A
41559
n'
l'
z'
C'
41558
C
D
41560
A
B
D
G
F
n

41561

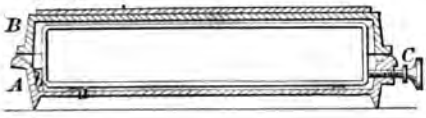

41563

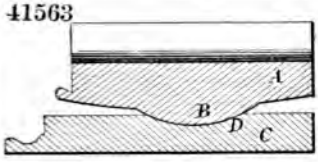

41565

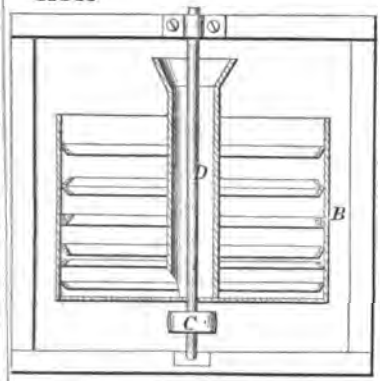

41566

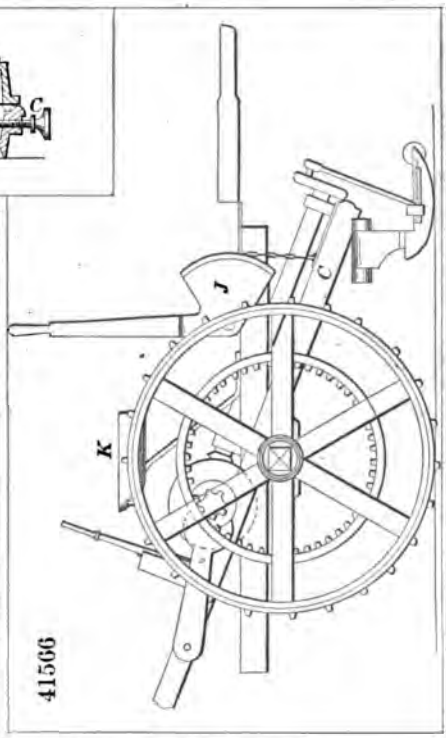

41562

41564.

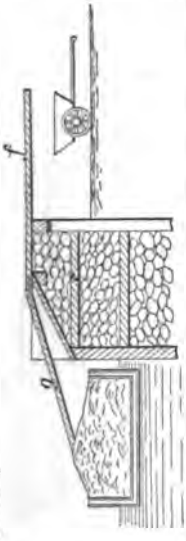

41567

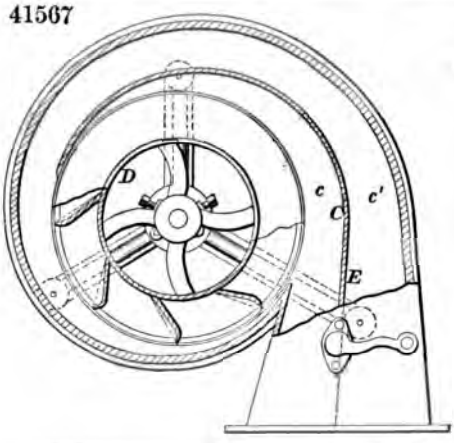

41568

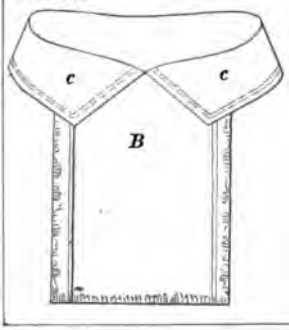

41569

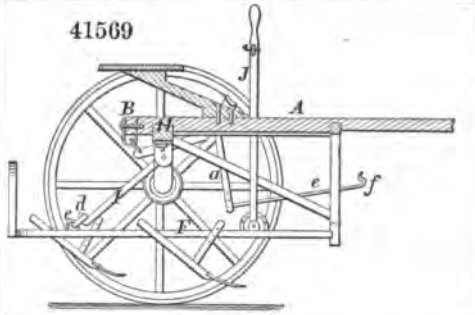

41570

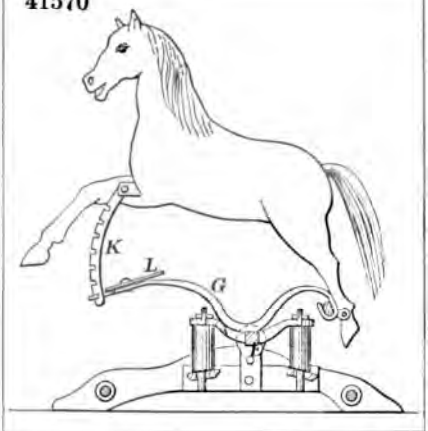

41572

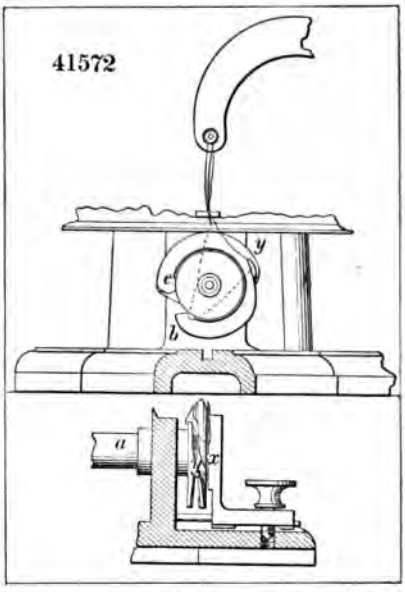

41571

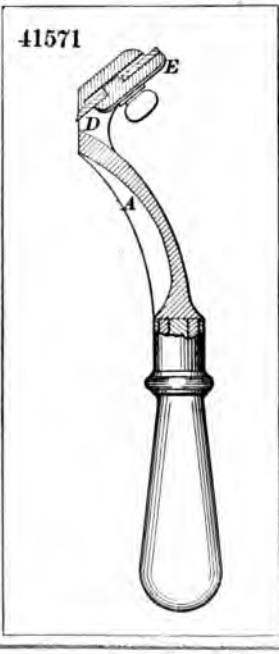

41573

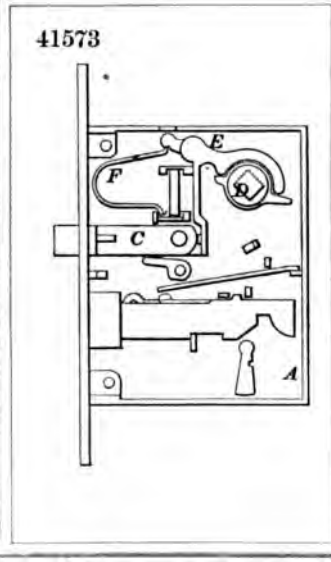

41574

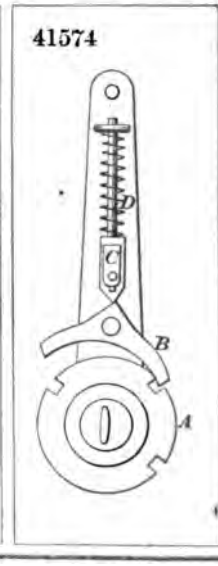

41575

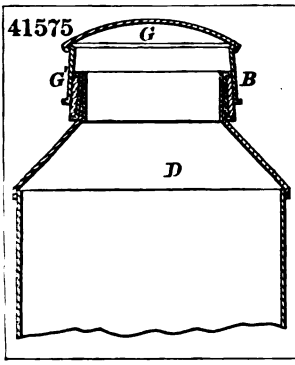

41583

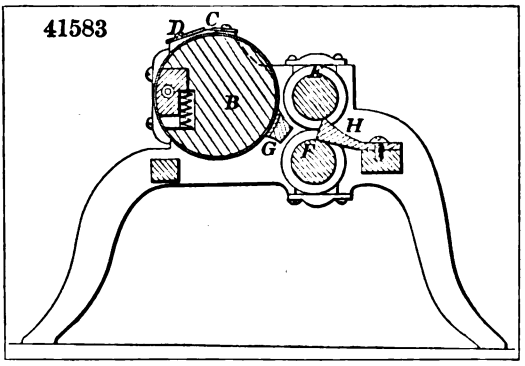

41579

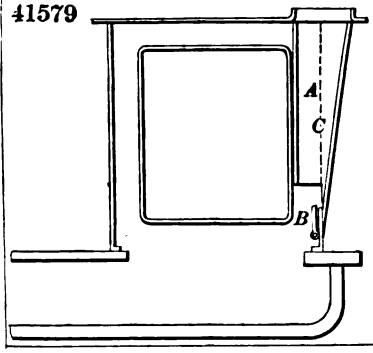

41580

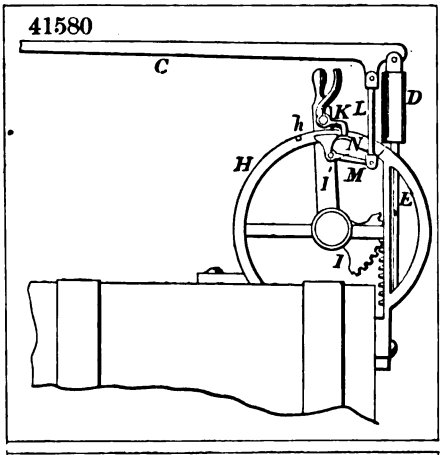

41581

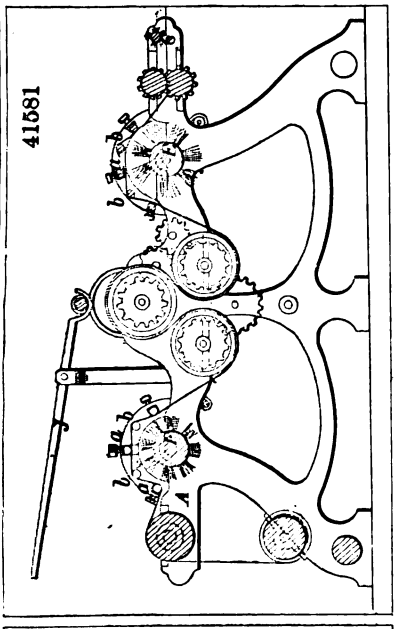

41584

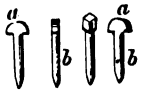

41585

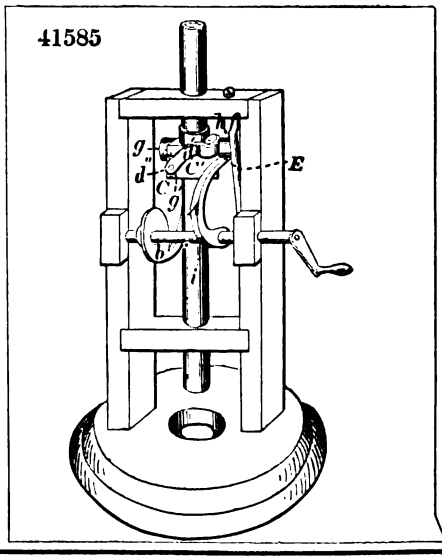

41582

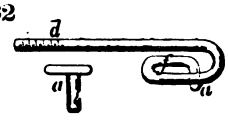

41586

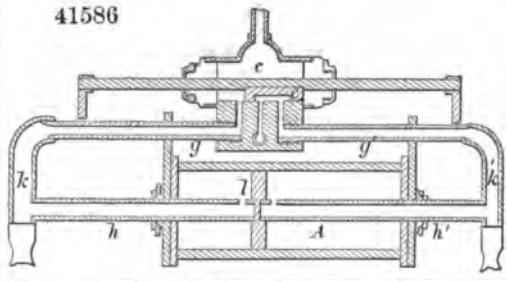

41587

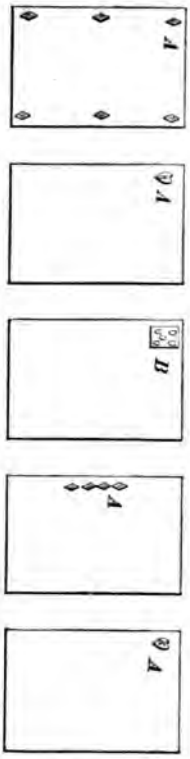

41588

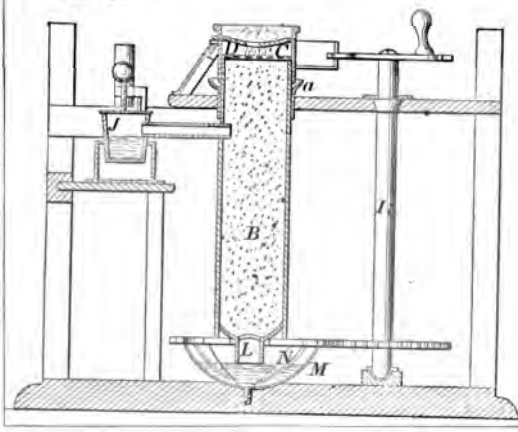

41590

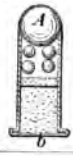

41591

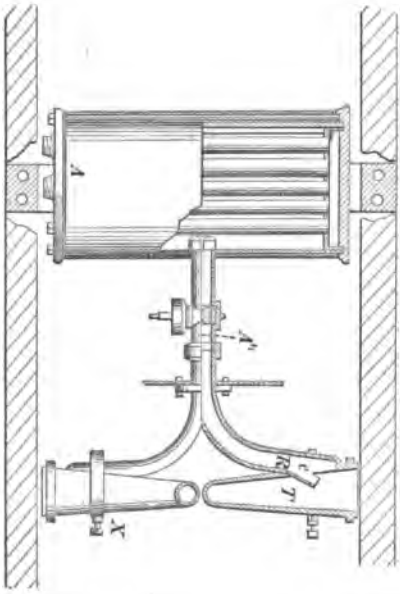

41592

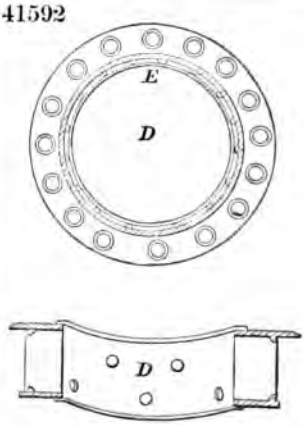

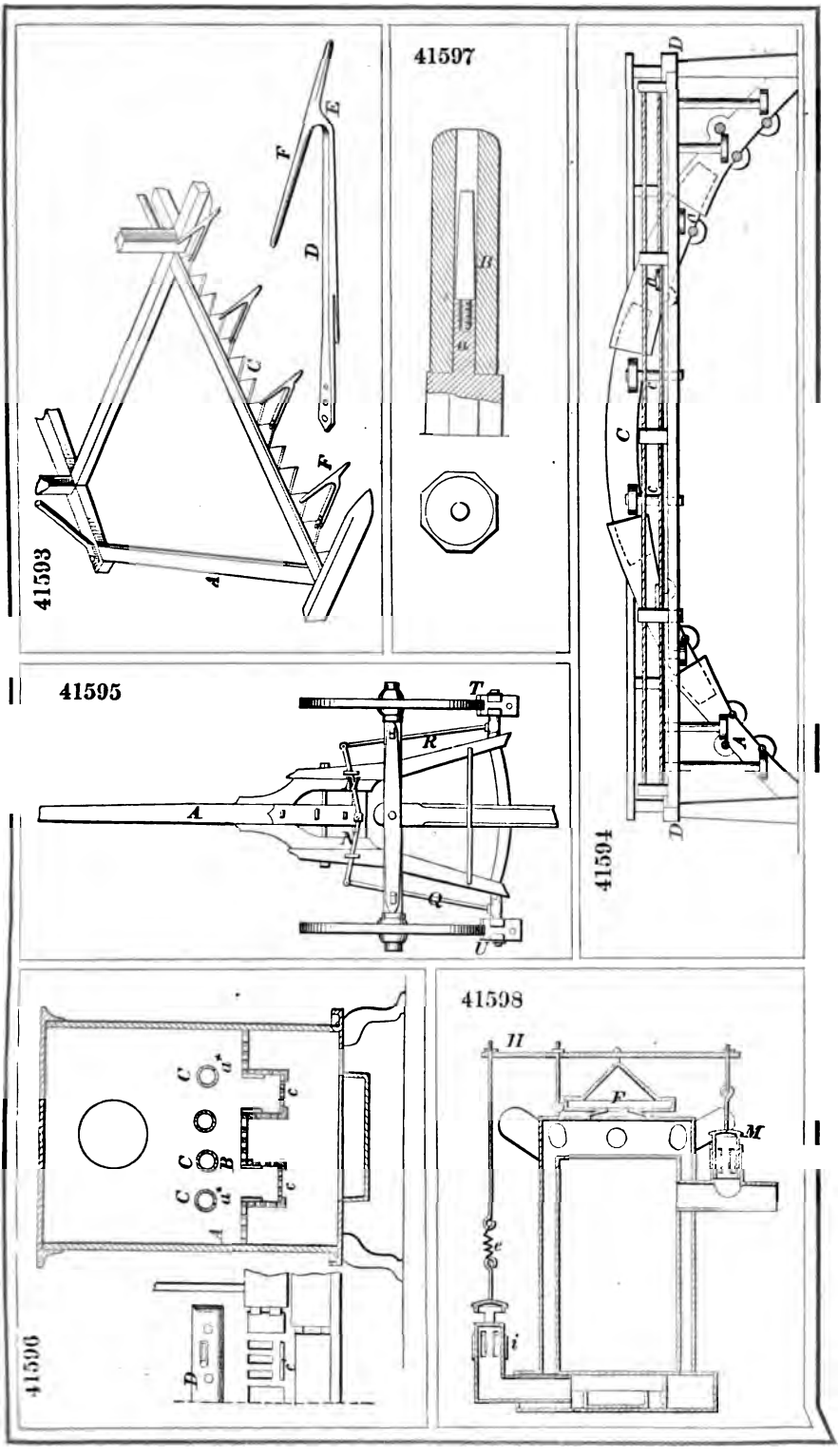
41593
41597
41594
41595
41596
41598

41599

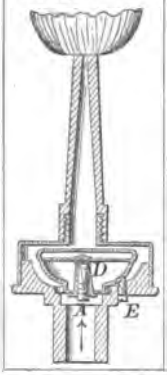

41602

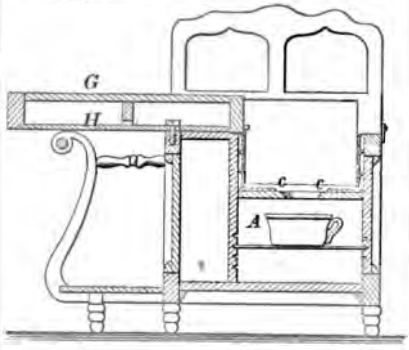

41600

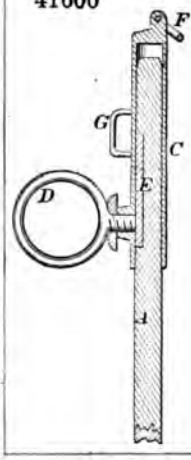

41601

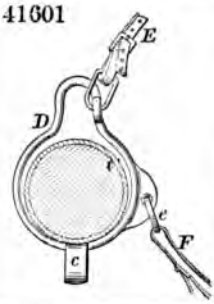

41603

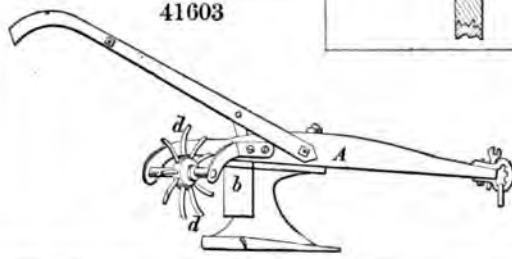

41604

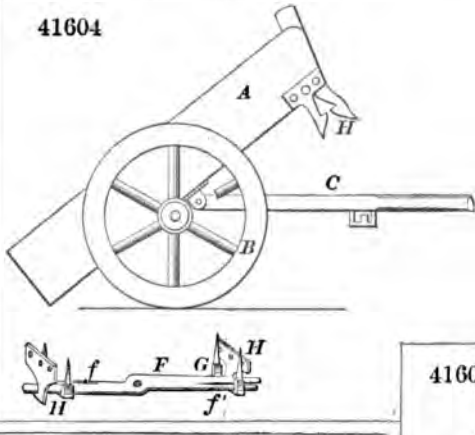

41606

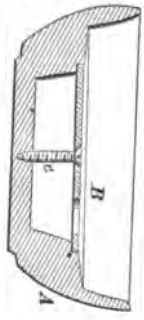

41605

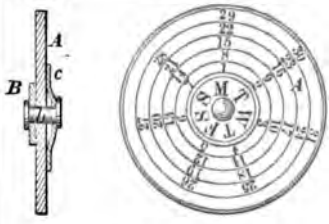

41607

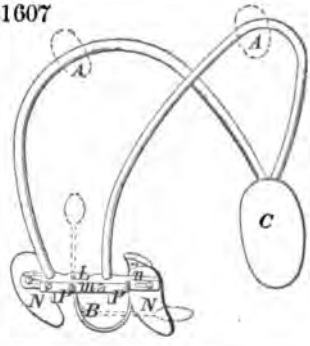

41608

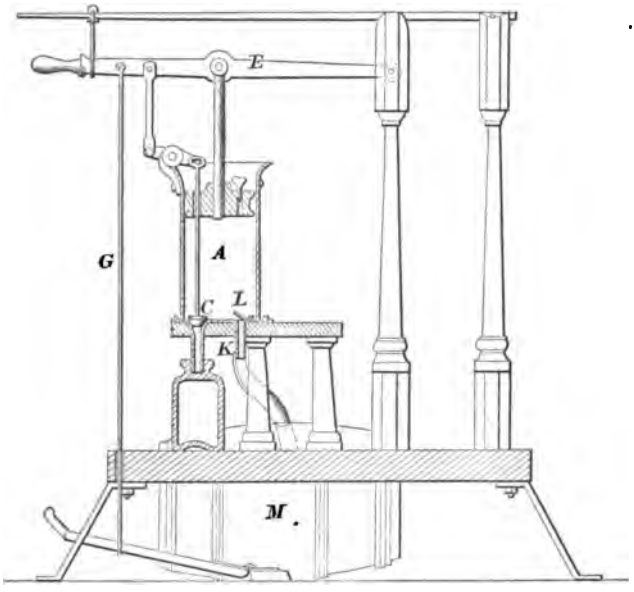

41609

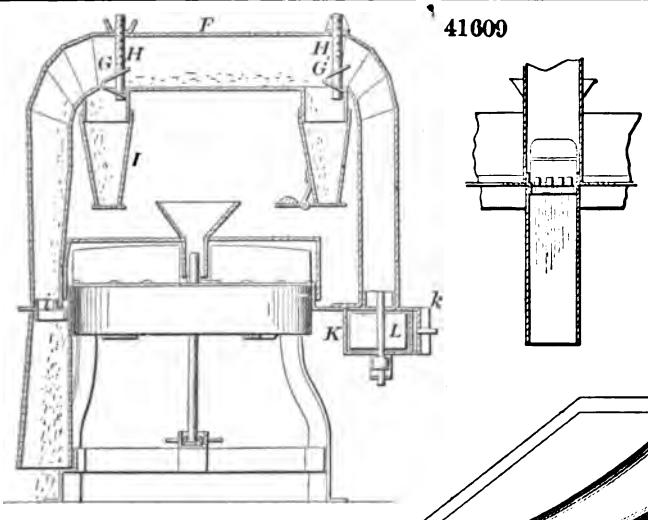

41610

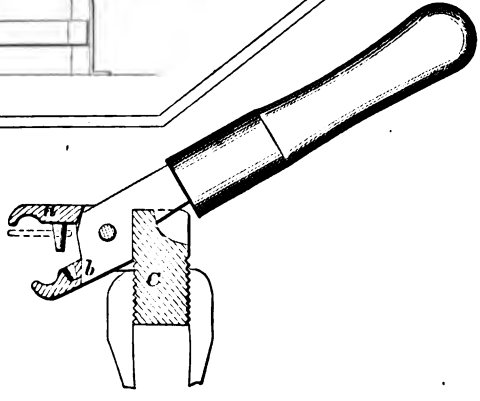

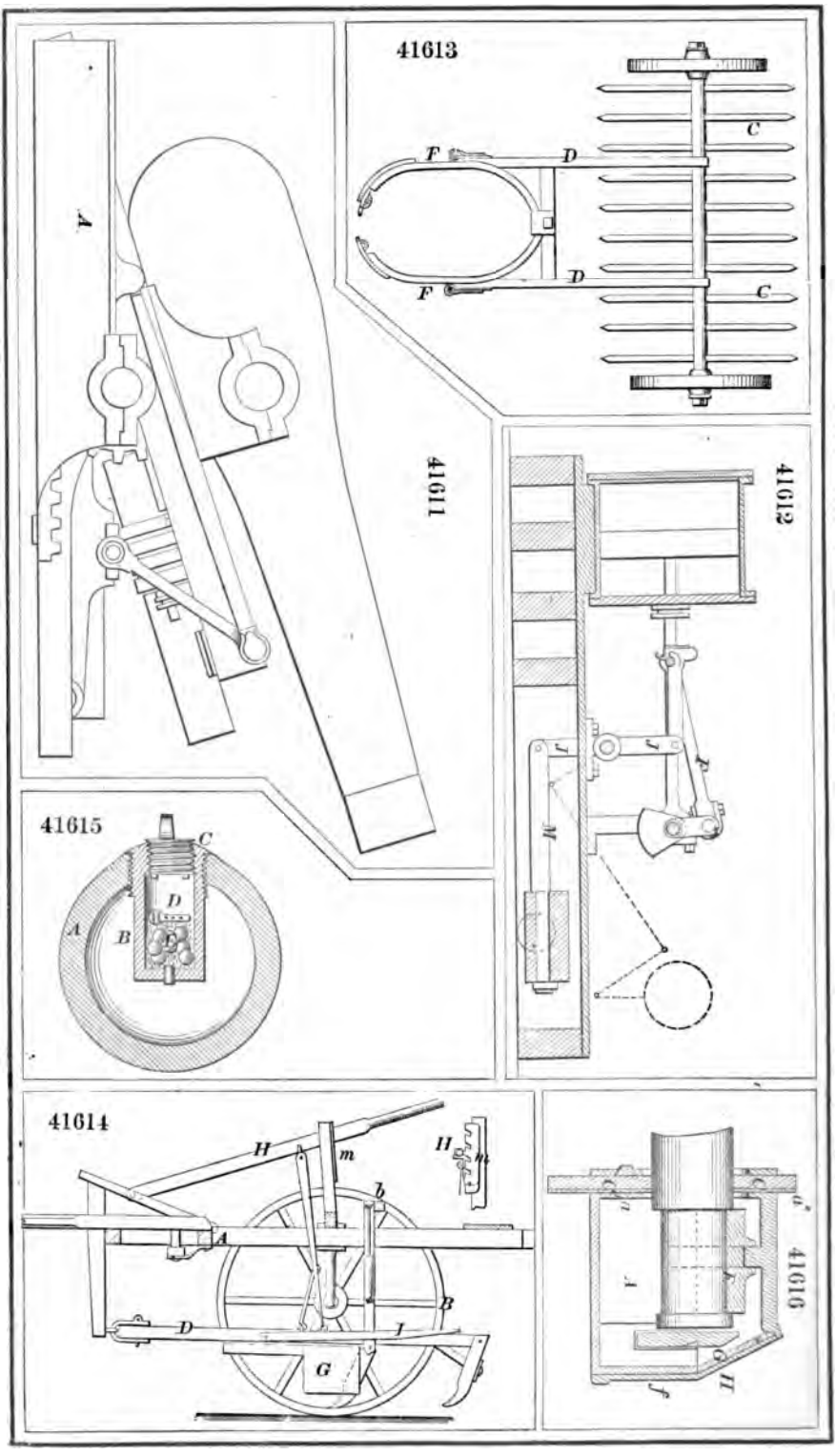
41611
A
41613
C
D
F
41612
M
41615
A
B
C
D
E
41614
H
m
b
A
B
D
J
G
41616
J
H

41617

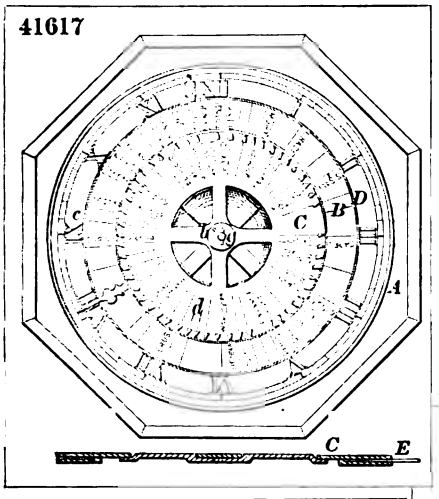

41520

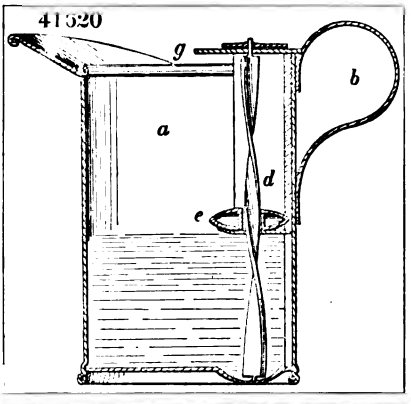

41618

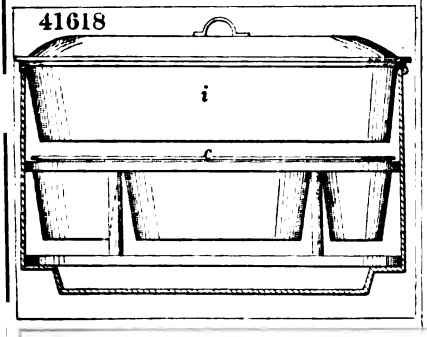

41621

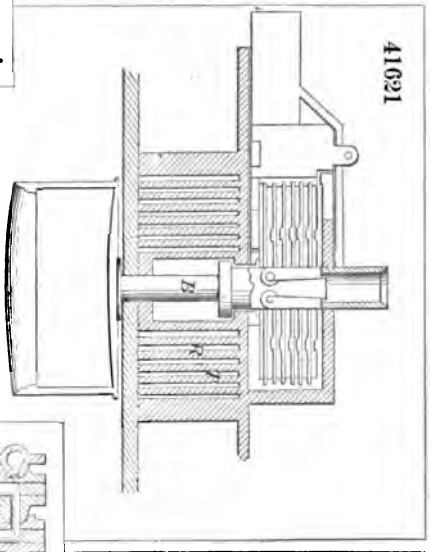

41619

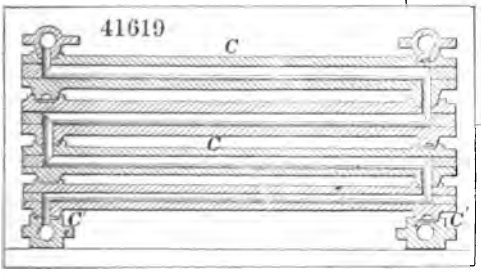

41622

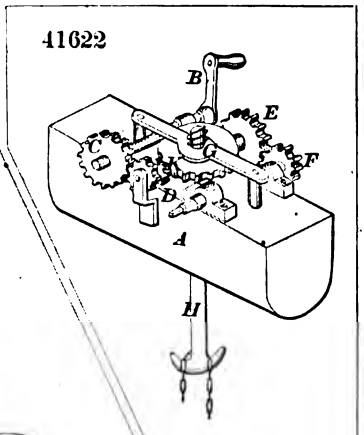

41623

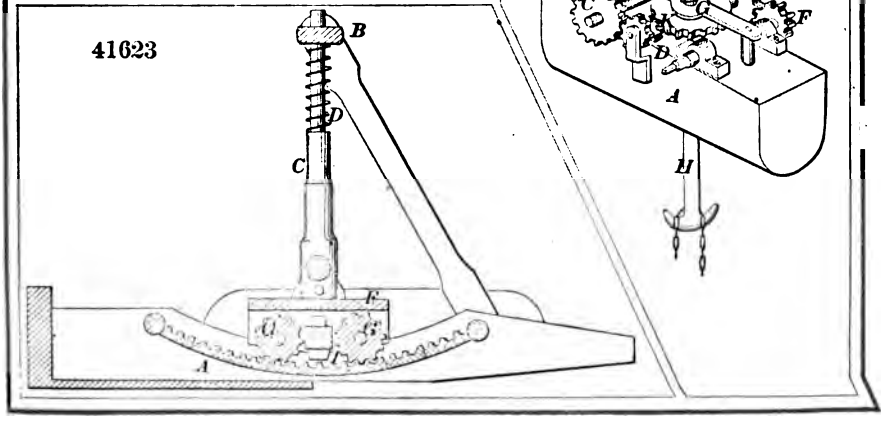

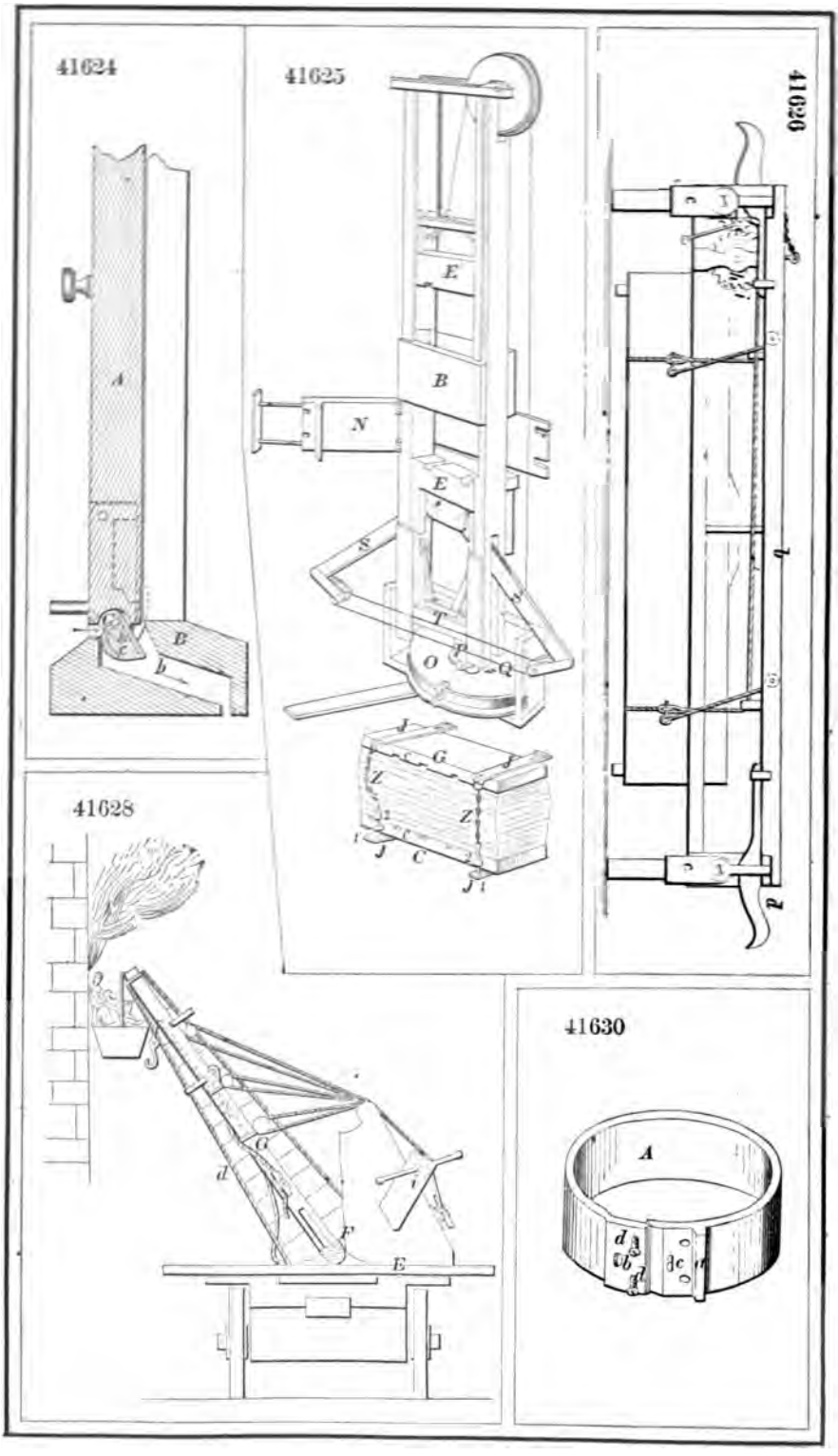
41624
41625
41626
41628
41630

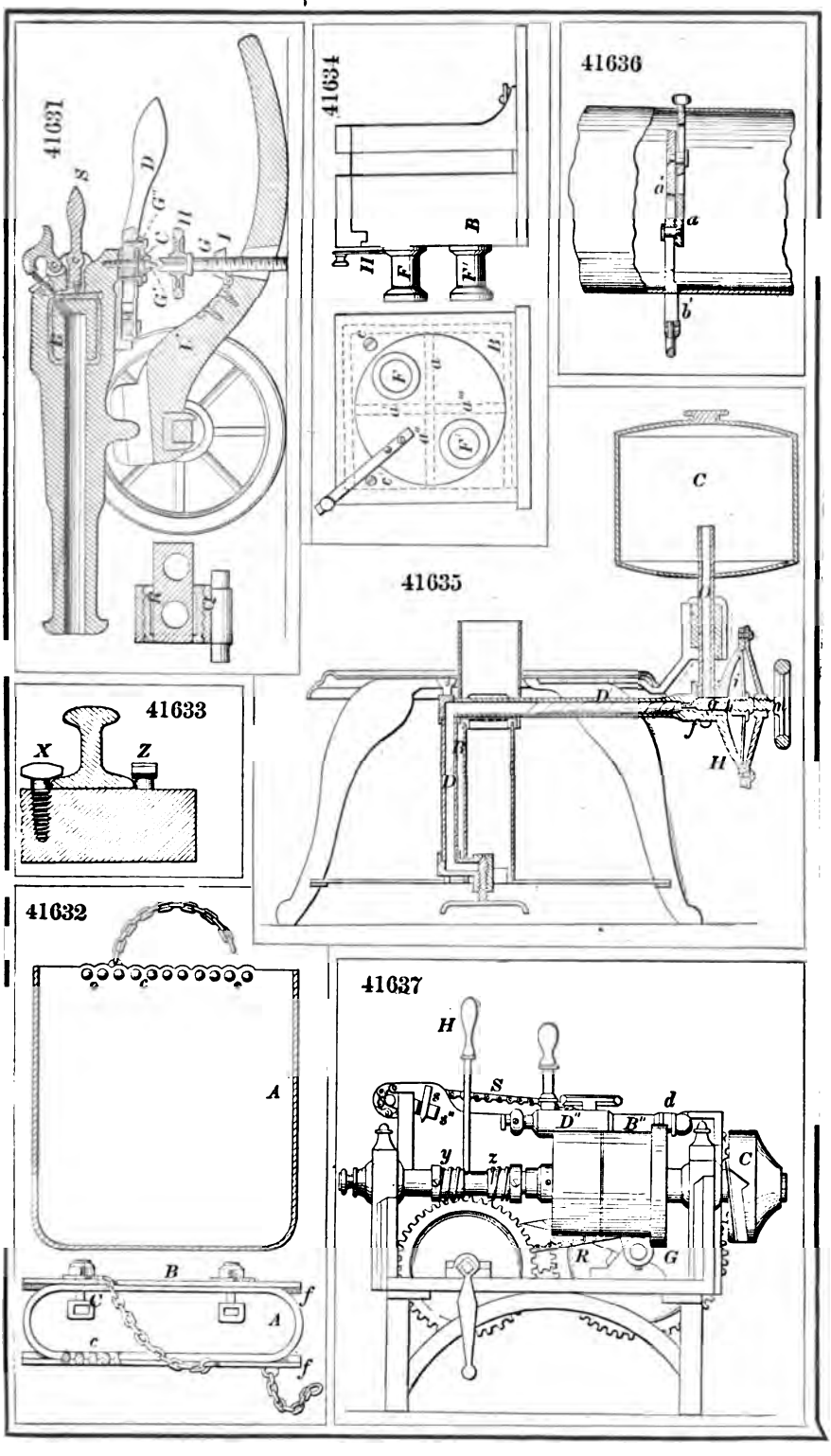
41631
41634
41636
41635
41633
41632
41637

41638

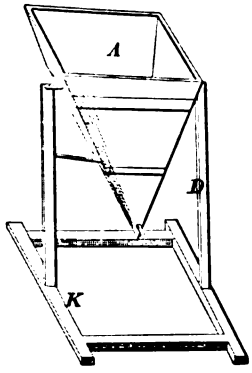

41639

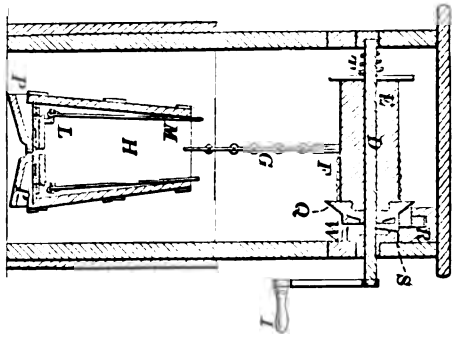

41640

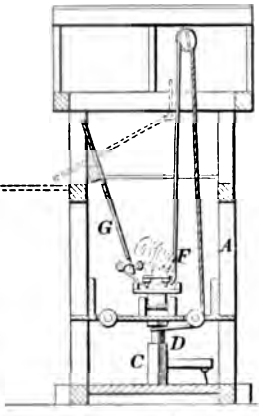

41641

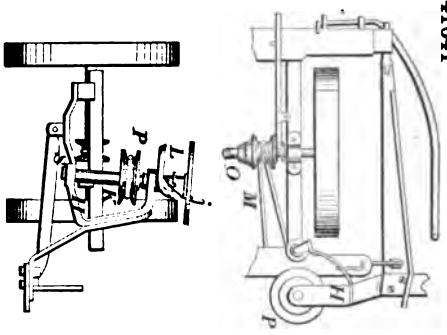

41643

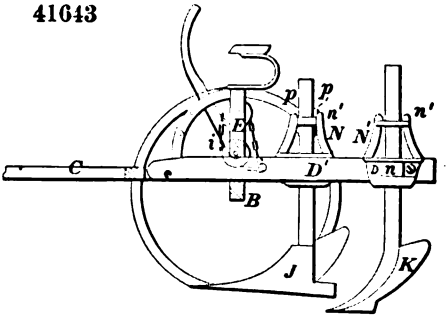

41644

41645

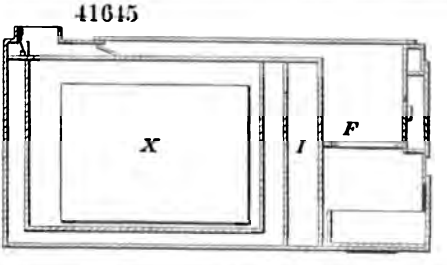

41616

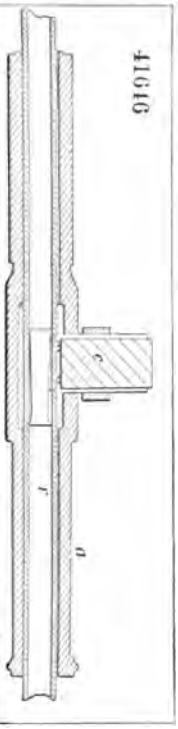

41648

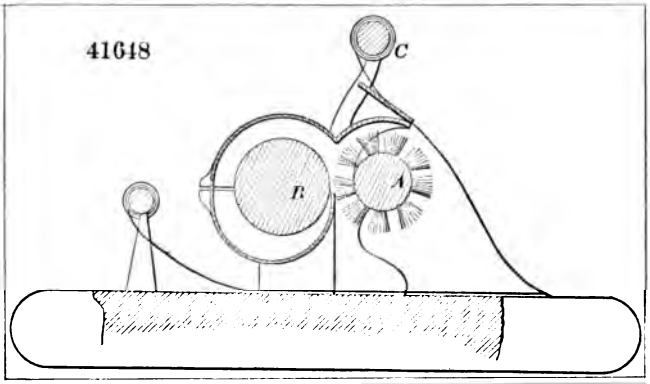

41650

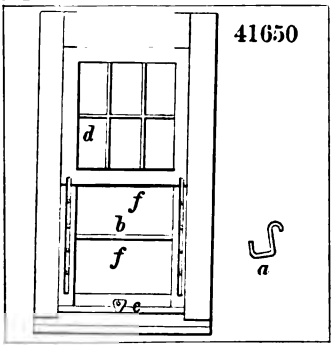

41649

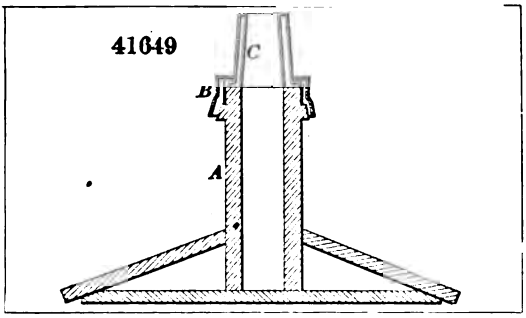

41651

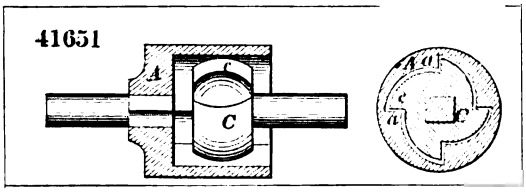

41652

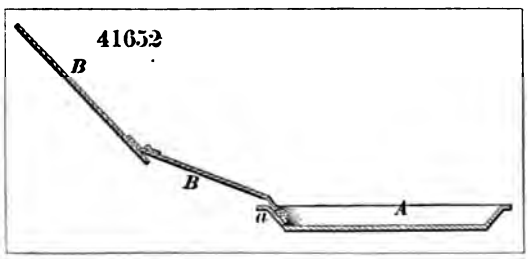

41617

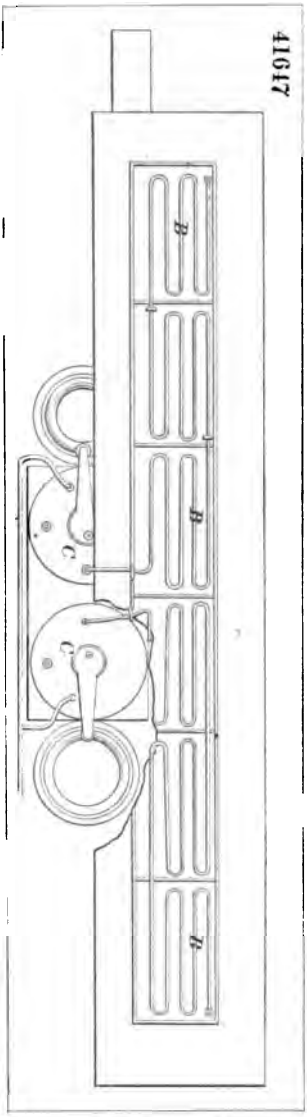

41653

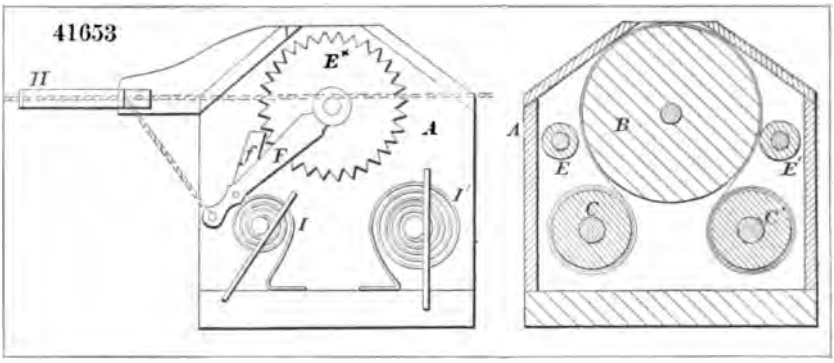

41654

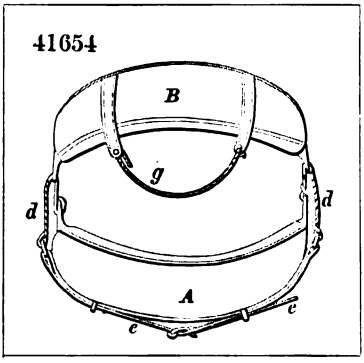

41658

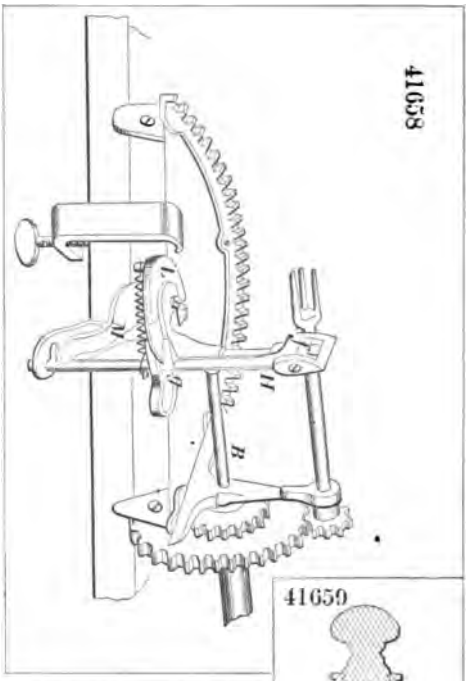

41655

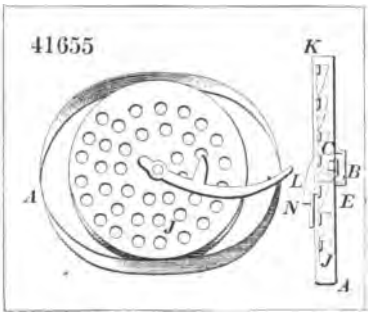

41659

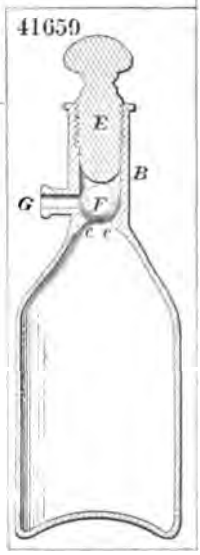

41656

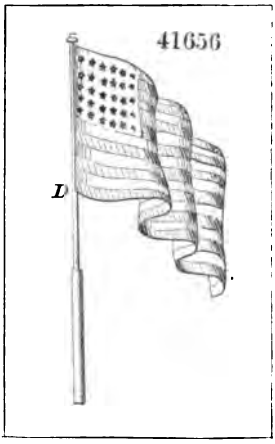

41657

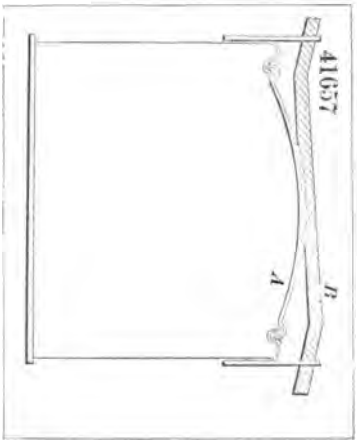

41660

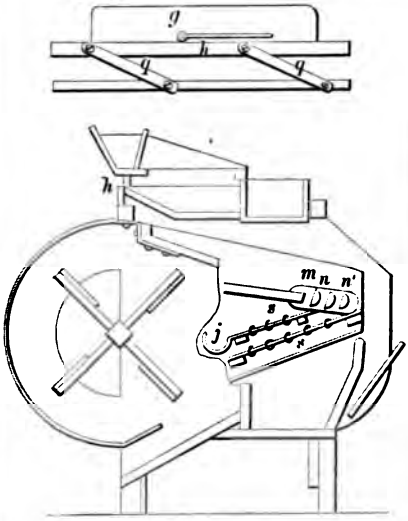

41664

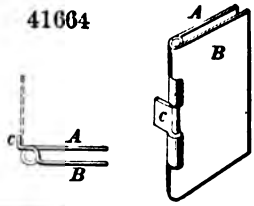

41665

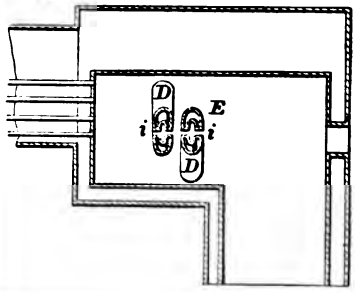

41662

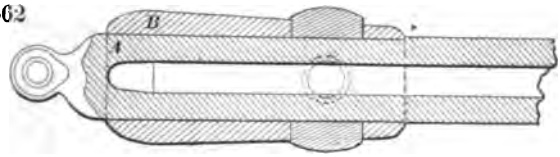

41661

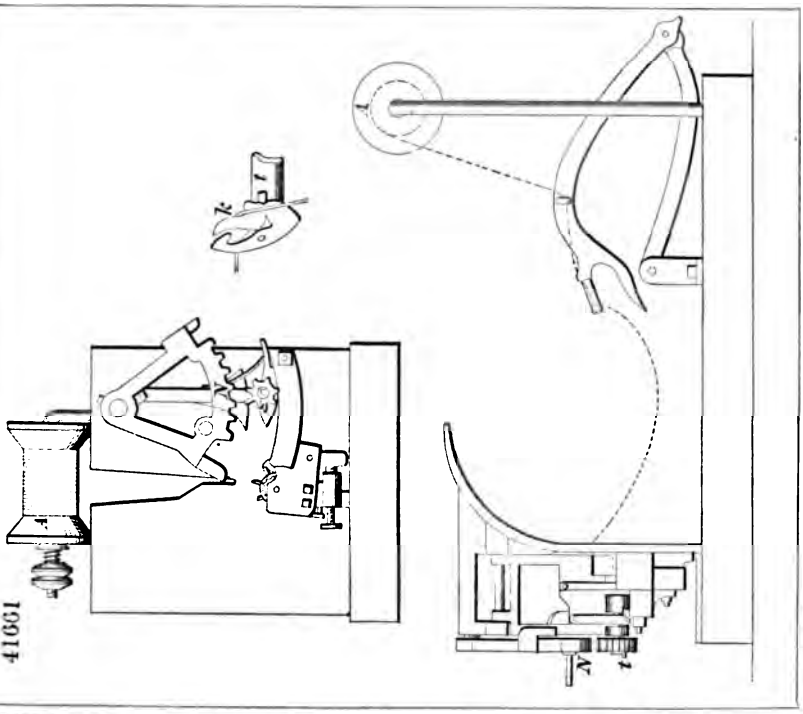

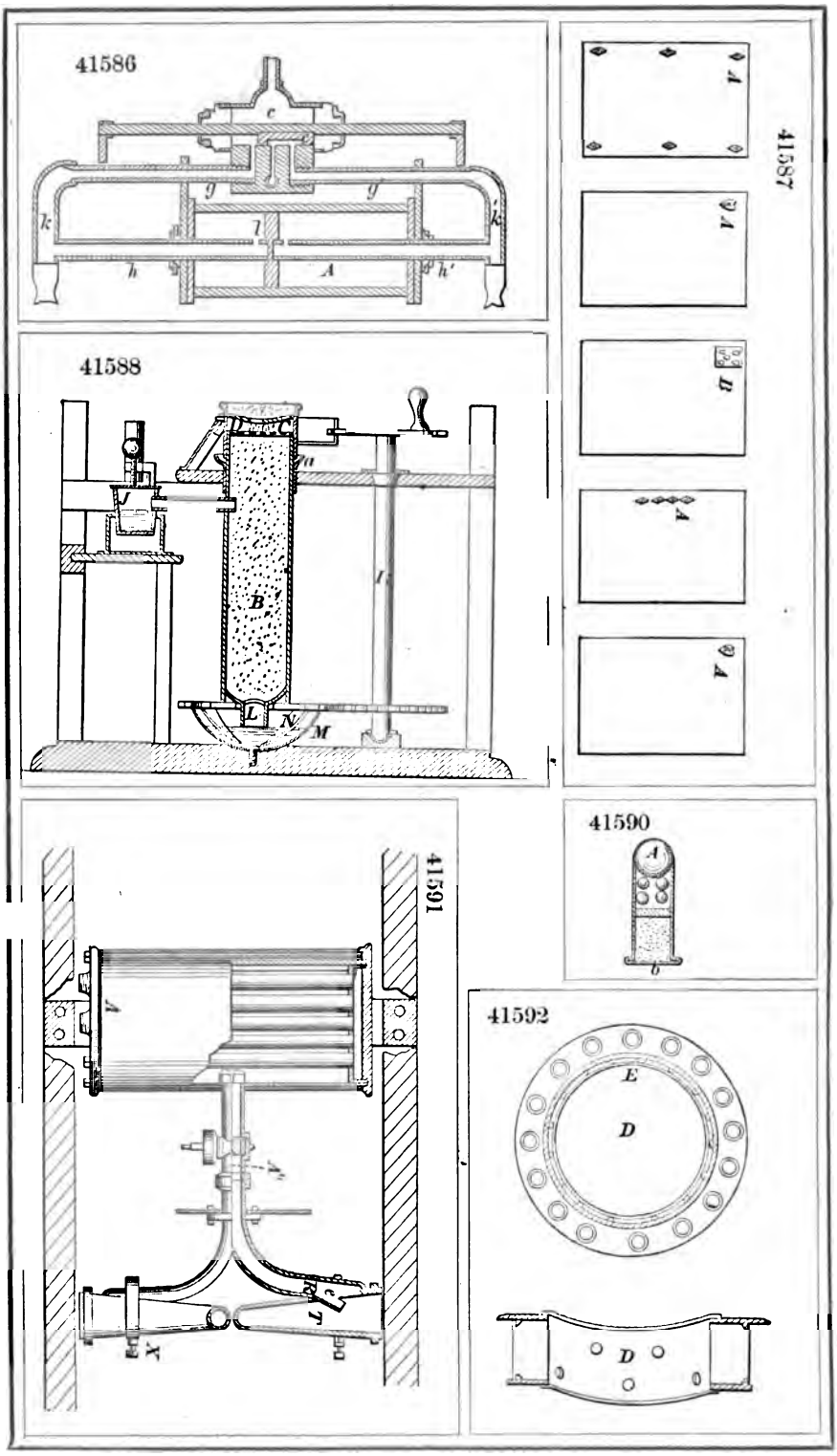
41586
41587
41588
41590
41591
41592

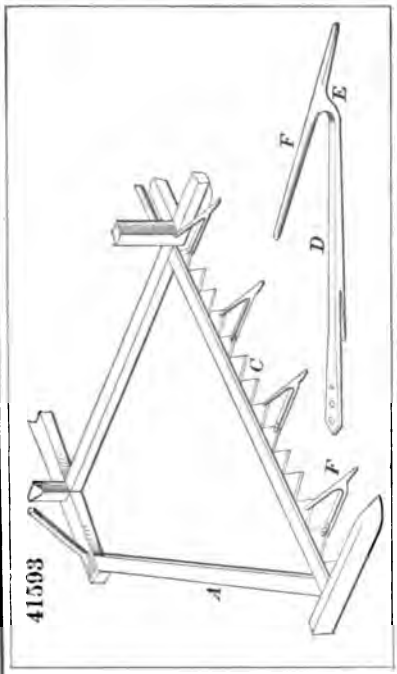
41593
A
C
D
E
F

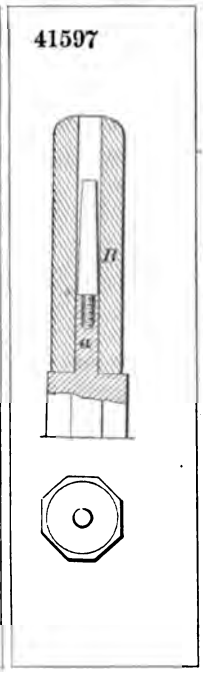
41597
H
a

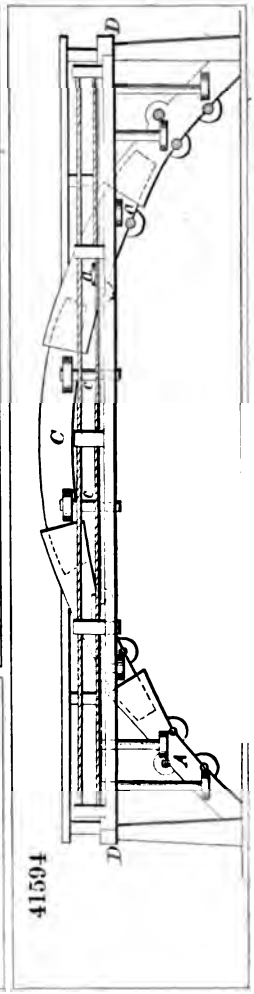
41594
D
C
A

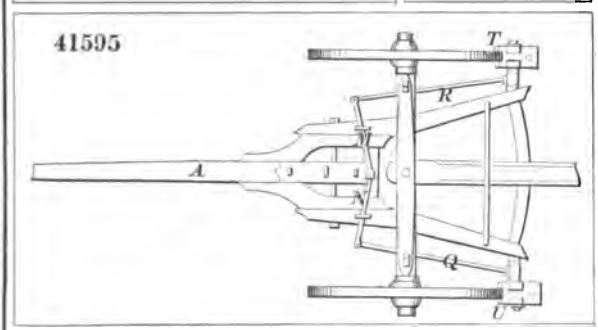
41595
A
T
R
M
N
Q
U

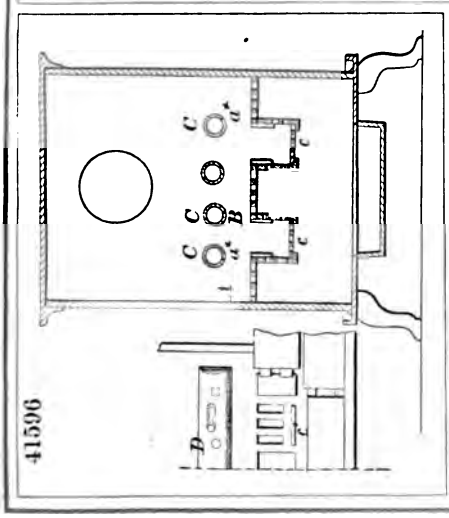
41596
C
B
c
D

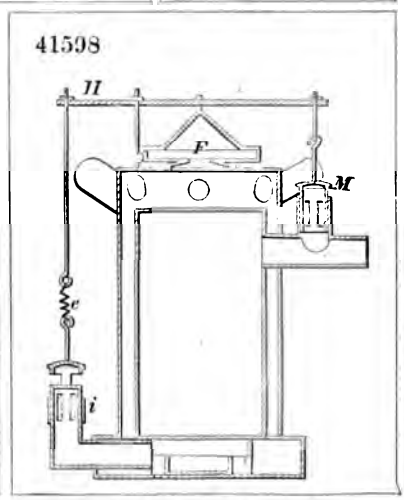
41598
H
F
M
e
i

41599

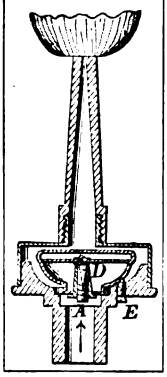

41602

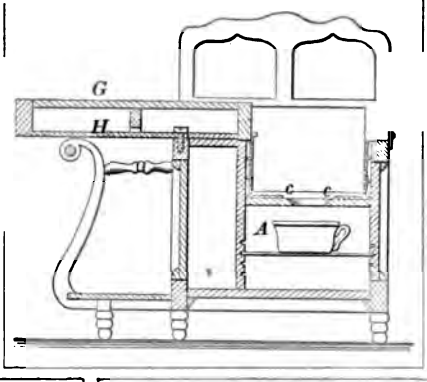

41600

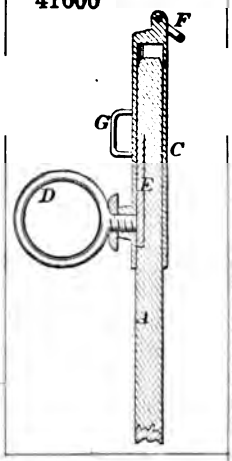

41601

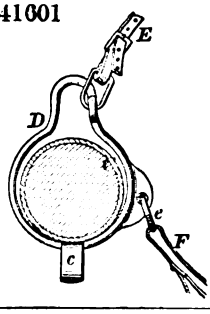

41603

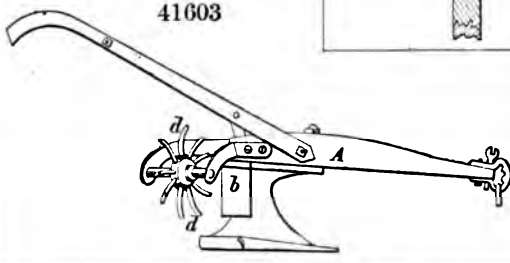

41604

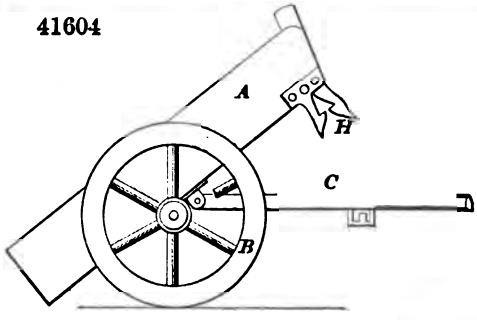

41606

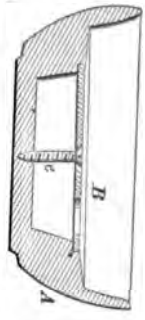

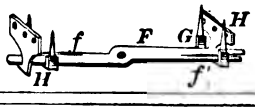

41605

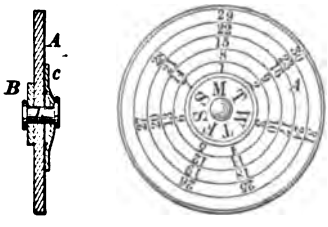

41607

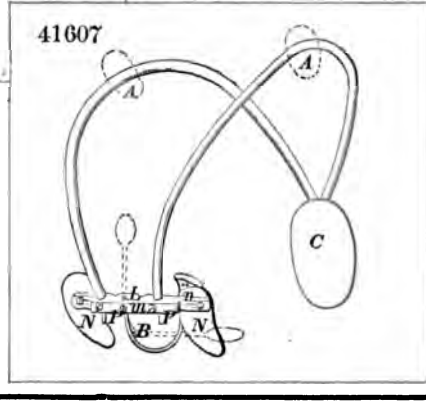

41608

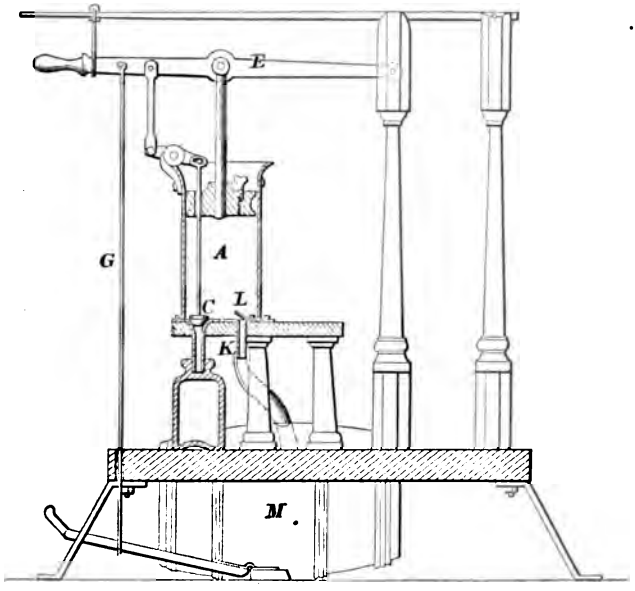

41609

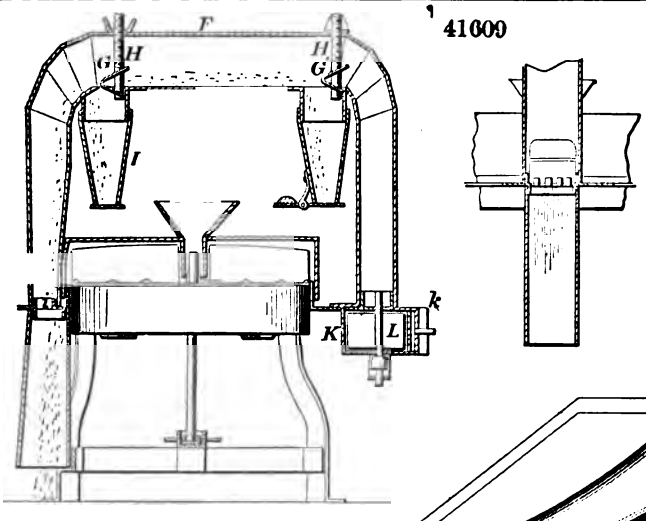

41610

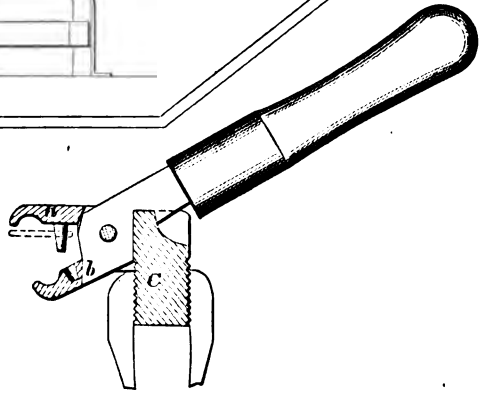

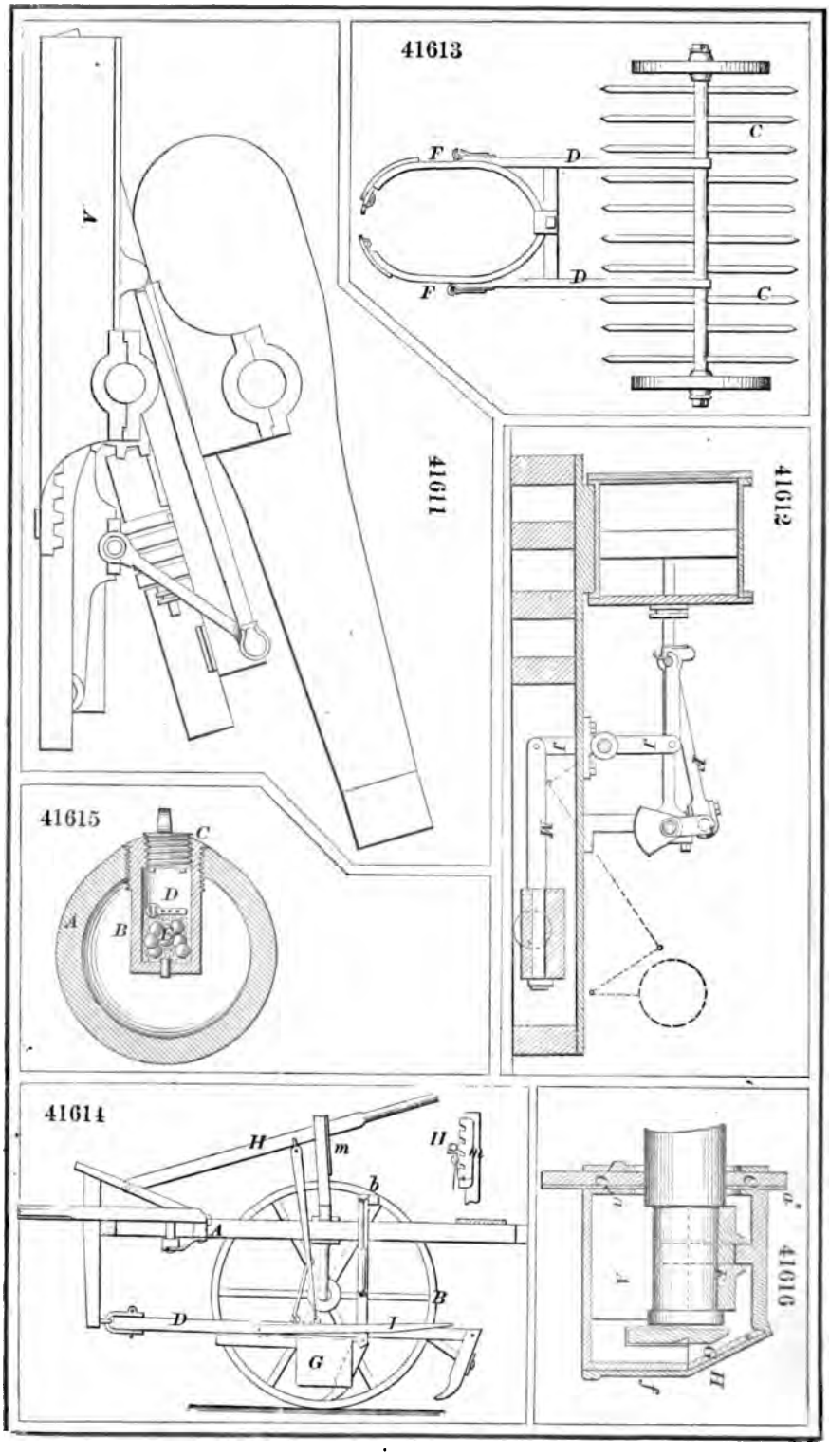
41611
41612
41613
41614
41615
41616
V
C
D
F
A
B
E
H
m
b
G
J
M
a

41617

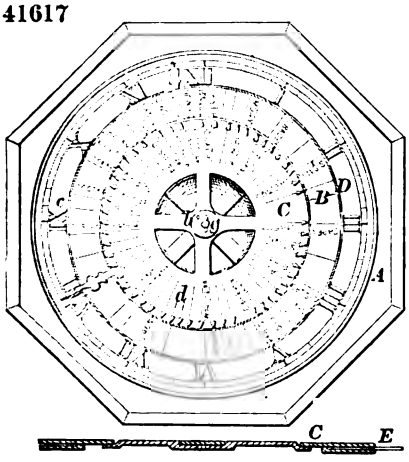

41620

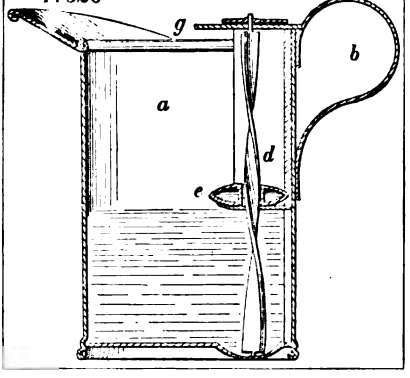

41621

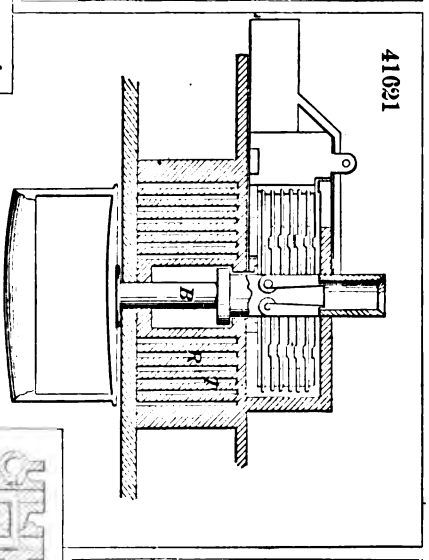

41618

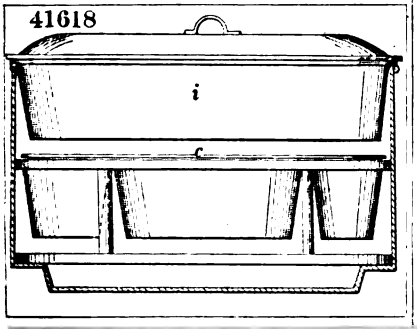

41619

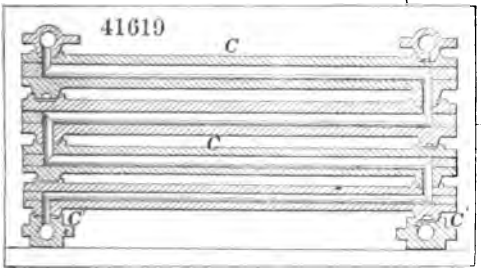

41622

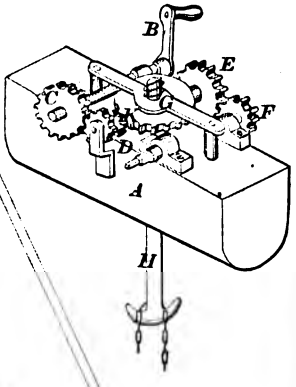

41623

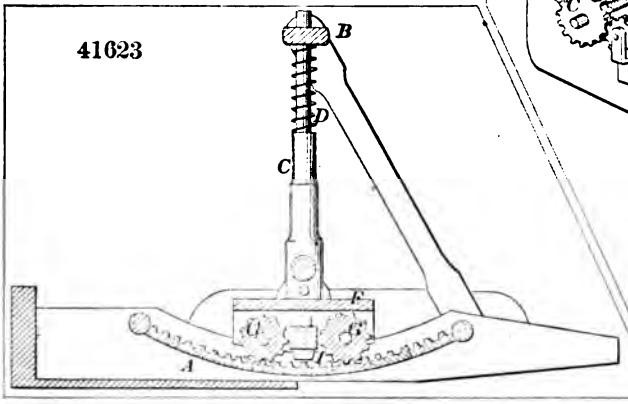

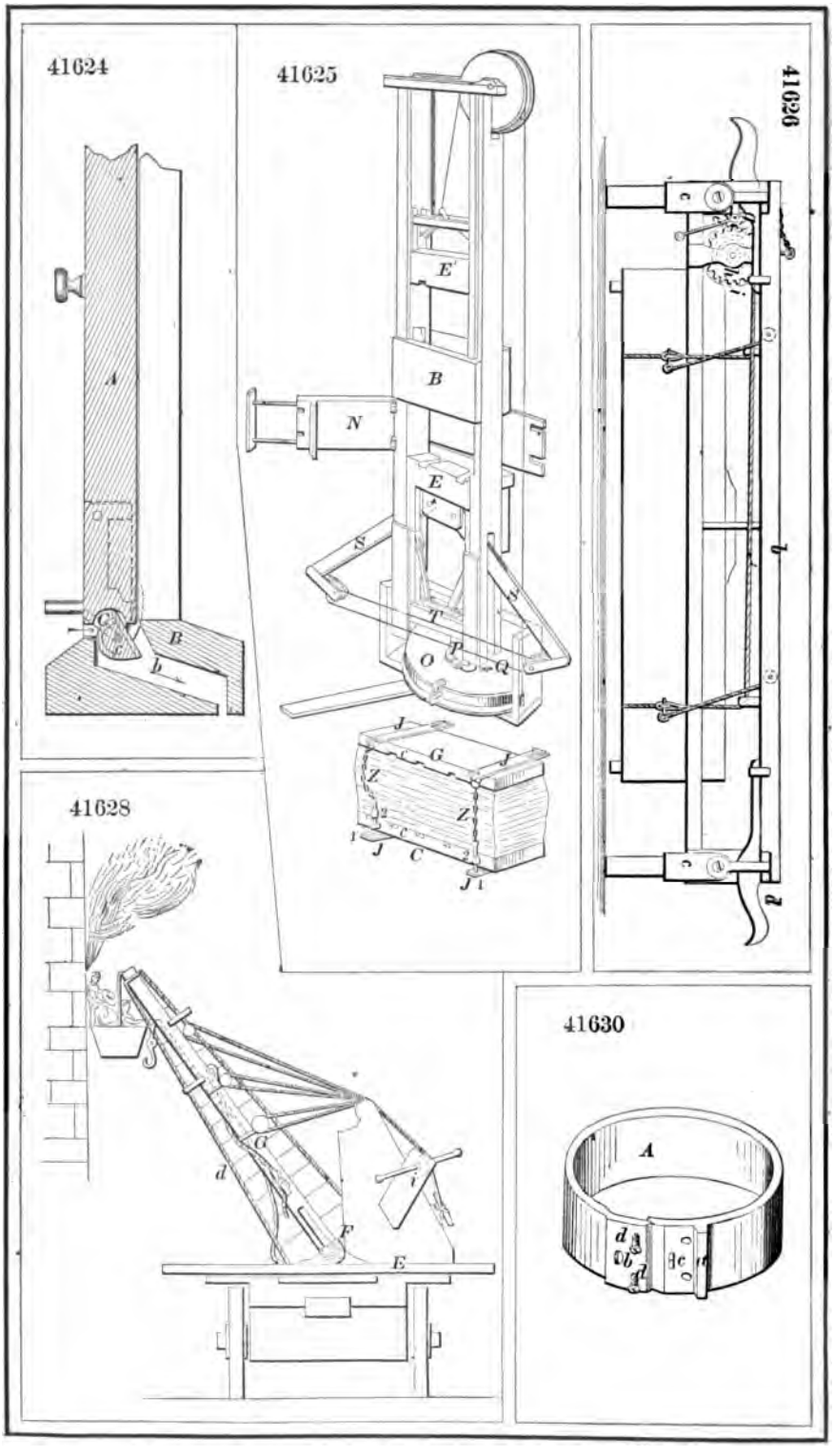
41624
41625
41626
41628
41630

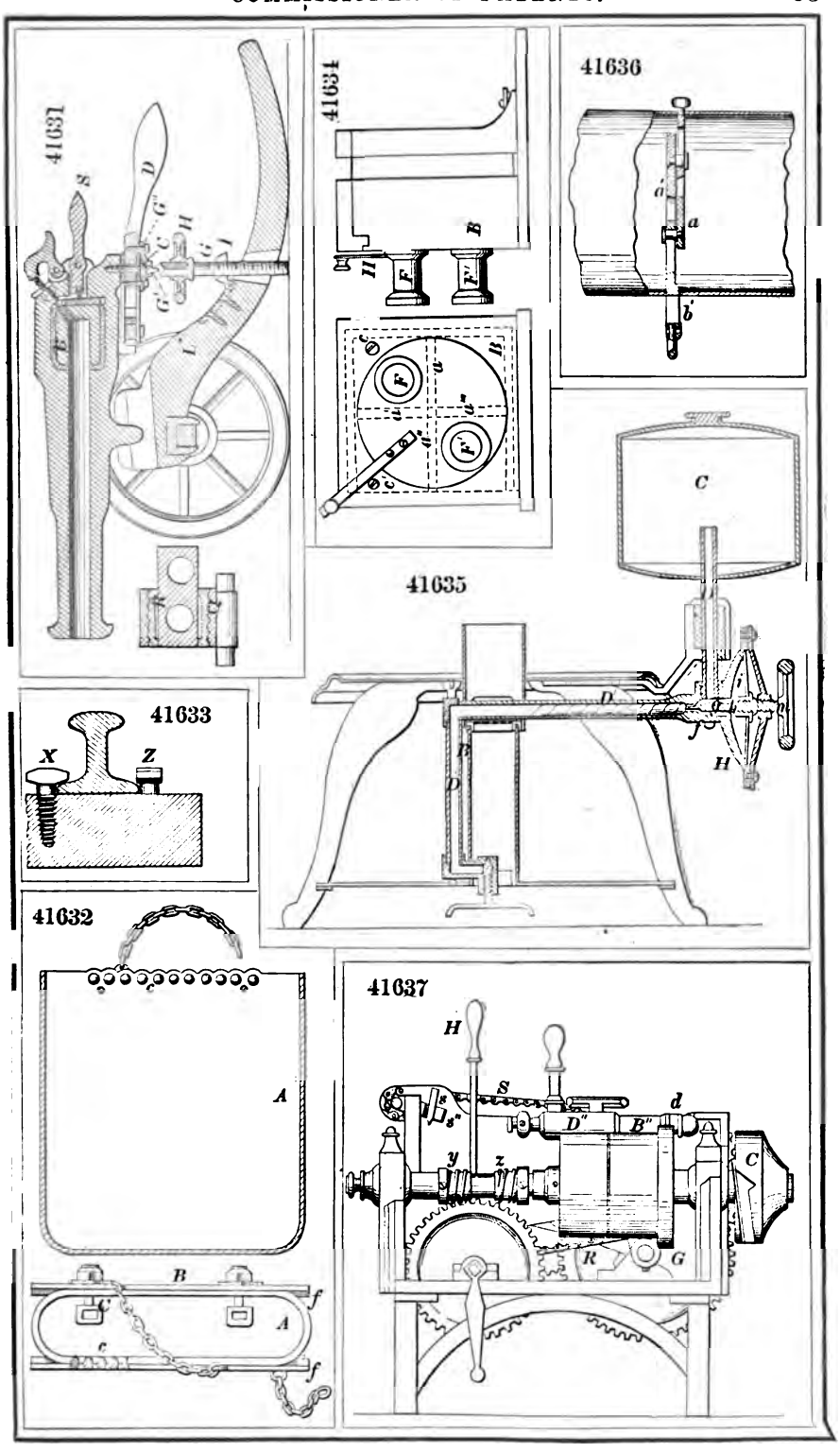
41631
41634
41636
41635
41633
41632
41637

41638

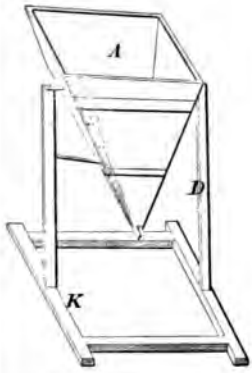

41639

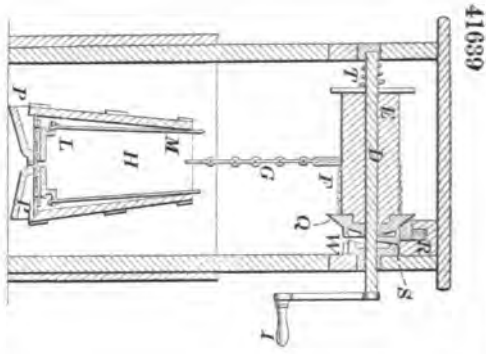

41640

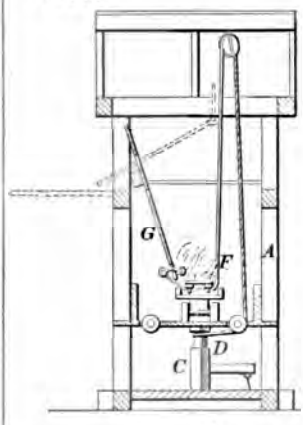

41641

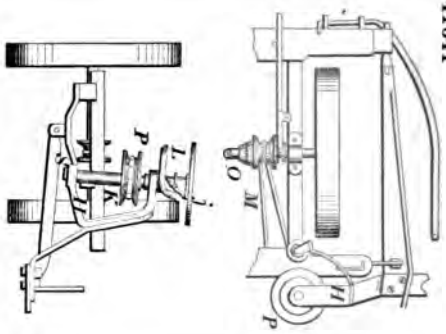

41643

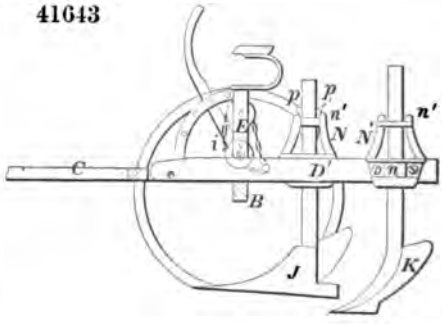

41644

41645

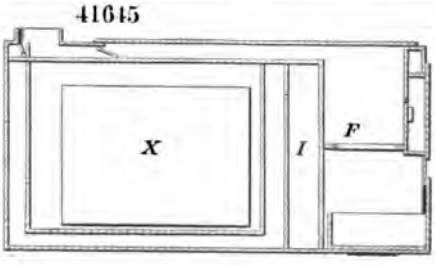

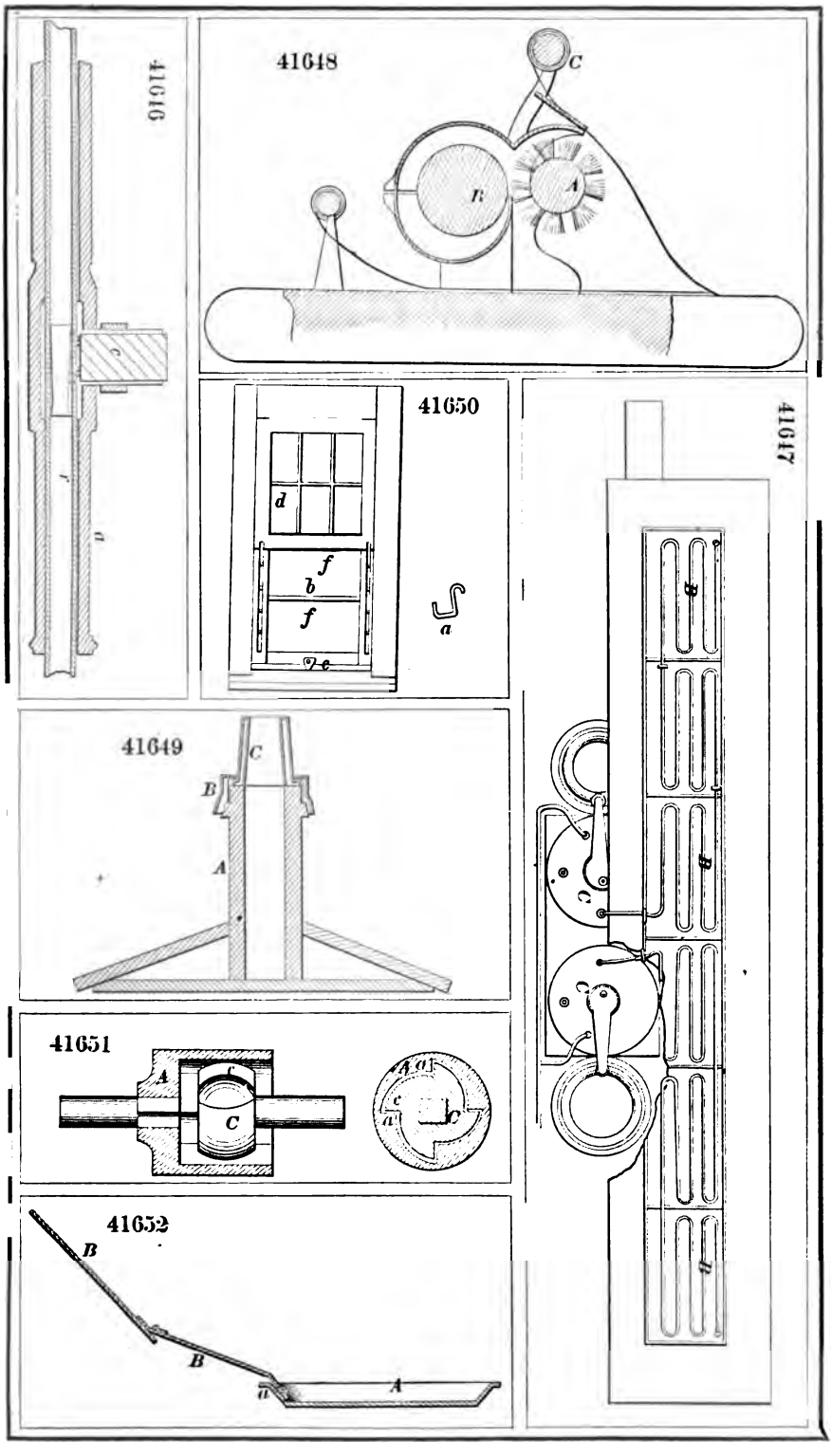
41616
41648
C
B
A
41650
d
f
b
f
a
c
41617
a
a
C
C
41649
C
B
A
41651
A
C
A
C
a
c
41652
B
B
a
A

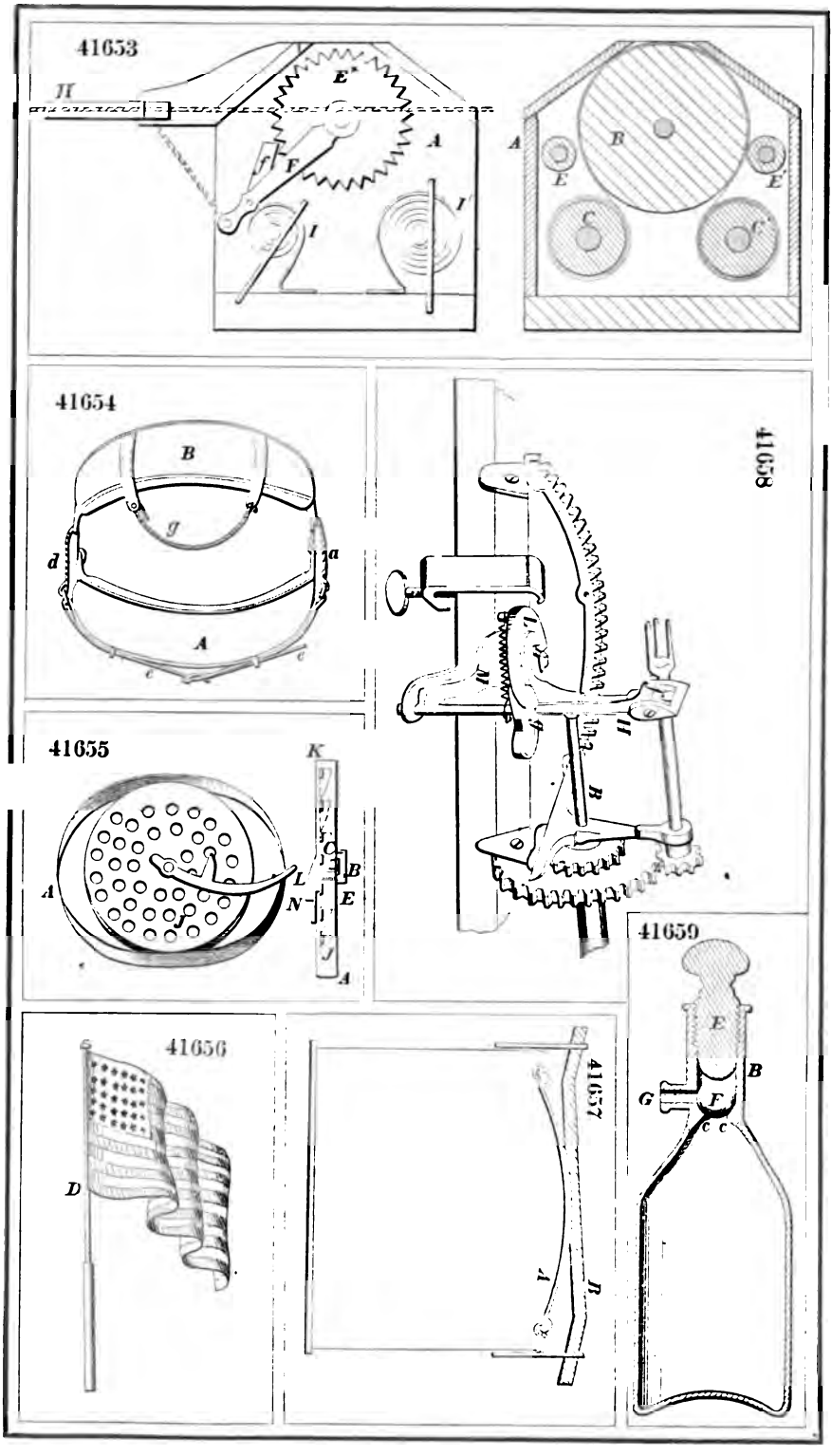
41653
41654
41655
41656
41657
41658
41659

41660

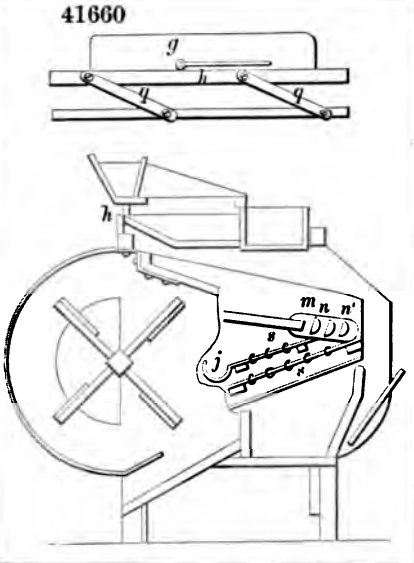

41664

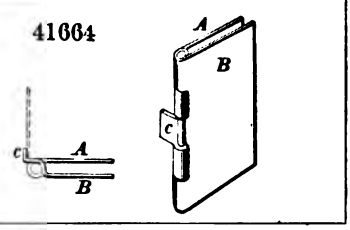

41665

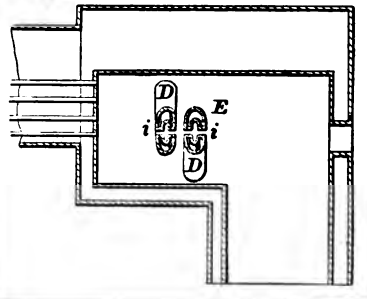

41662

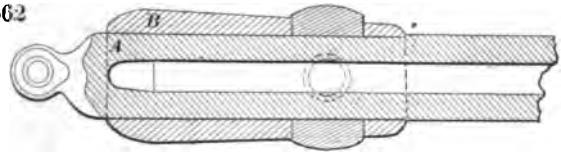

41661

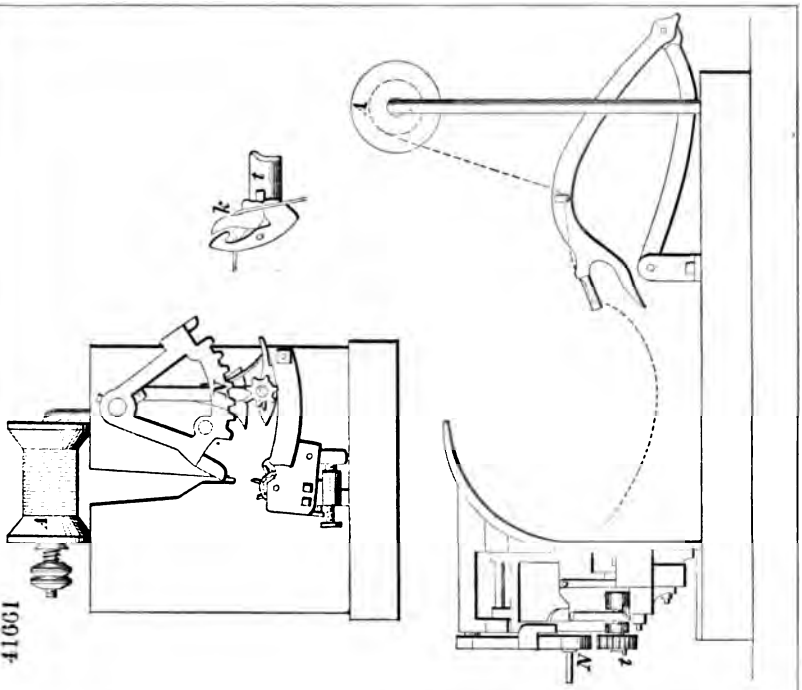

41667

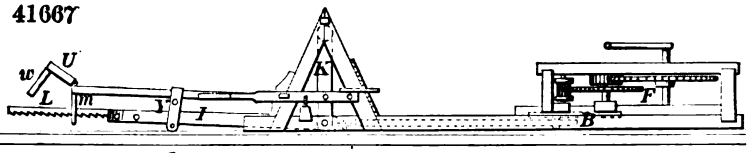

41669

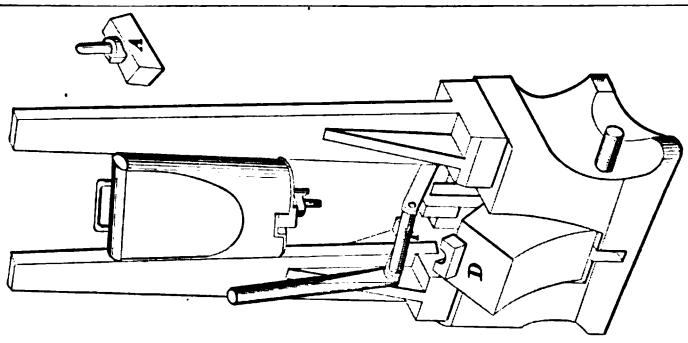

41668

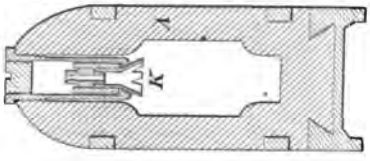

41670

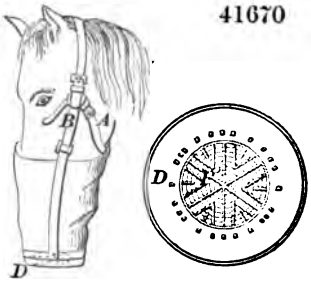

41671

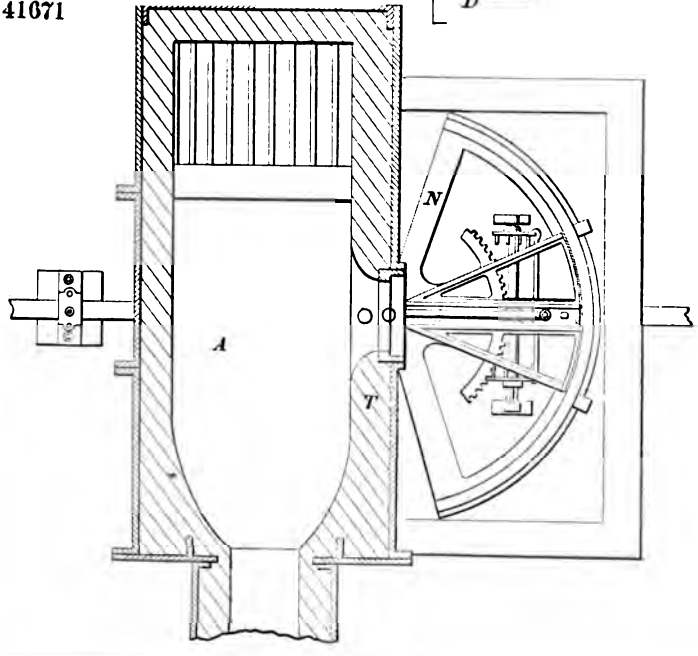

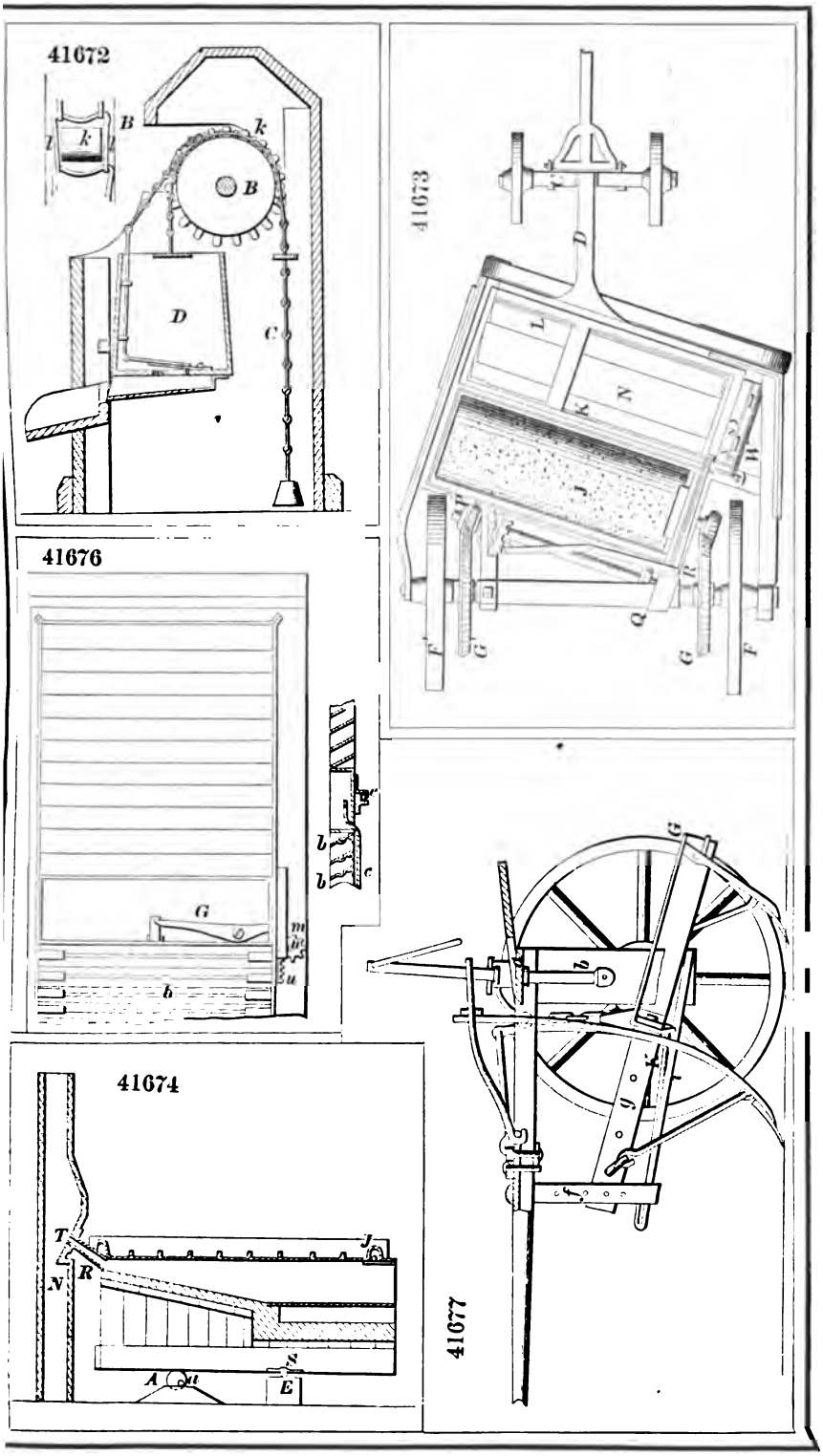
41672
41673
41676
41674
41677

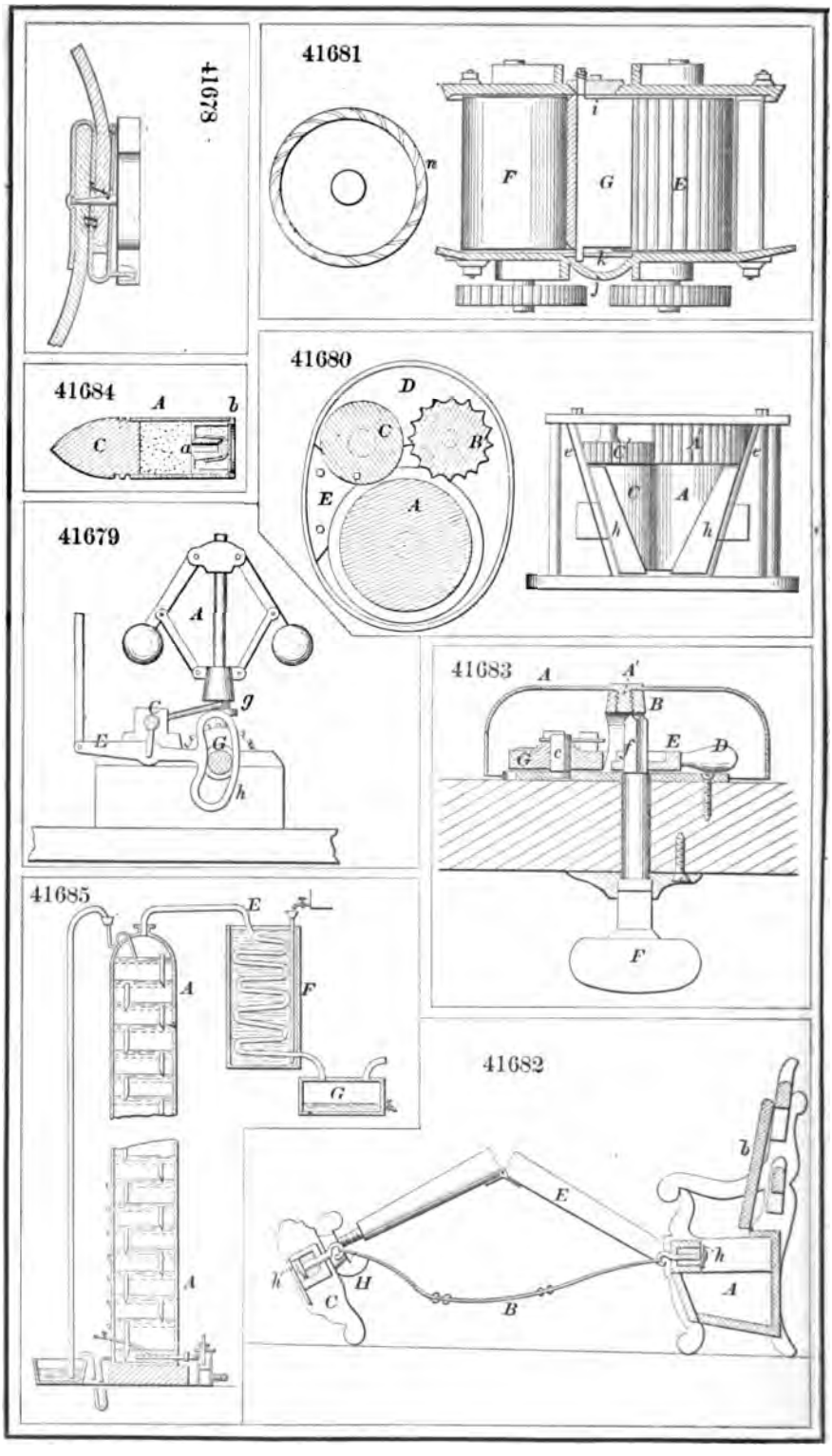
41678
41681
41680
41684
41679
41683
41685
41682

41686

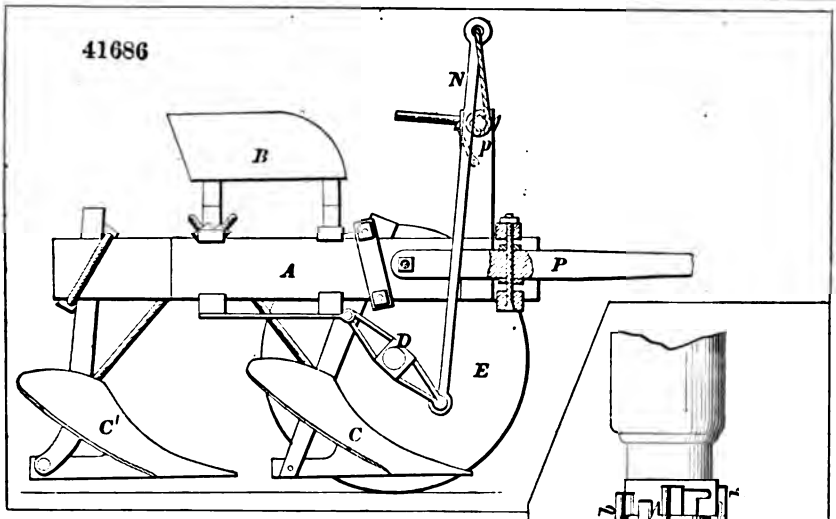

41688

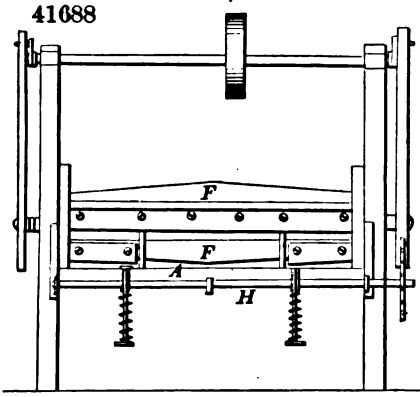

41689

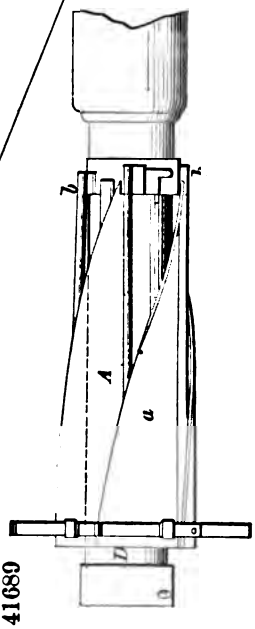

41690

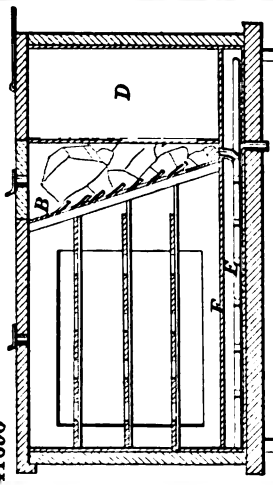

41691

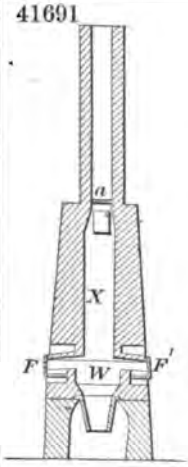

41692

41693

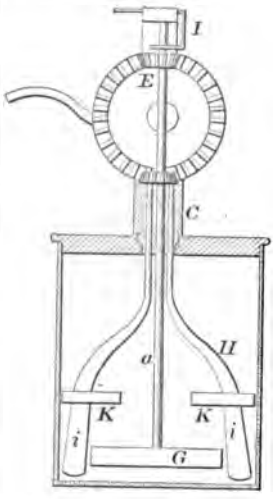

41694

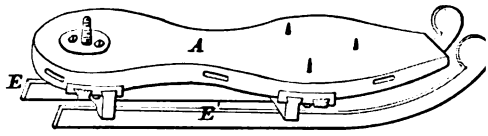

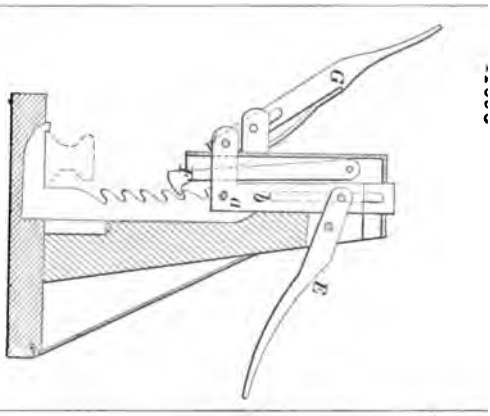

41695

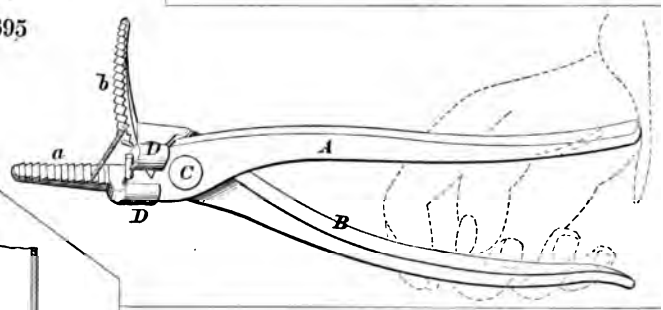

41697

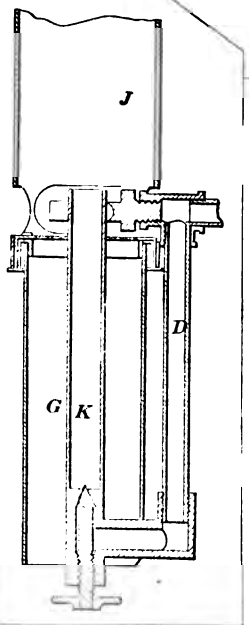

41698

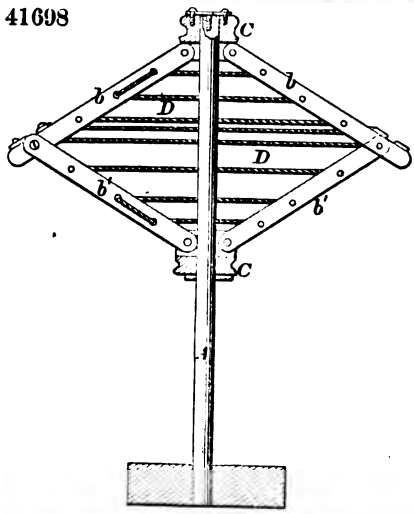

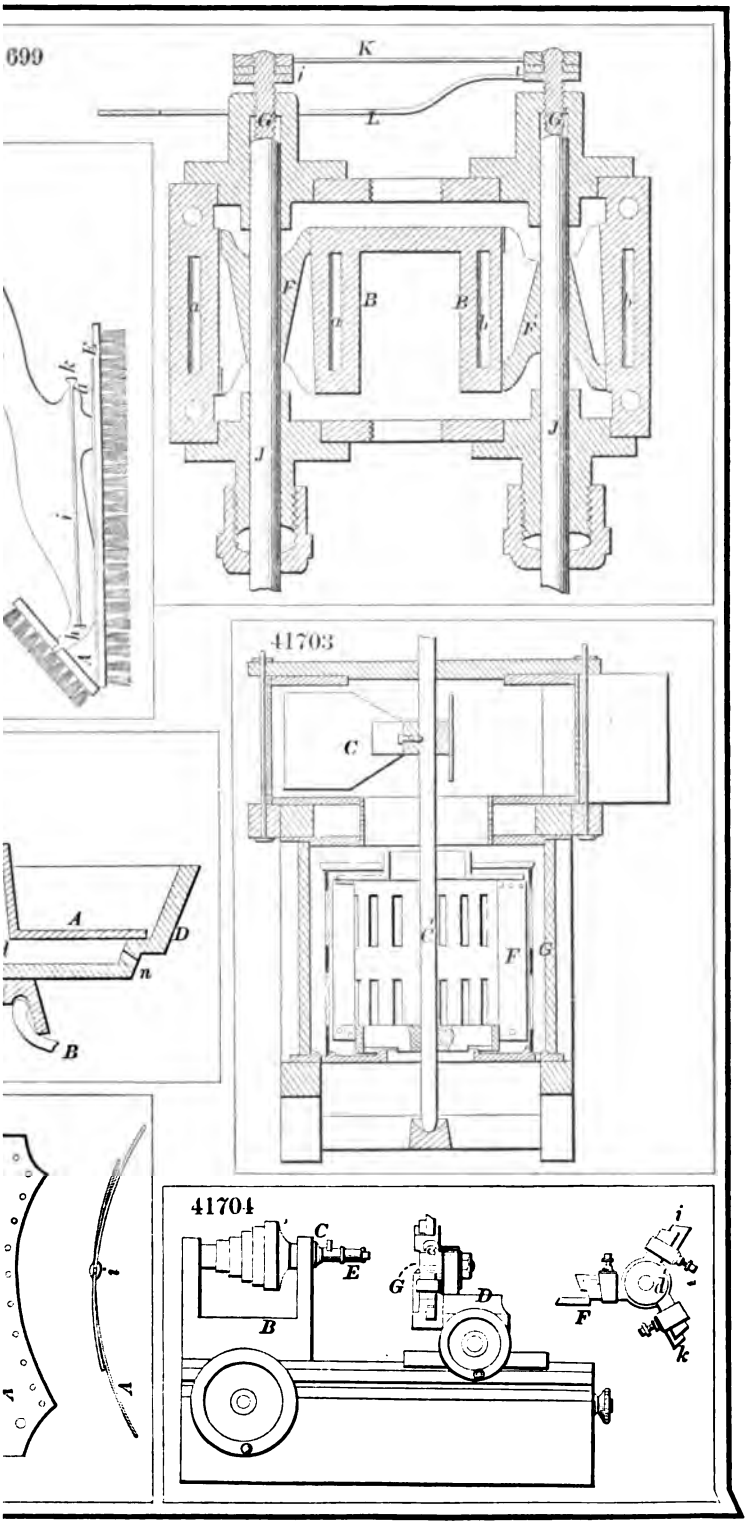
699
K
L
G
F
B
J
41703
C
F
G
A
D
n
B
41704
C
E
G
D
B
F
i
k

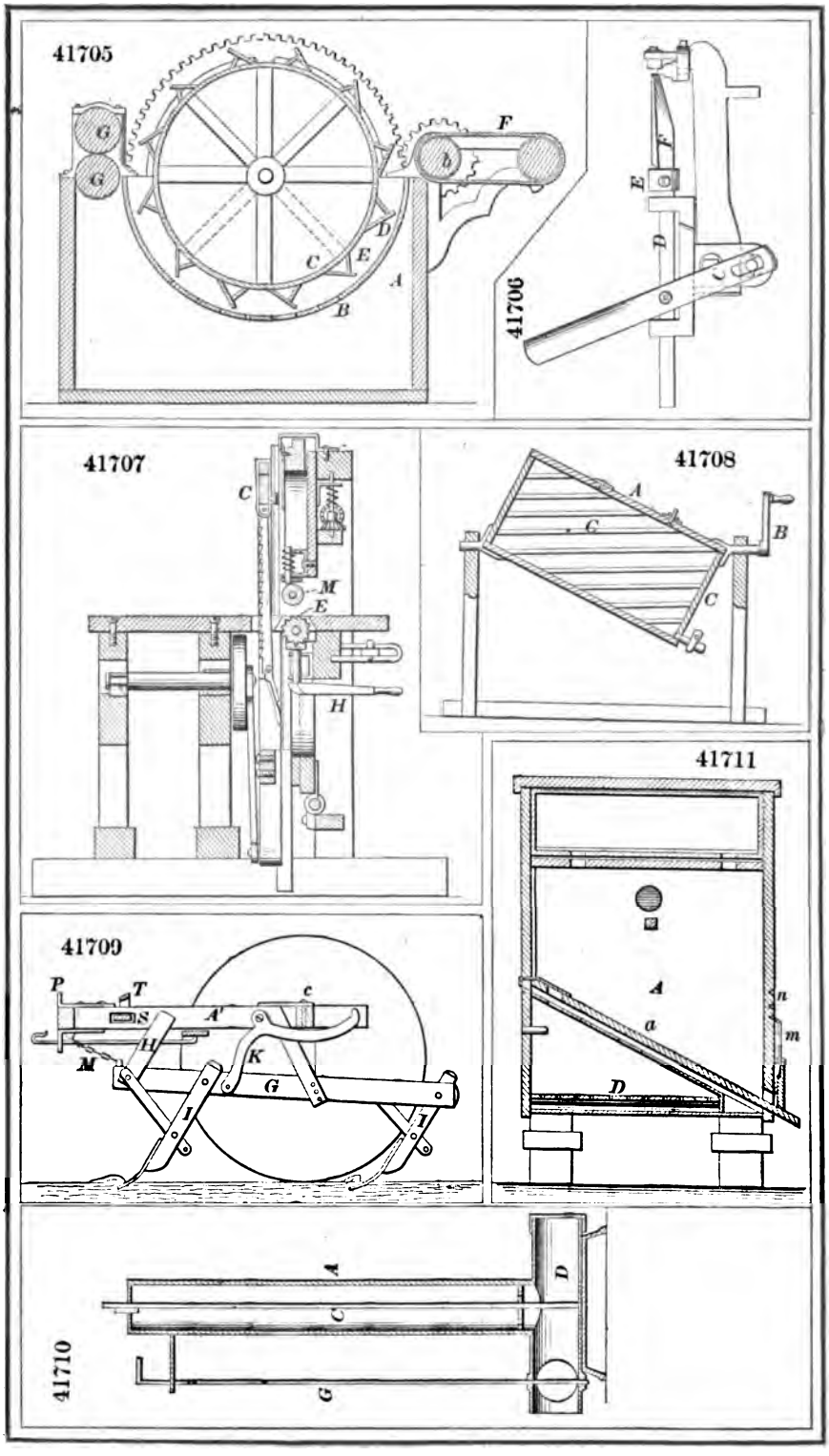
41705
G
G
F
b
D
E
C
A
B
41706
E
F
D
C
41707
C
M
E
H
41708
A
C
B
C
41709
P
T
S
A'
c
H
M
K
G
I
I
41711
A
a
n
m
D
41710
A
C
D
G

41712

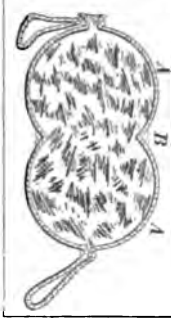

41715

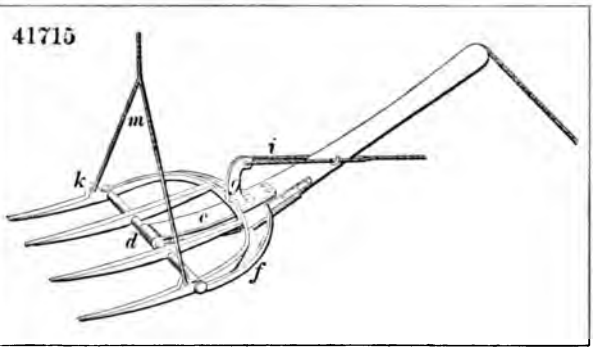

41713

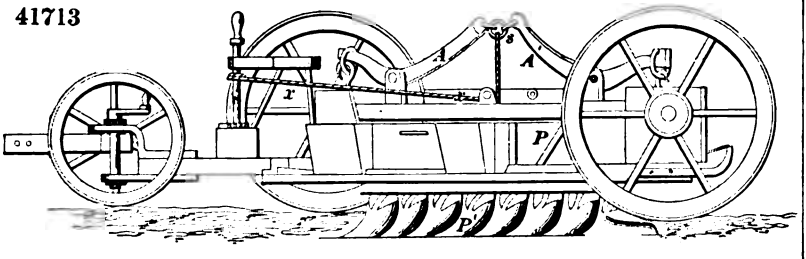

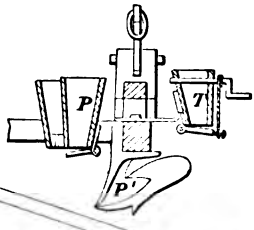

41714

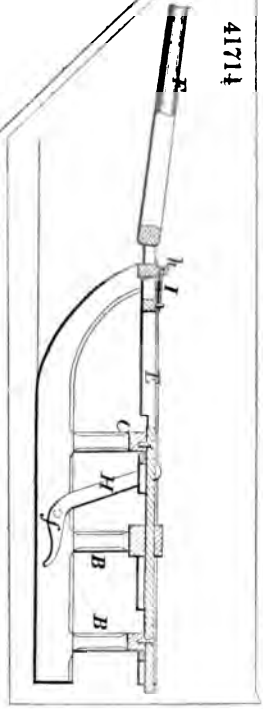

41716

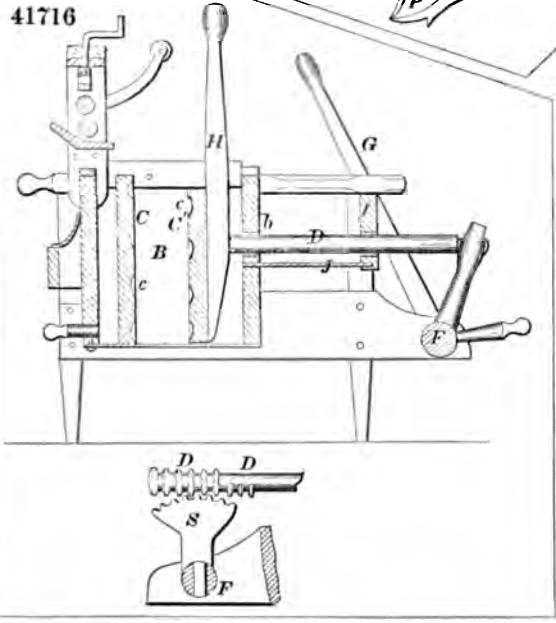

41719

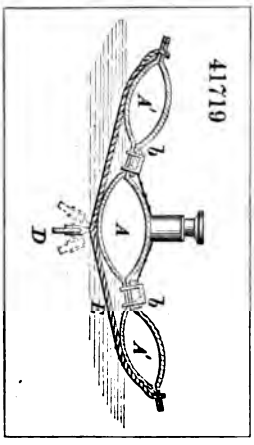

41717

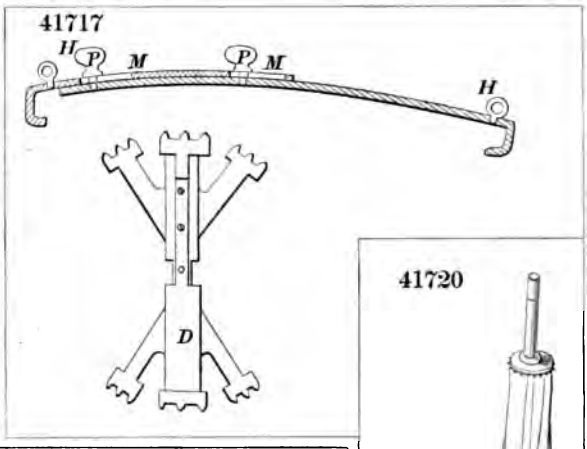

41720

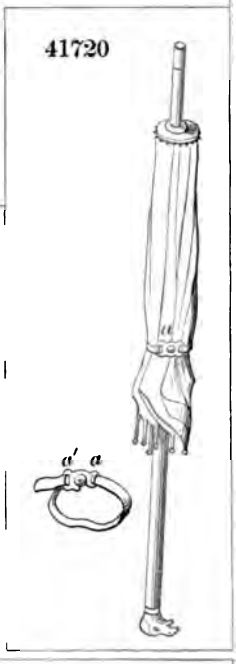

41721

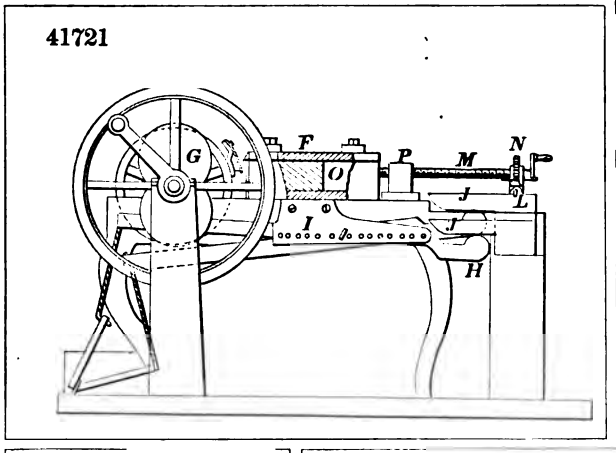

41718

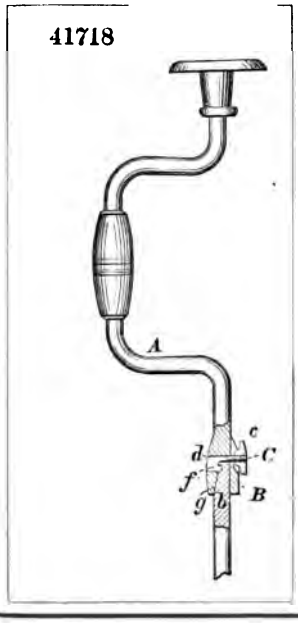

41722

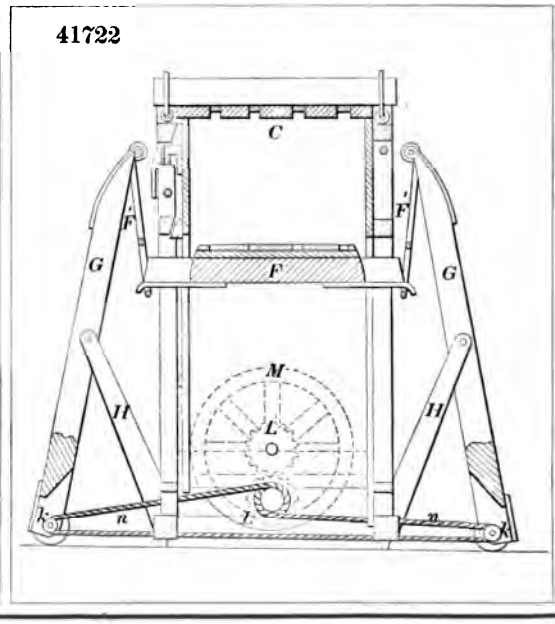

41723

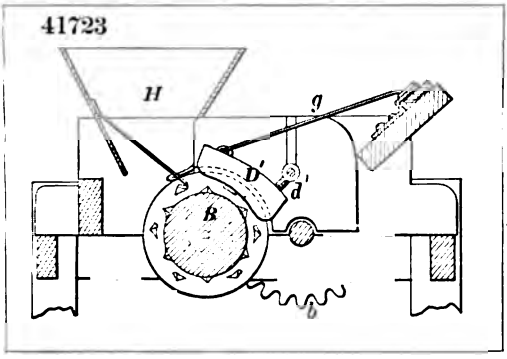

41725

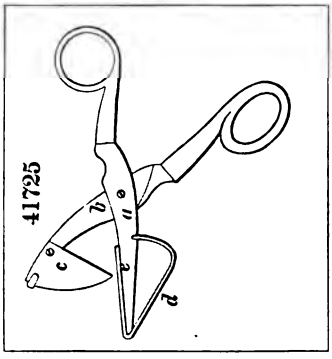

41726

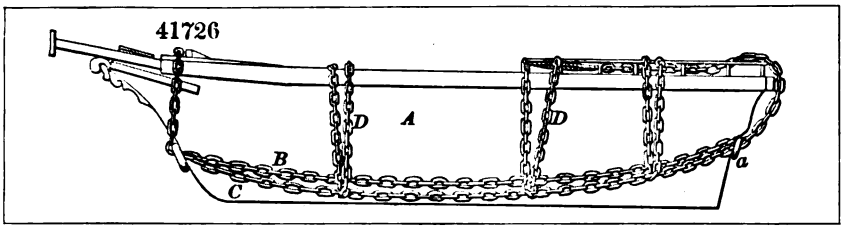

41727

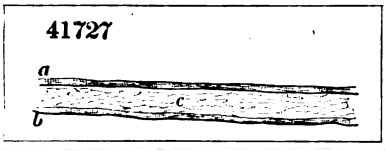

41728

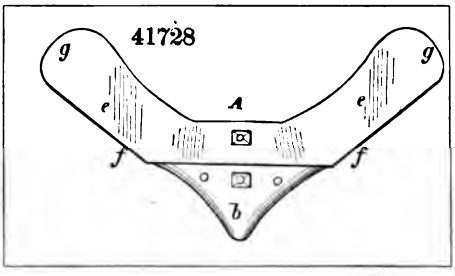

41730

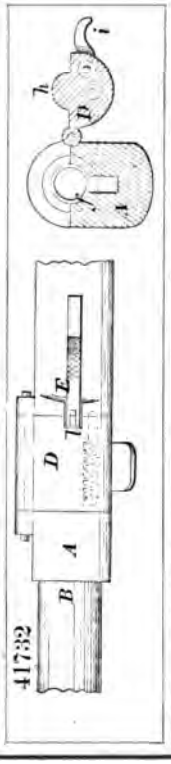

41732

41731

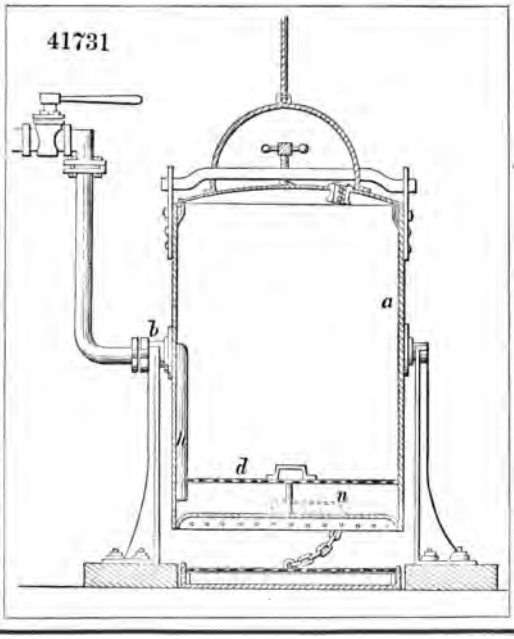

41733

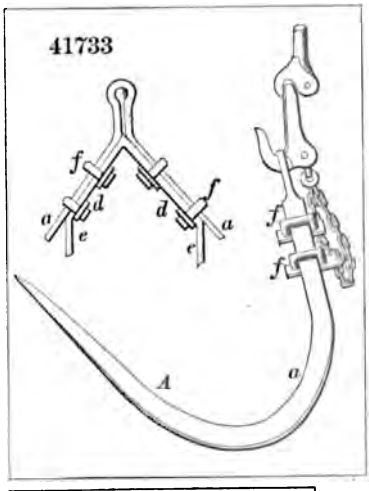

41734

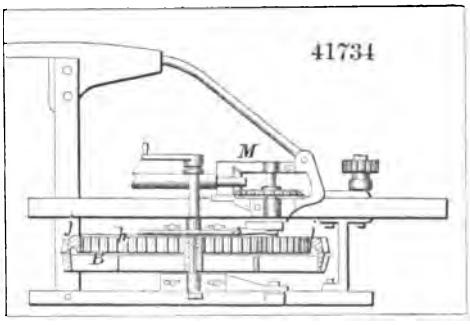

41736

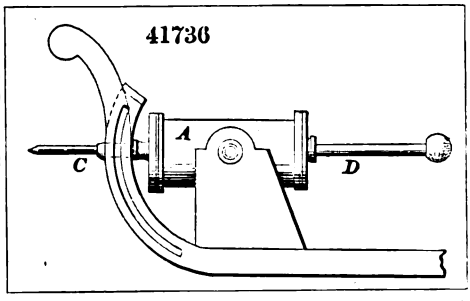

41735

41737

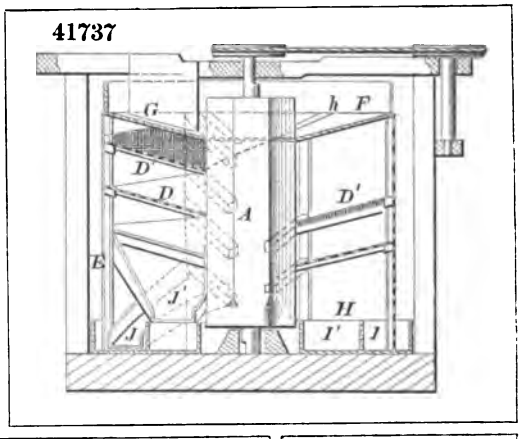

41738

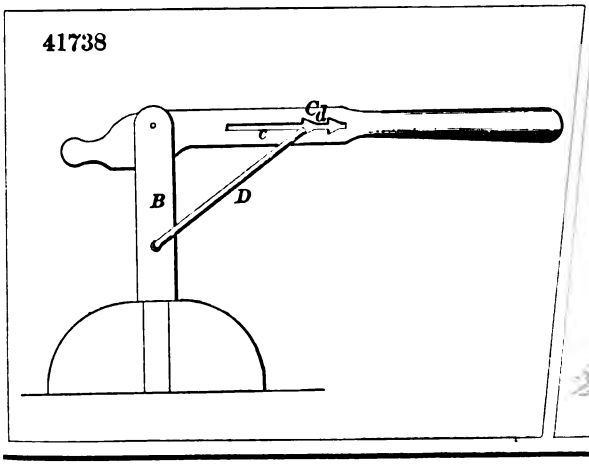

41739

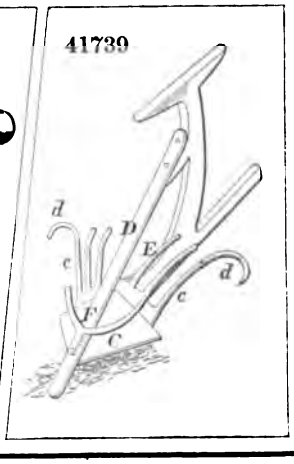

41740

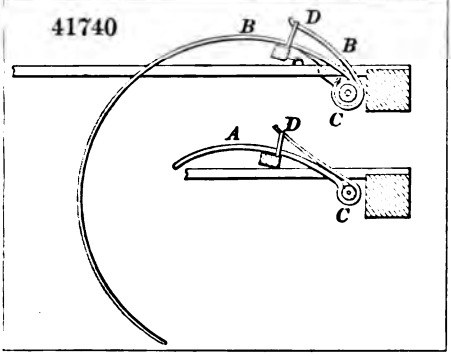

41742

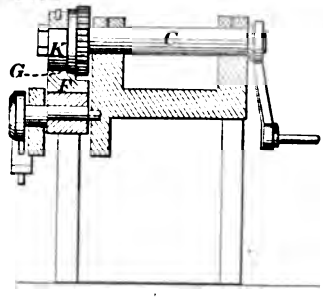

41741

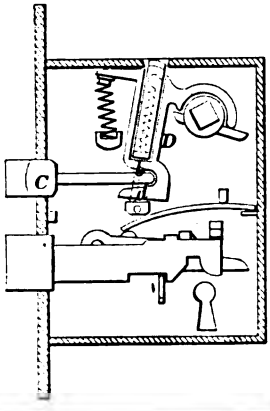

41743

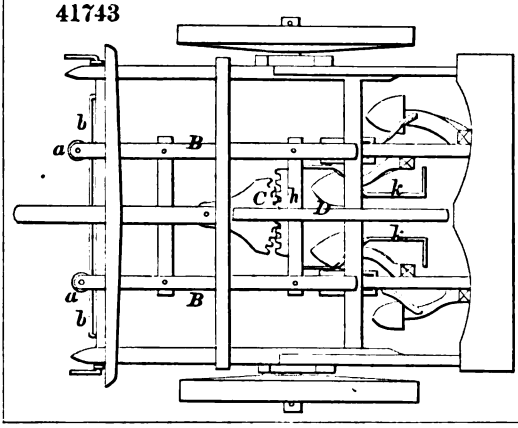

41745

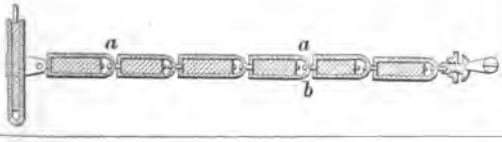

41744

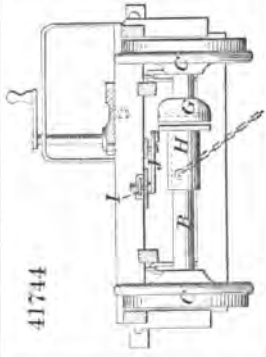

41746

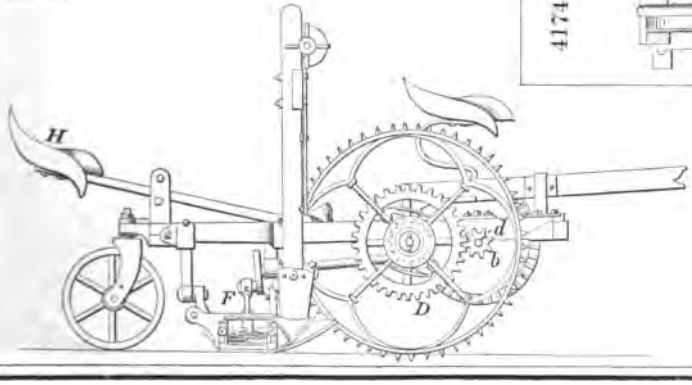

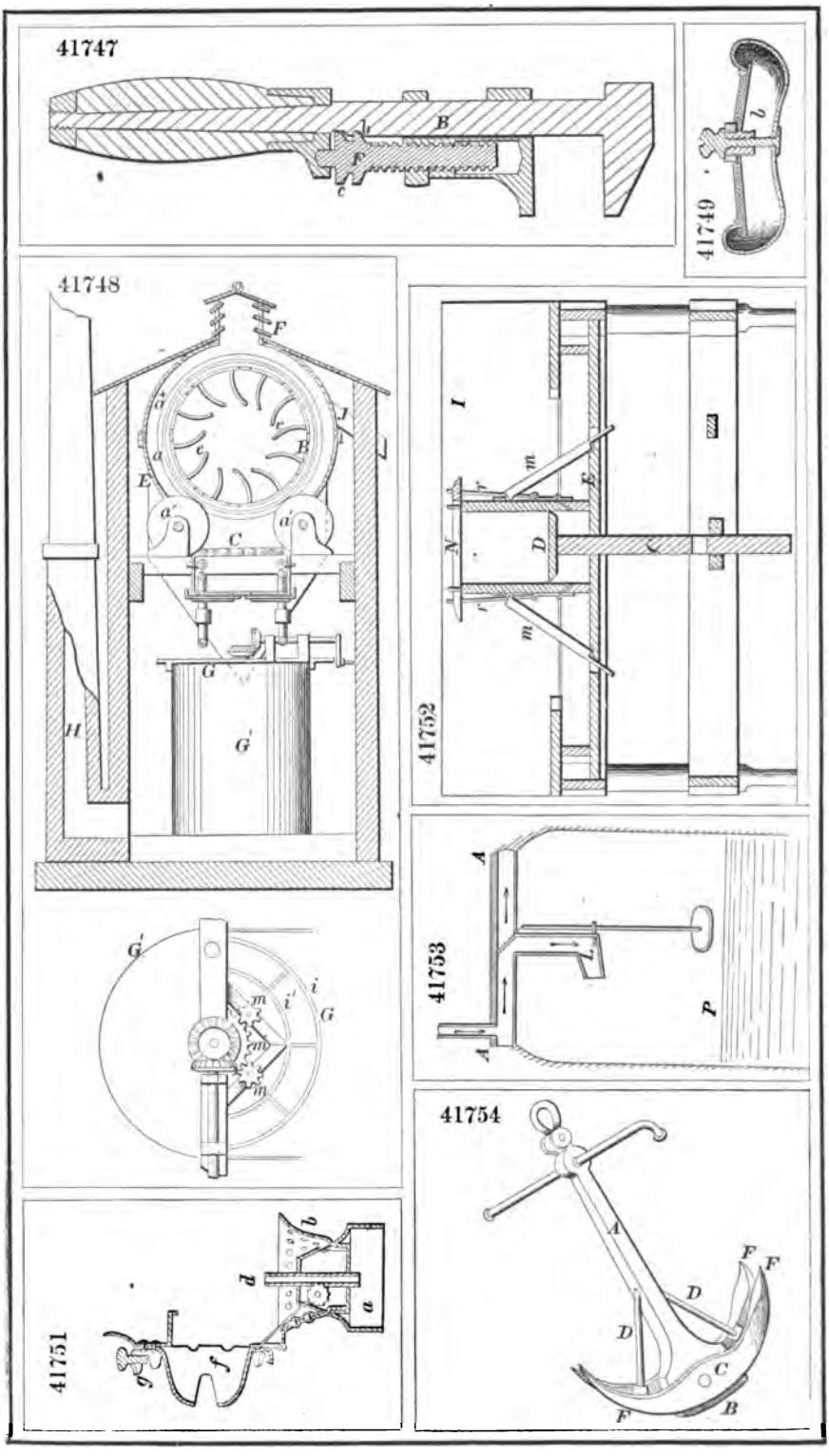
41747
41748
41749
41750
41751
41752
41753
41754

41755

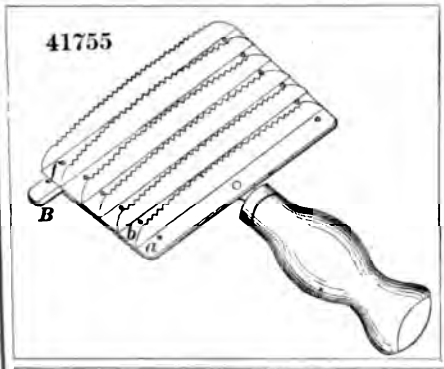

41760

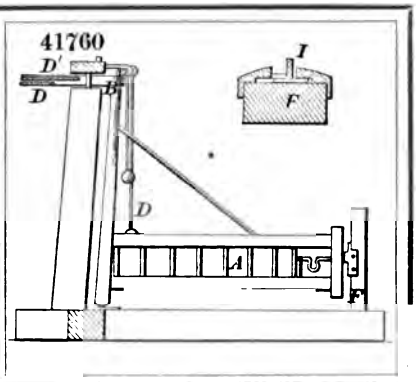

41758

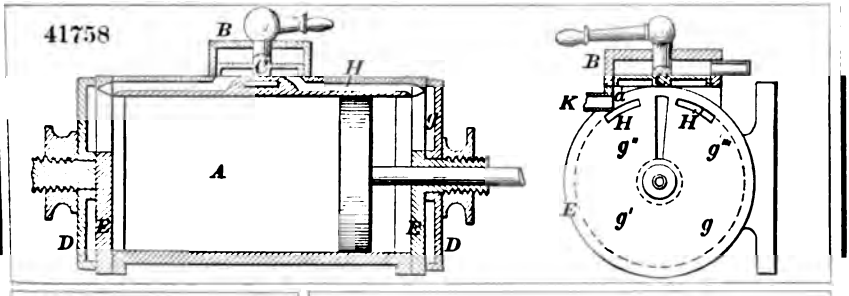

41756

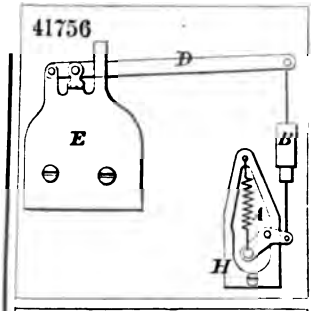

41759

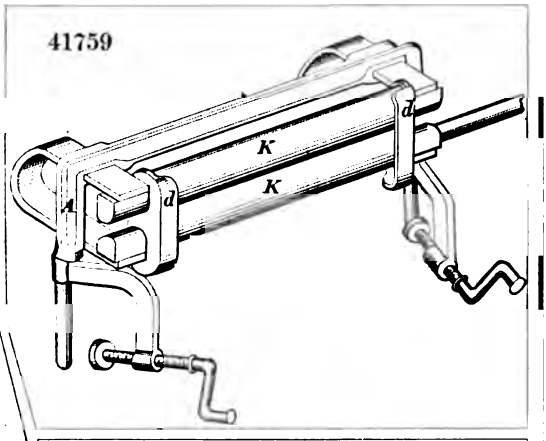

41757

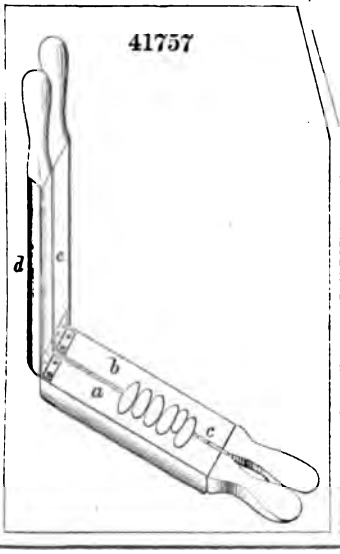

41761

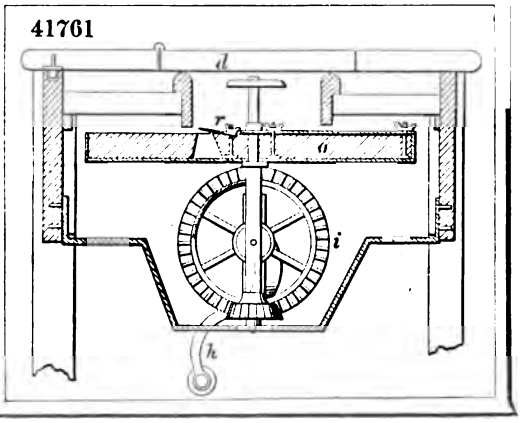

41762

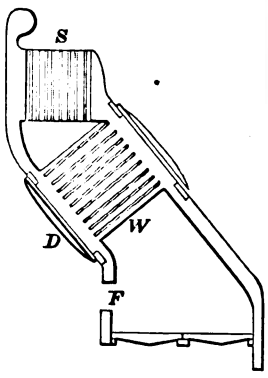

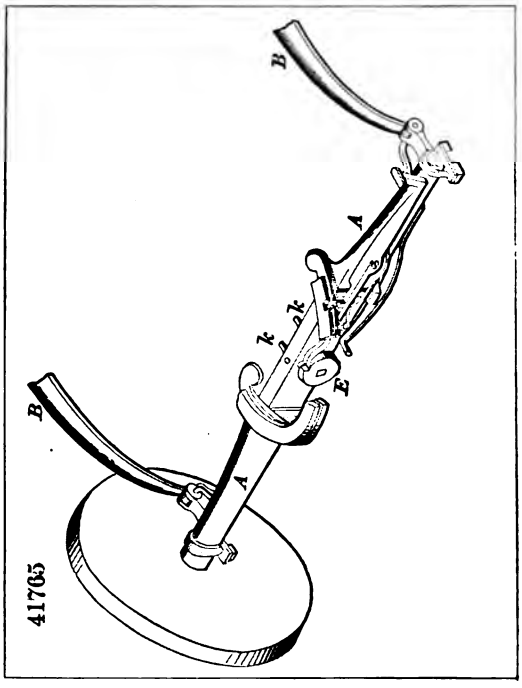

41765

41764

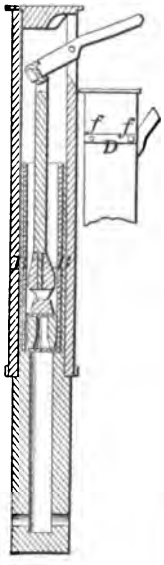

41763

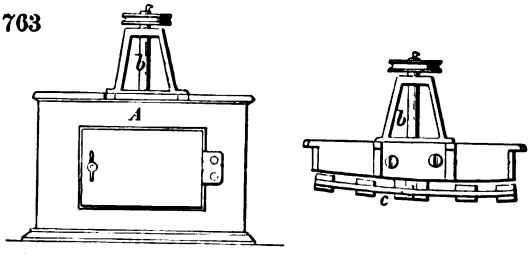

41767

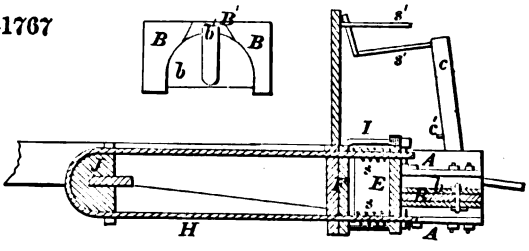

41766

41768

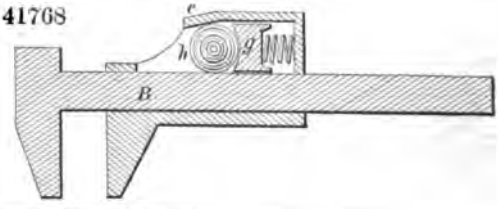

41769

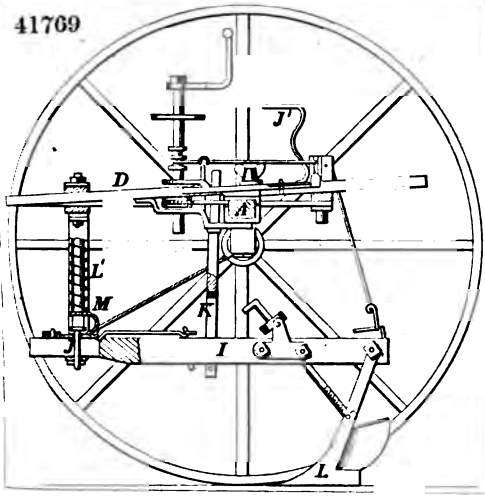

41770

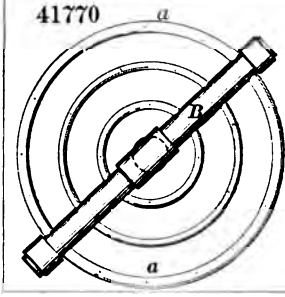

41774

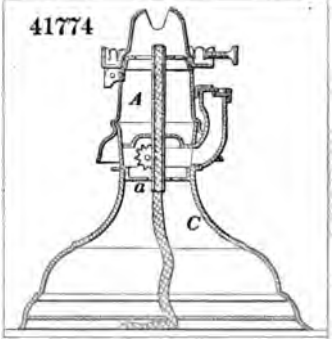

41771

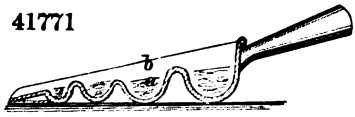

41772

41773

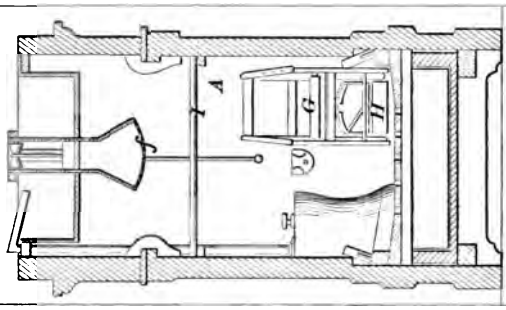

41777

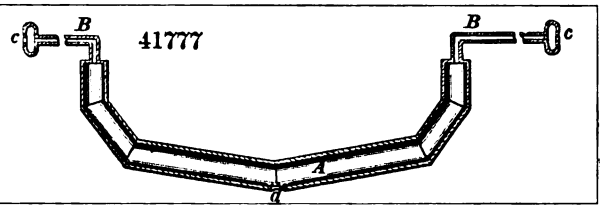

41775

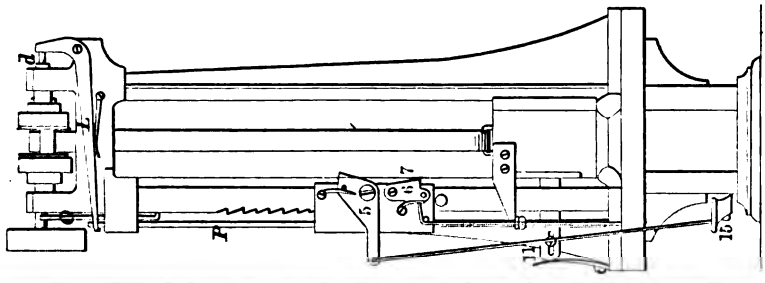

41778

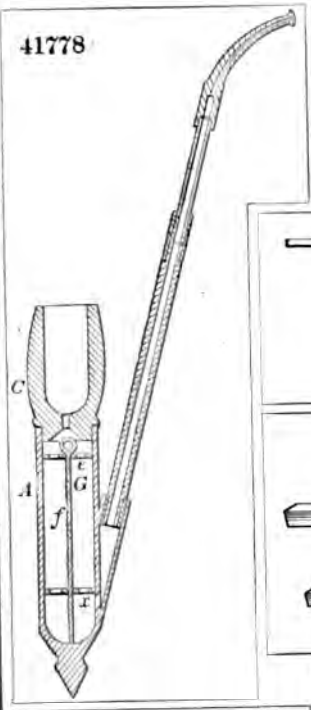

41781

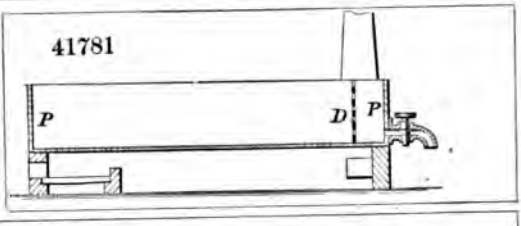

41780

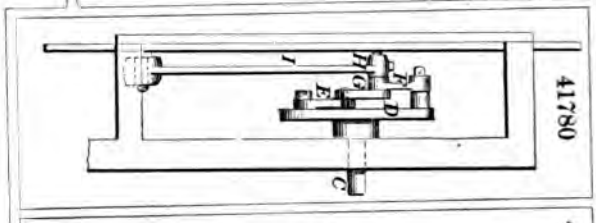

41784

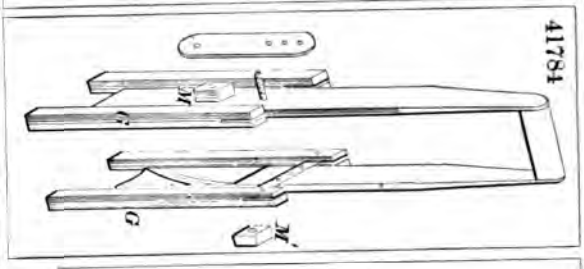

41783

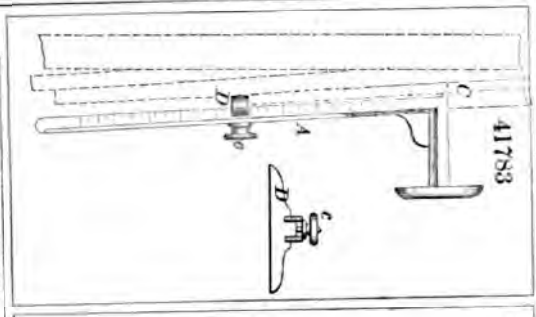

41782

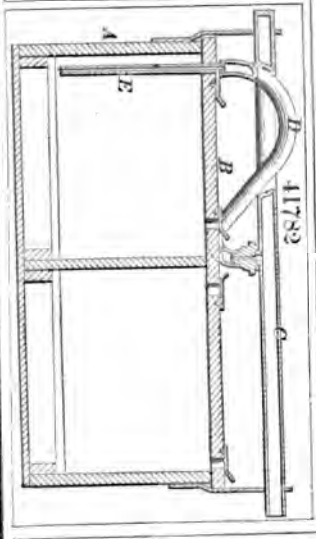

41779

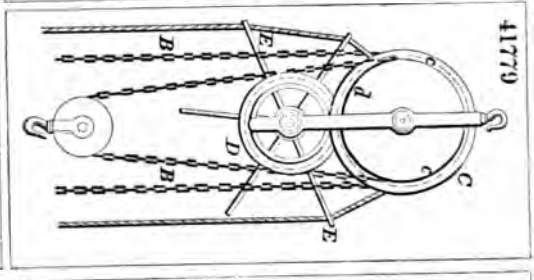

41785

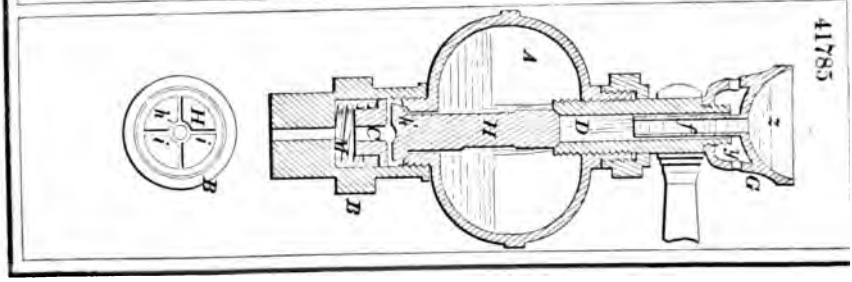

1786

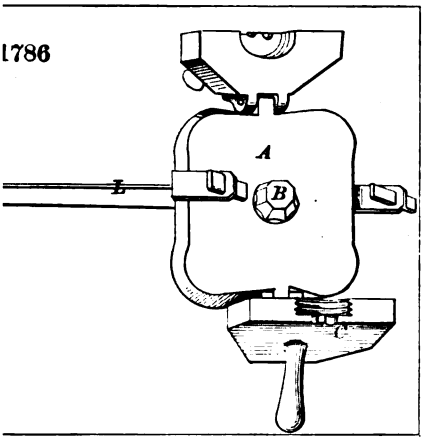

41788

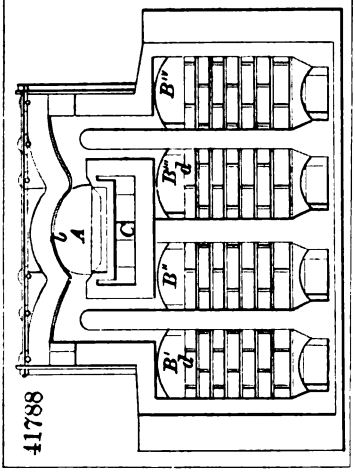

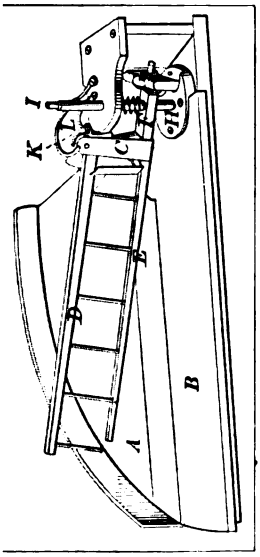

41789

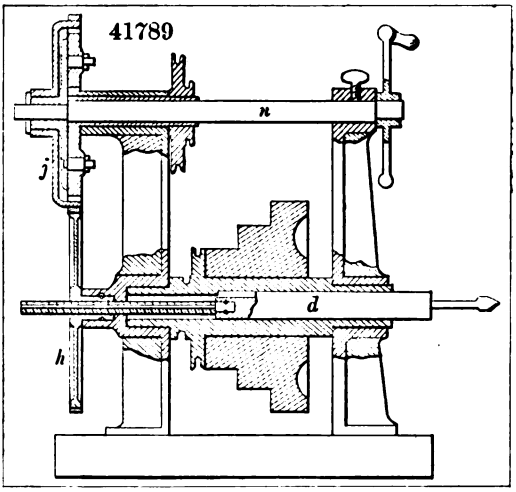

790

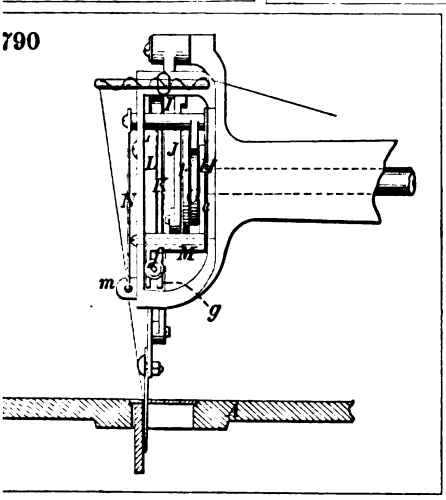

41792

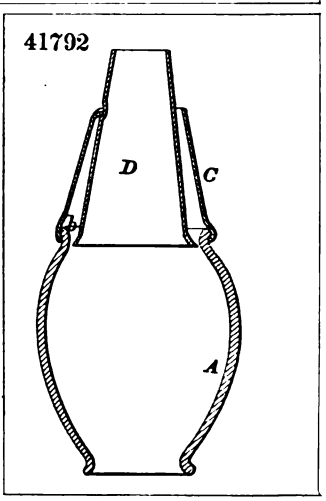

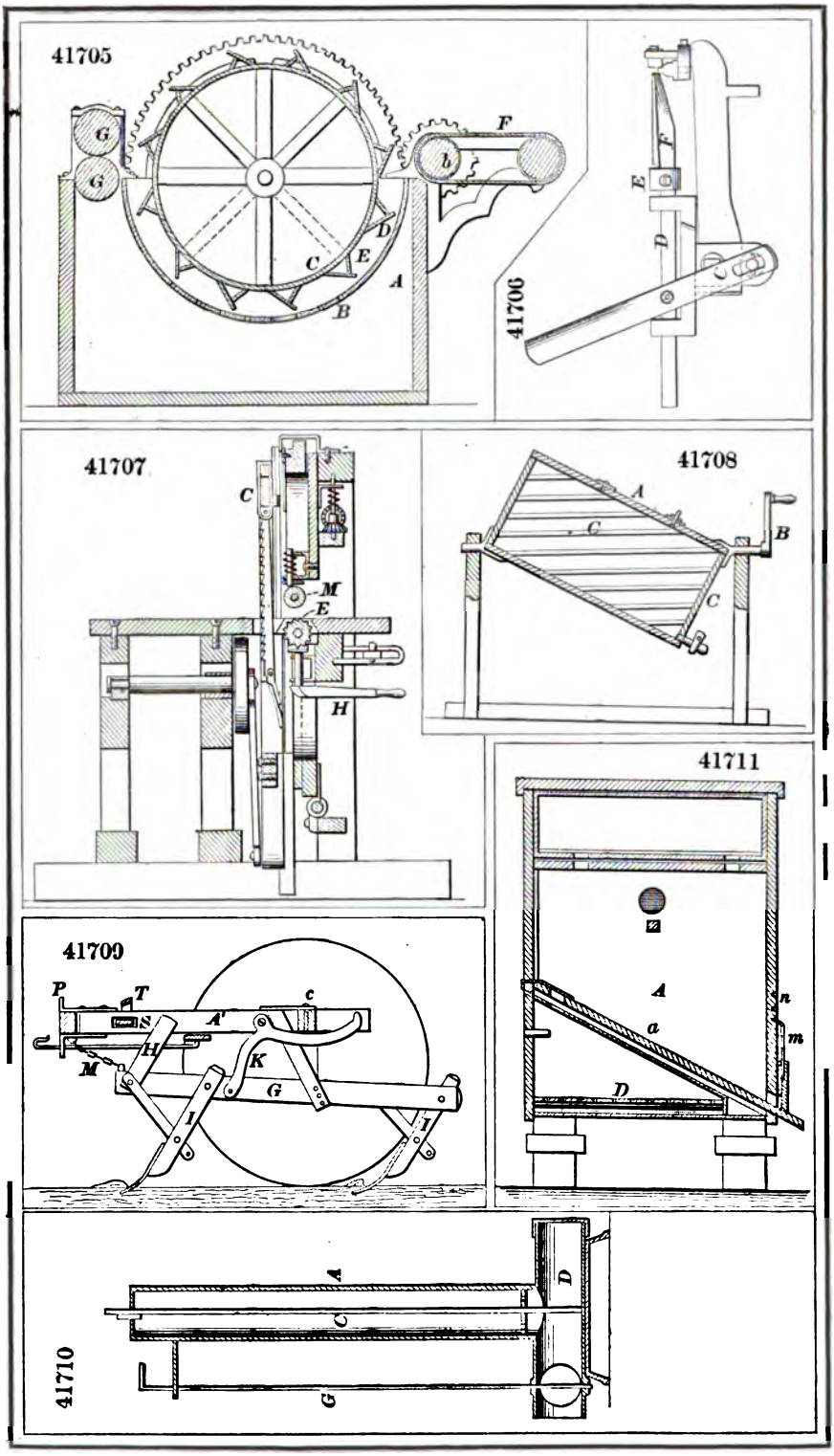
41705
G
G
F
b
D
C
E
A
B
41706
E
F
D
C
41707
C
M
E
H
41708
A
C
B
C
41709
P
T
c
A'
S
H
M
K
G
I
I
41711
A
a
n
m
D
41710
A
C
D
G

41712

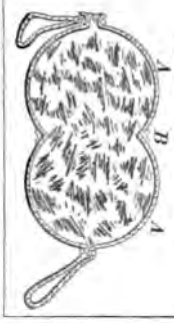

41715

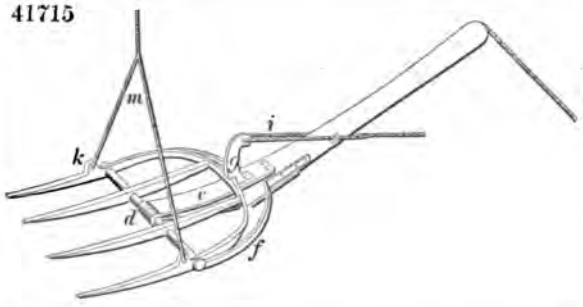

41713

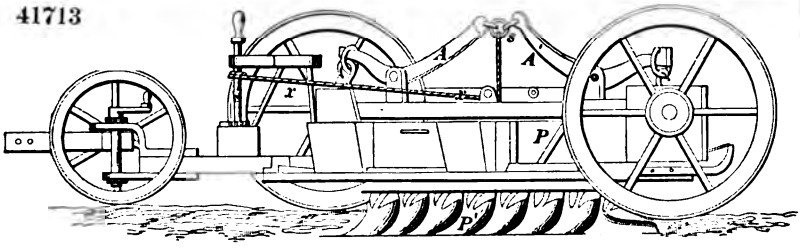

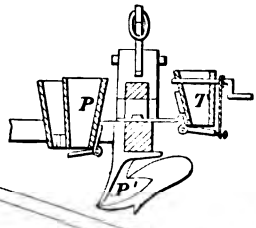

41714

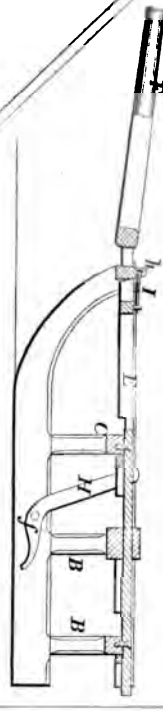

41716

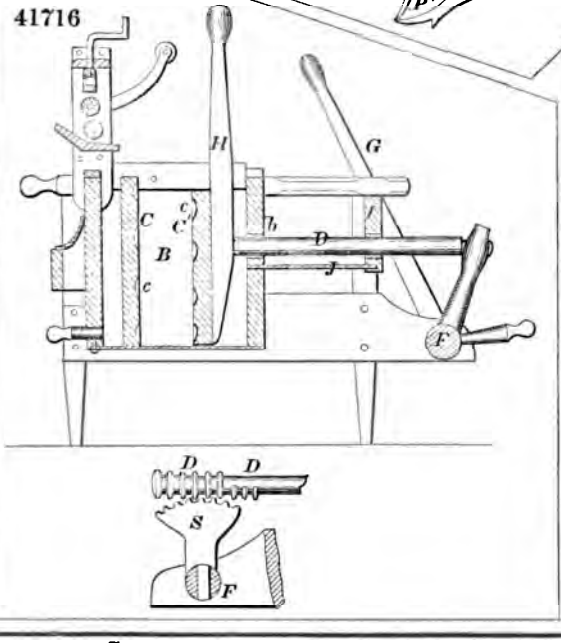

41719

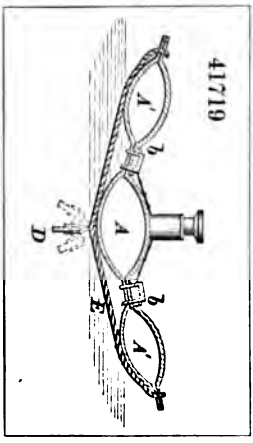

41717

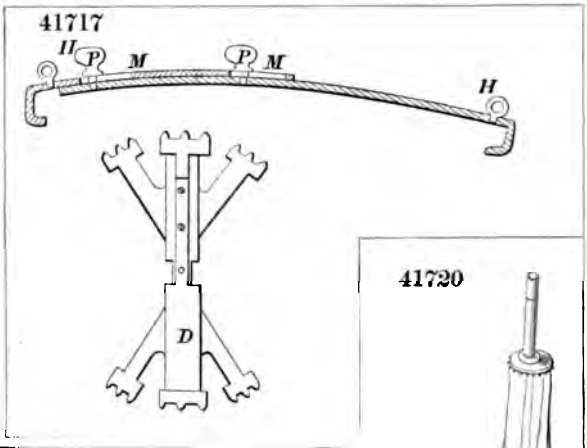

41720

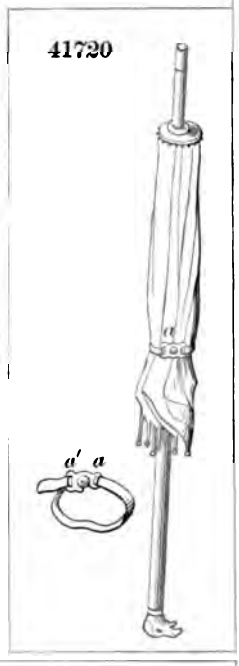

41721

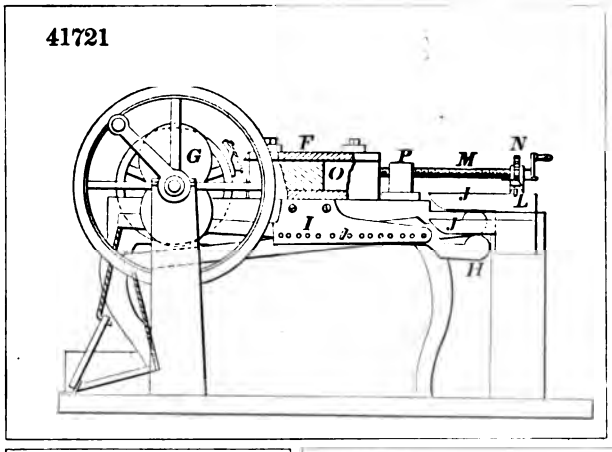

41718

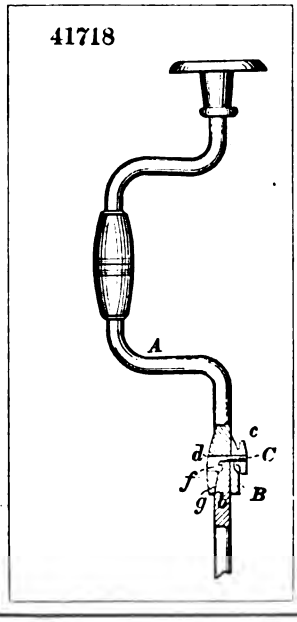

41722

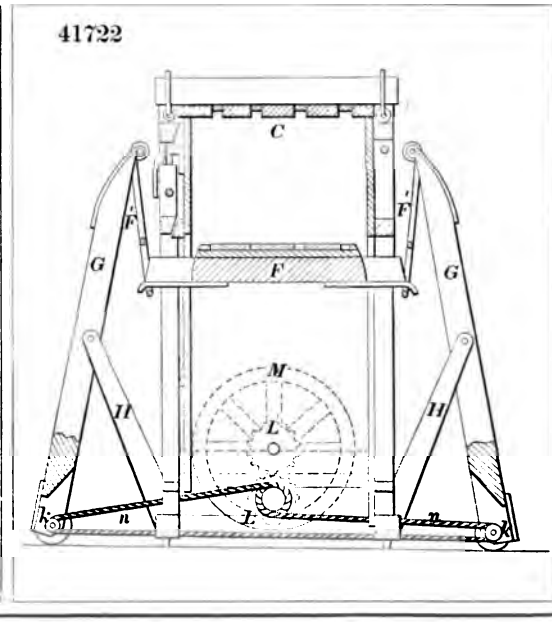

41723

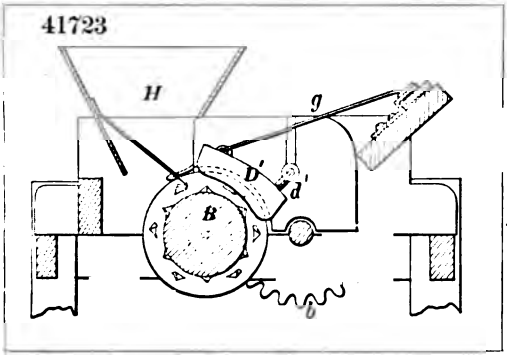

41725

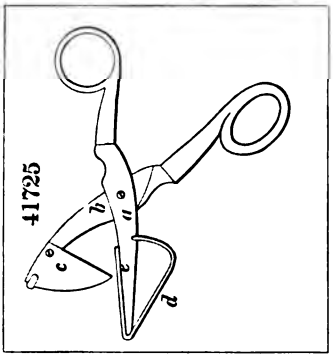

41726

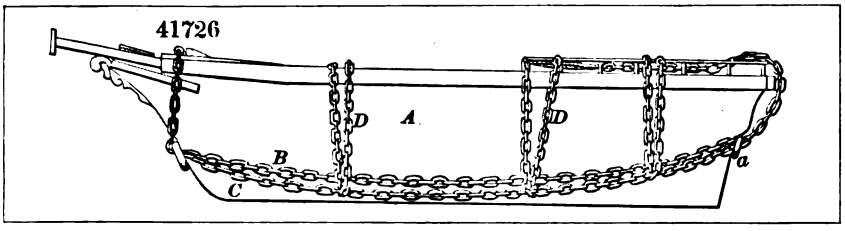

41727

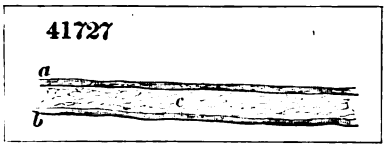

41728

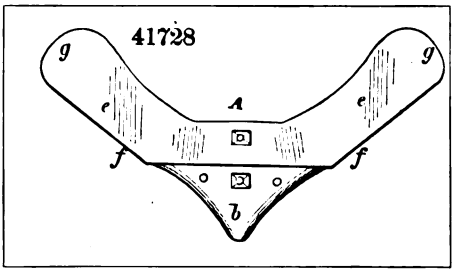

41730

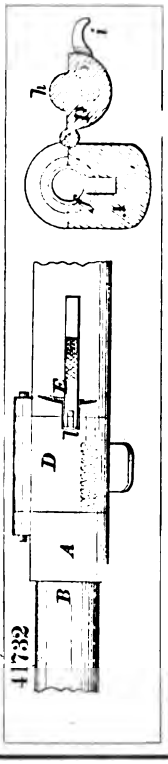

41732

41731

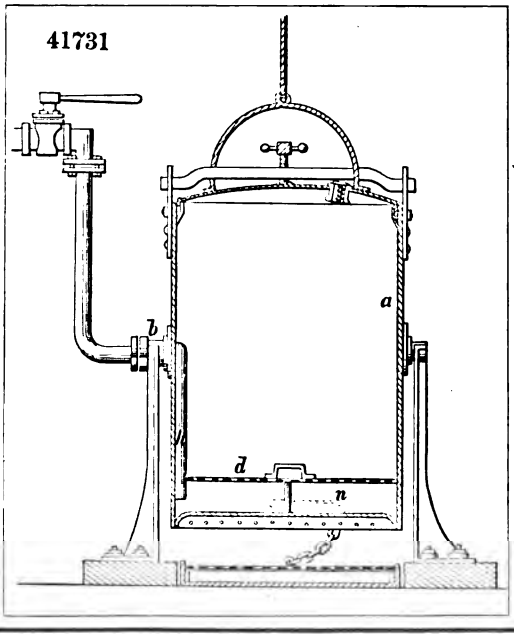

41733

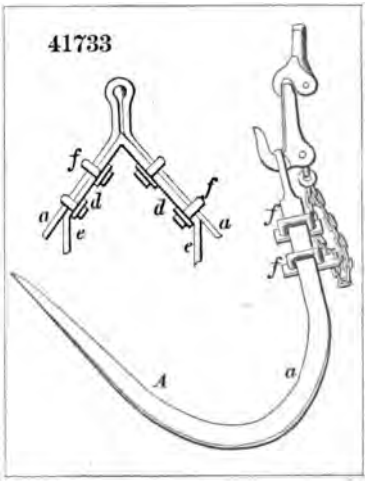

41734

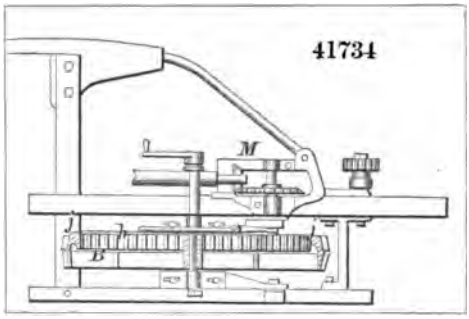

41736

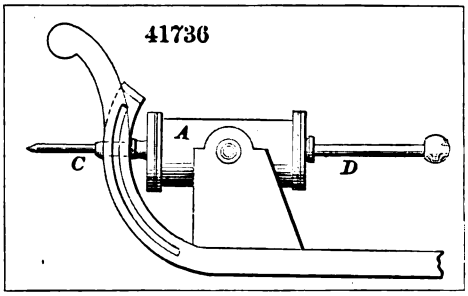

41735

41737

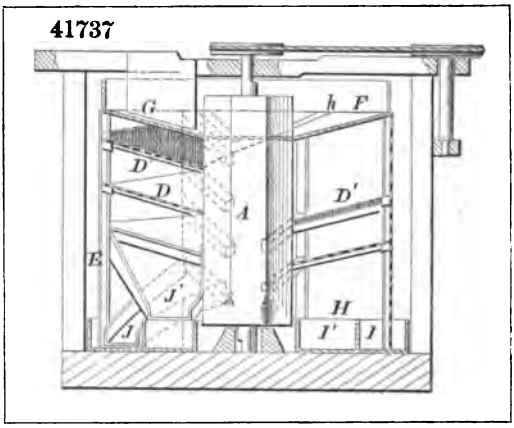

41738

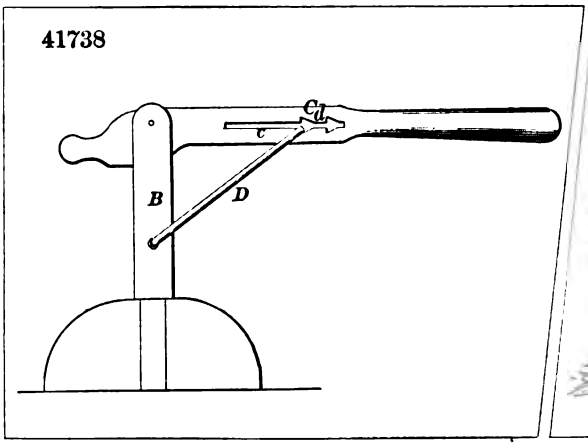

41739

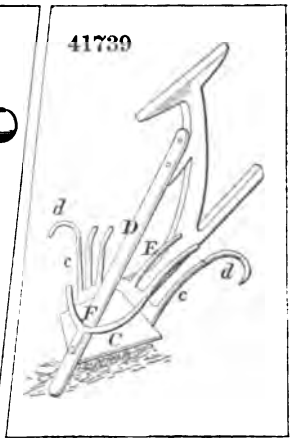

41740

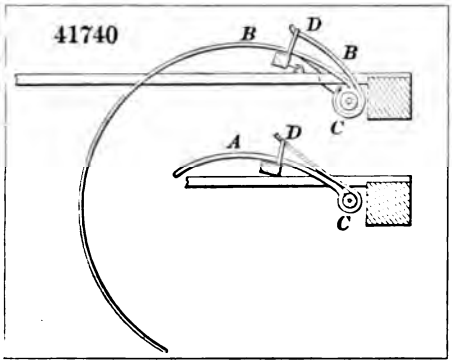

41742

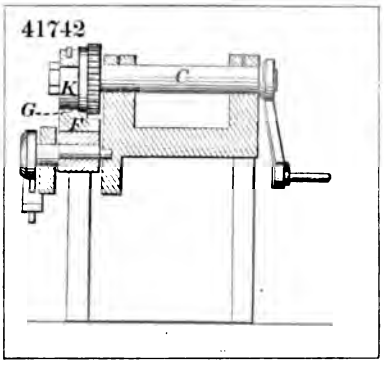

41741

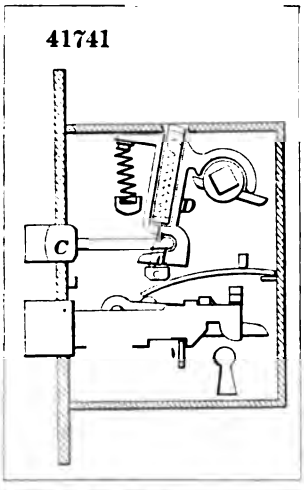

41743

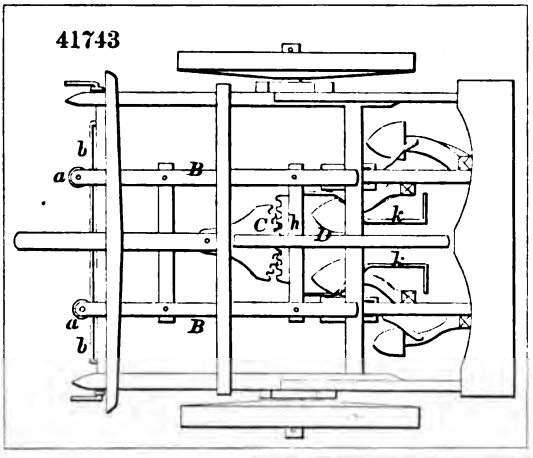

41745

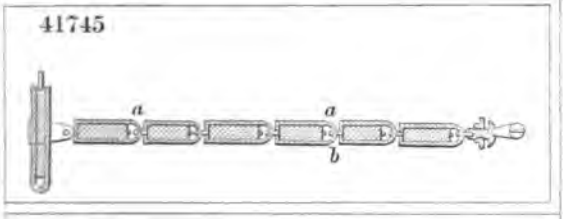

41744

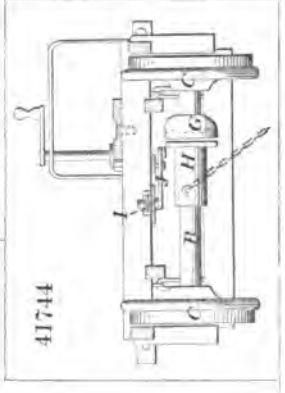

41746

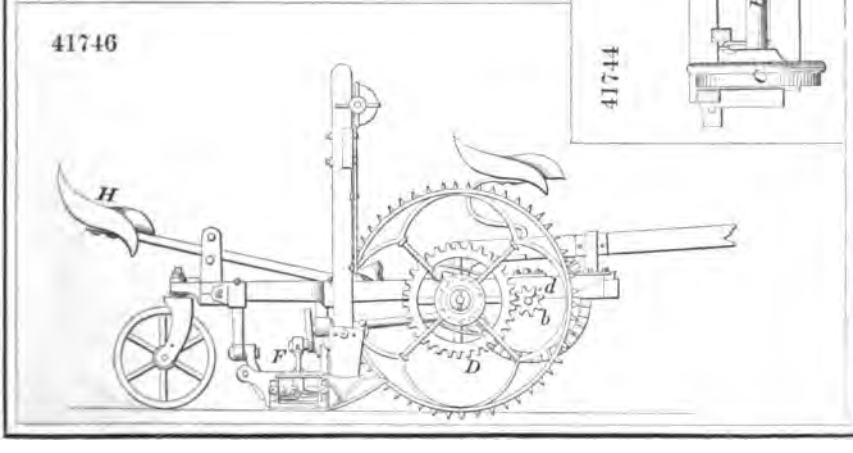

41747

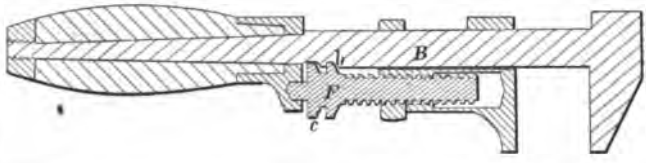

41749

41748

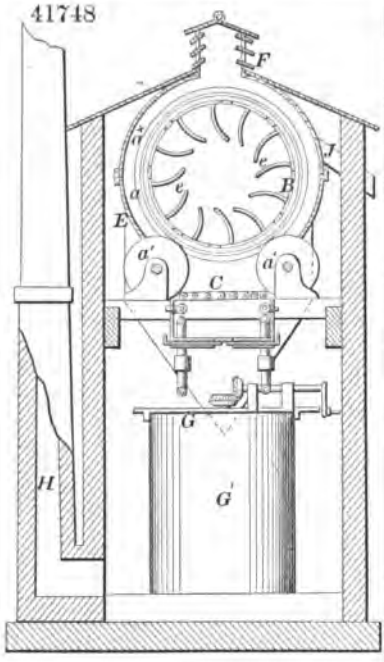

41752

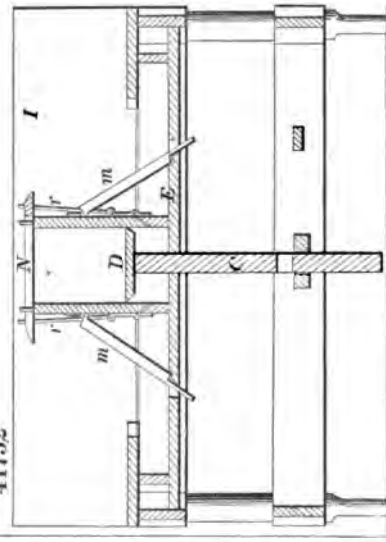

41753

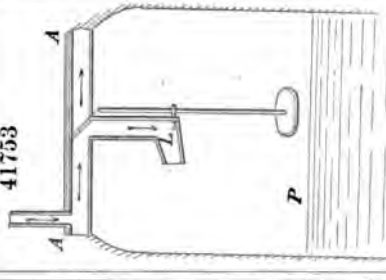

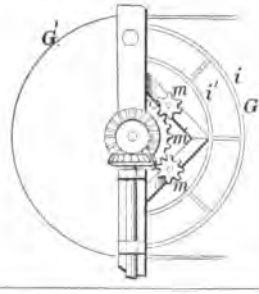

41754

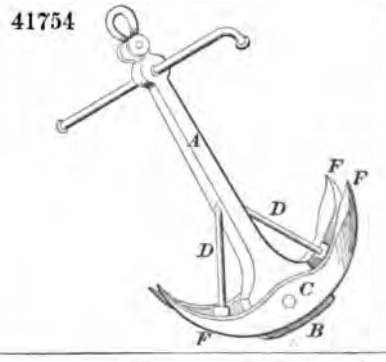

41751

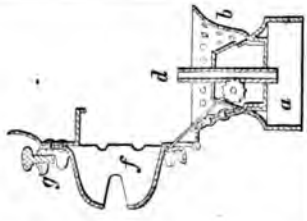

41755

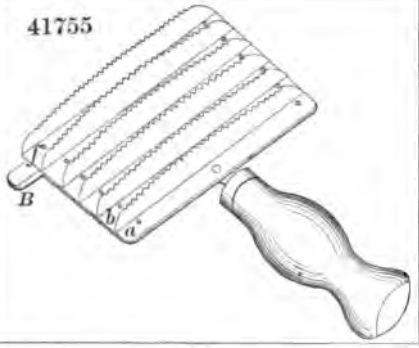

41760

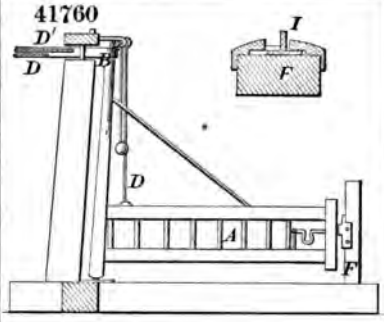

41758

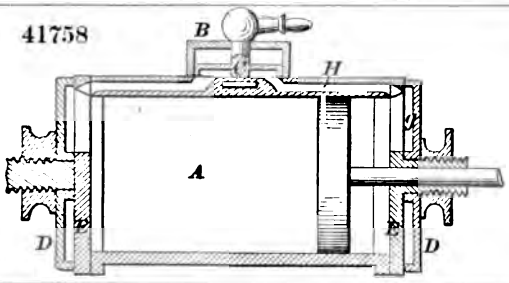

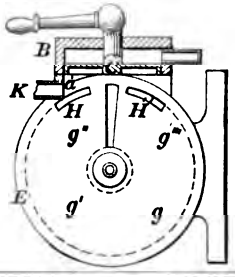

41756

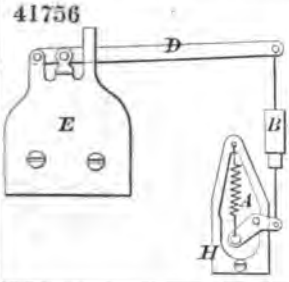

41759

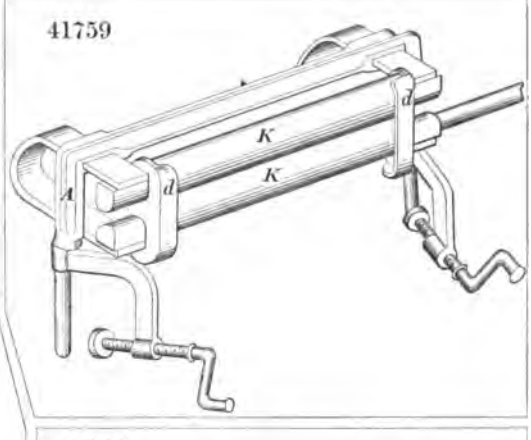

41757

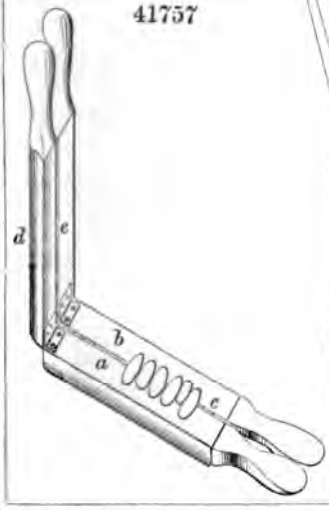

41761

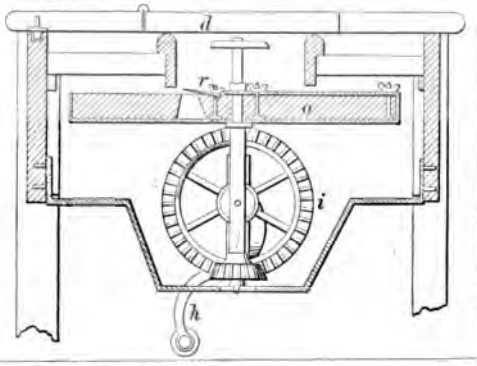

41762

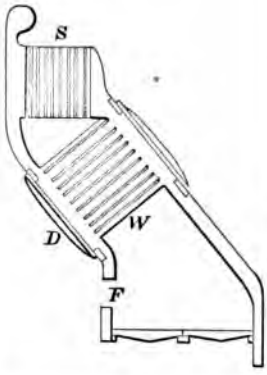

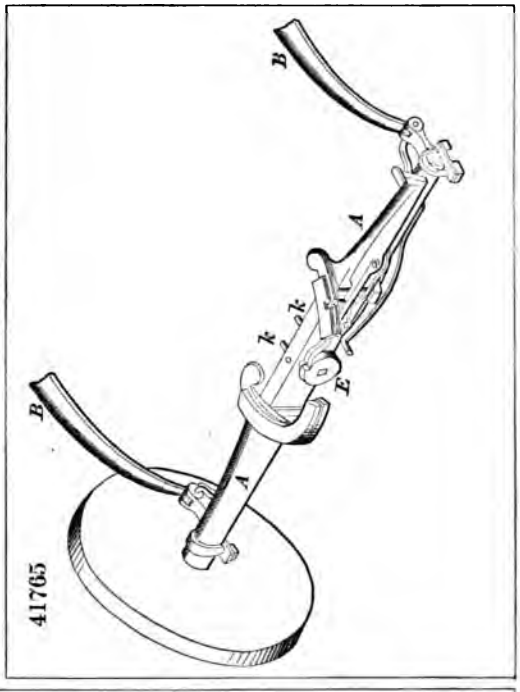

41765

41764

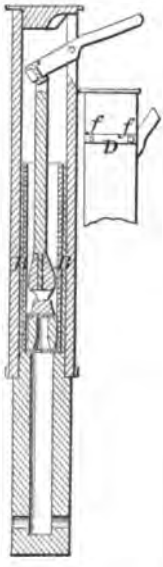

41763

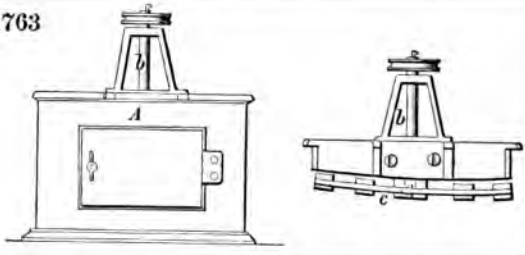

41767

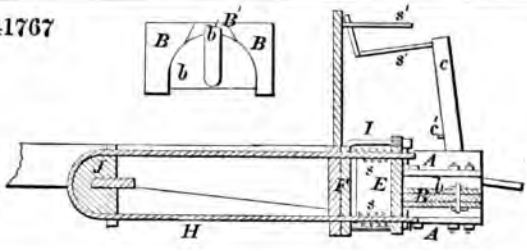

41766

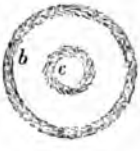

41768

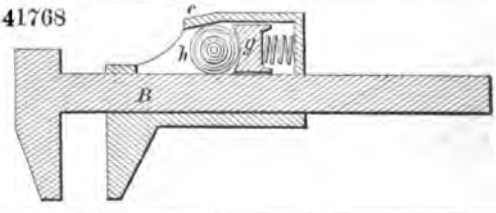

41769

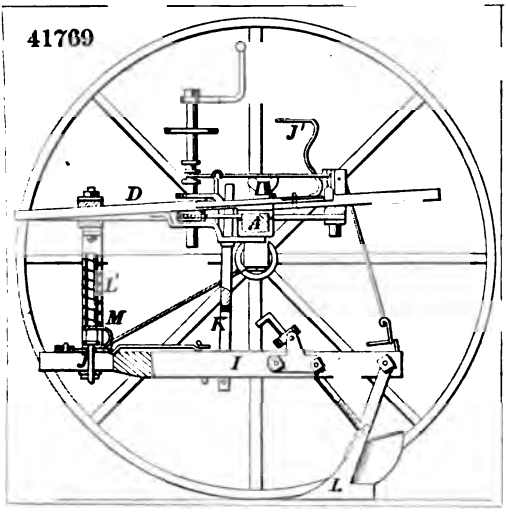

41770

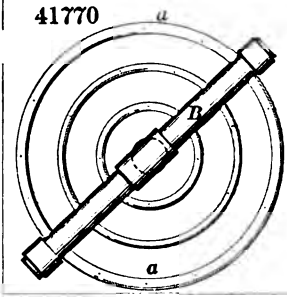

41774

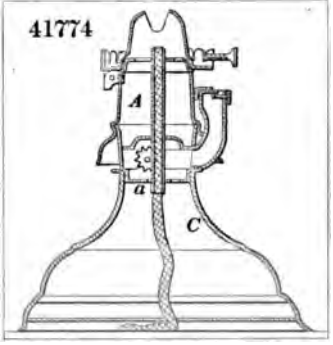

41771

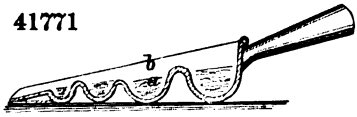

41772

41773

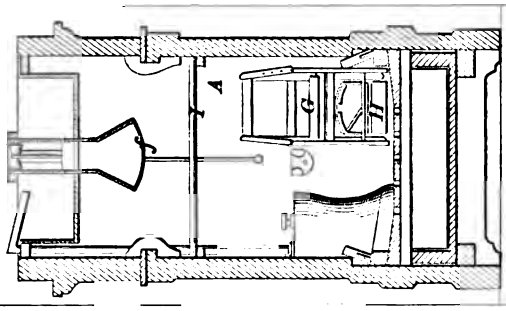

41777

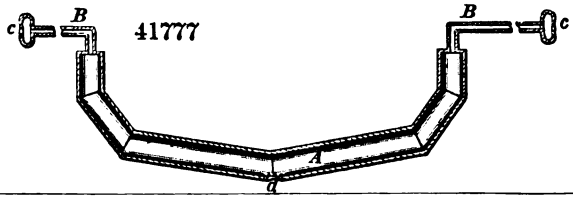

41775

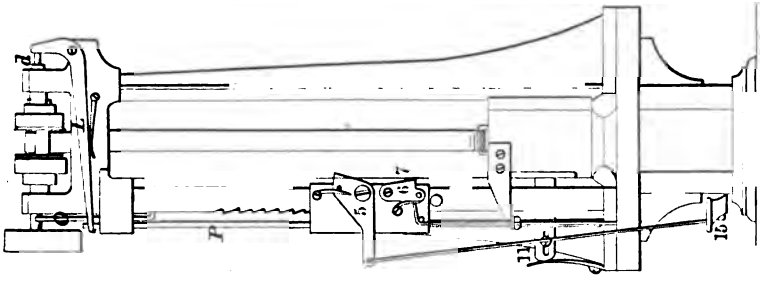

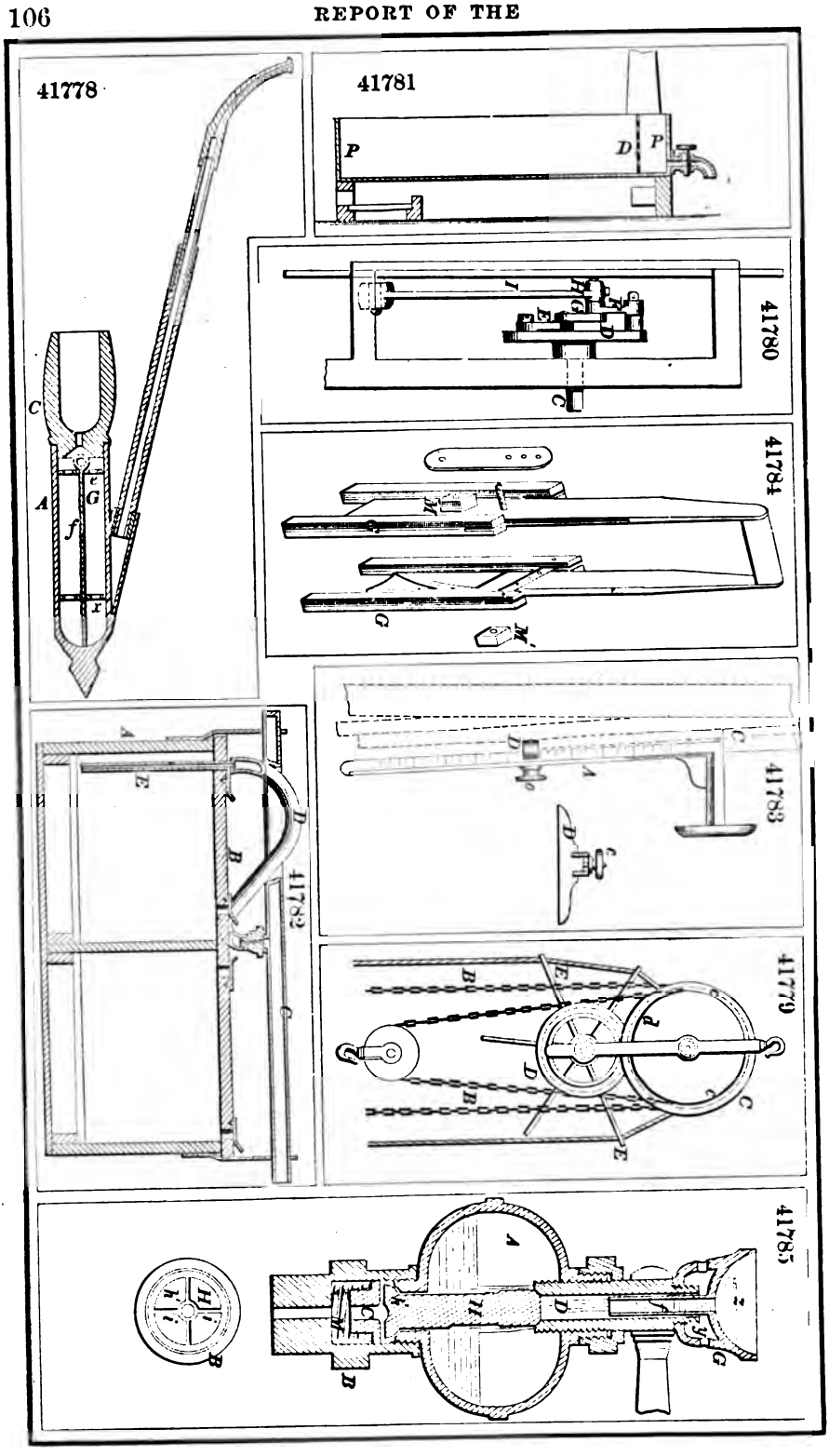
41778
41781
41780
41784
41783
41779
41785

41786

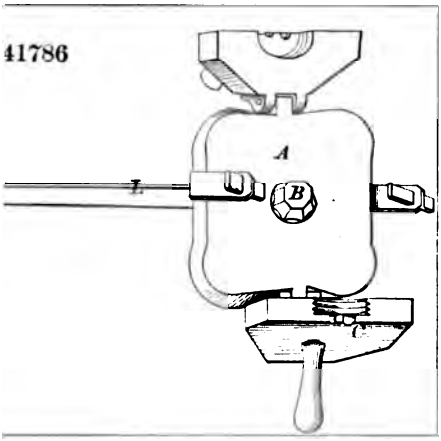

41788

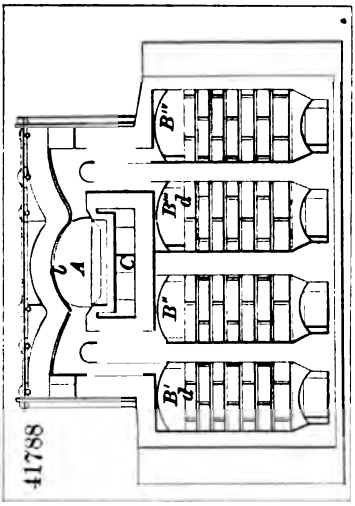

41795

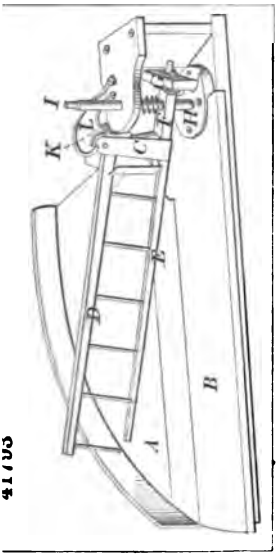

41789

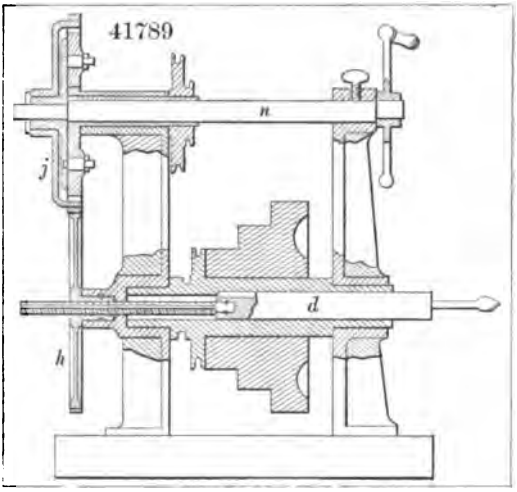

41790

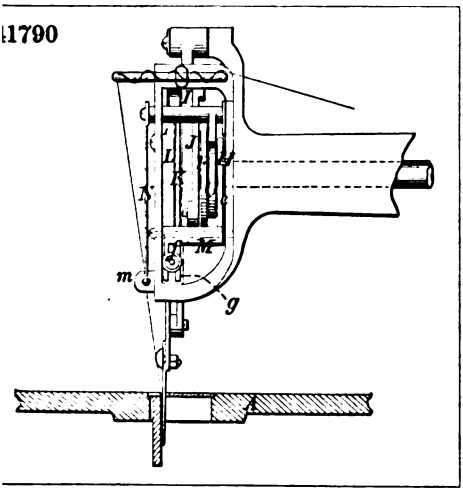

41792

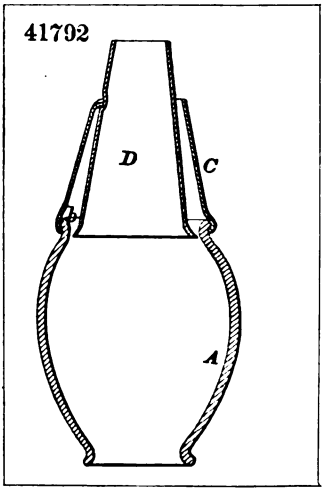

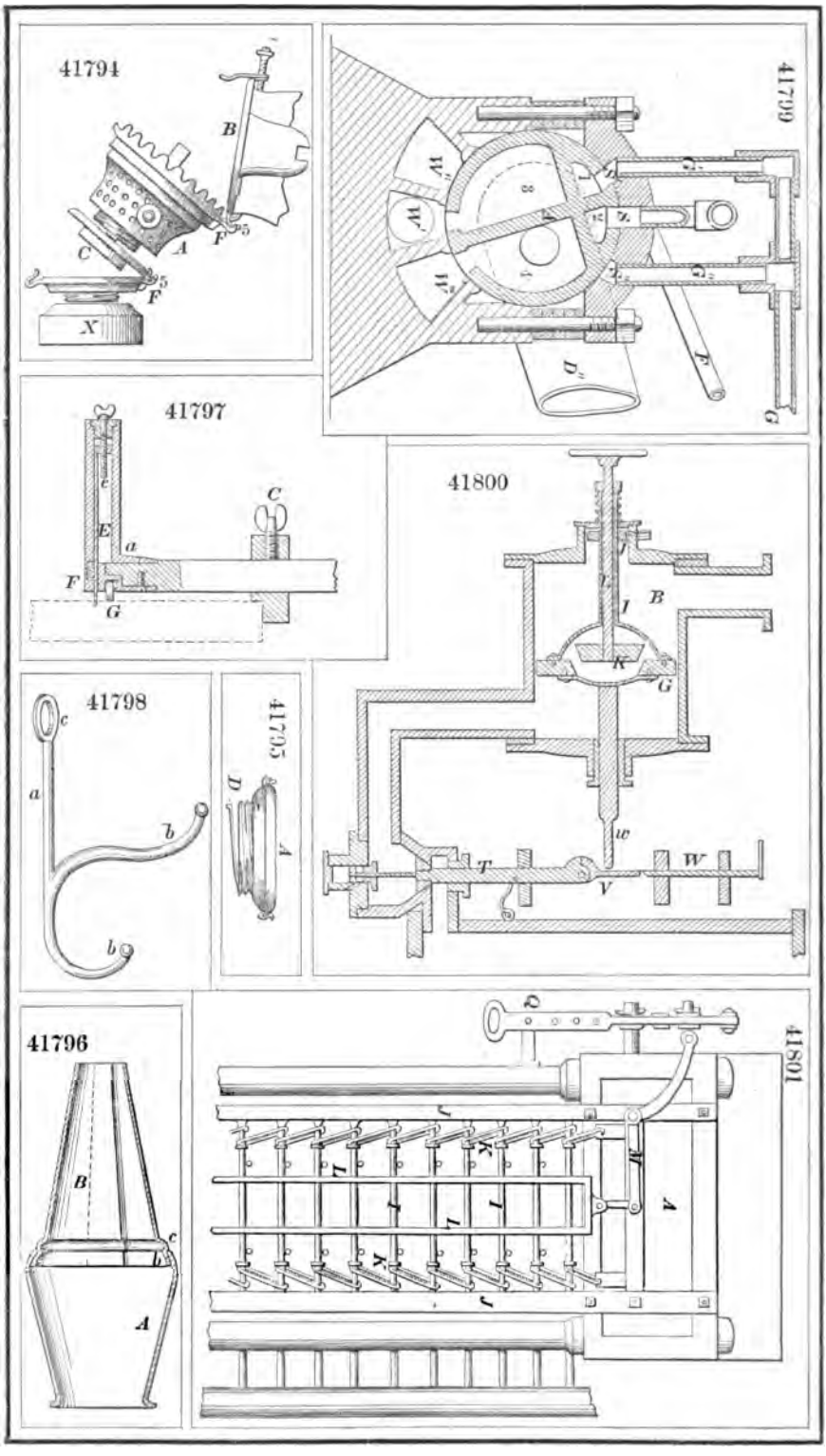
41799
41800
41801
41794
41797
41798
41795
41796

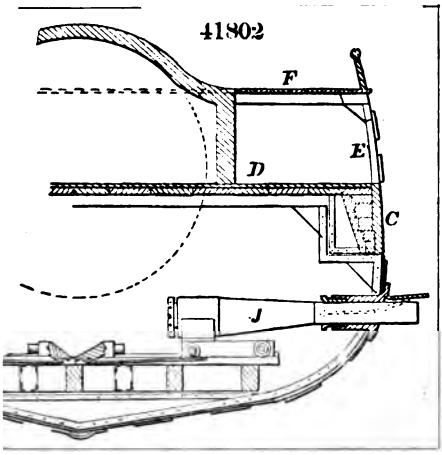
41802
F
E
D
C
J

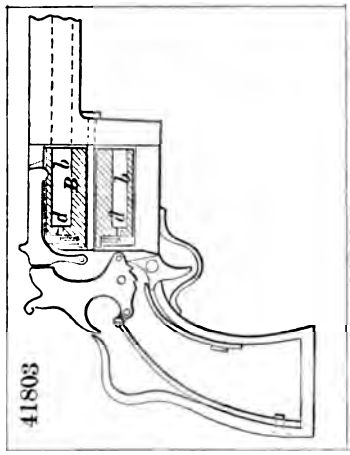
41803
b
B
d
d
b

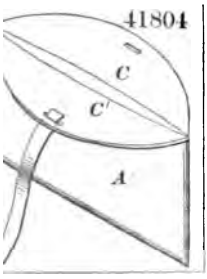
41804
C
C'
A

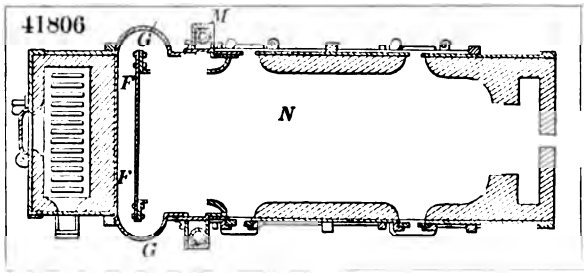
41806
M
G
F
N
F
G

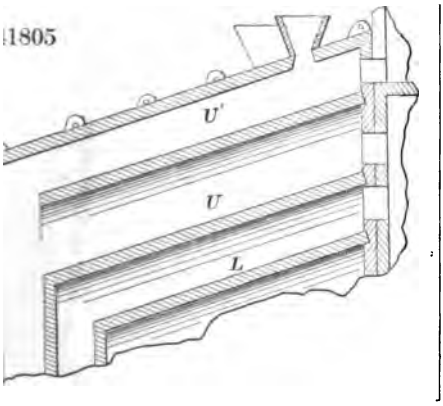
41805
U'
U
L

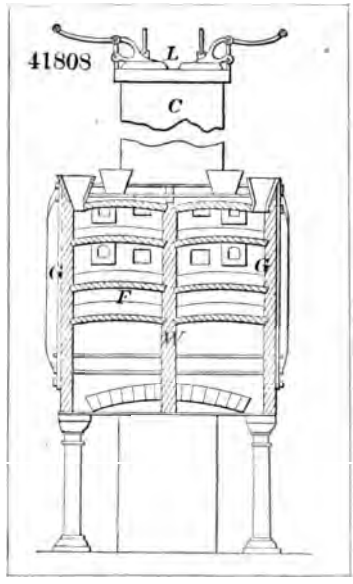
41808
L
C
G
G
F
W

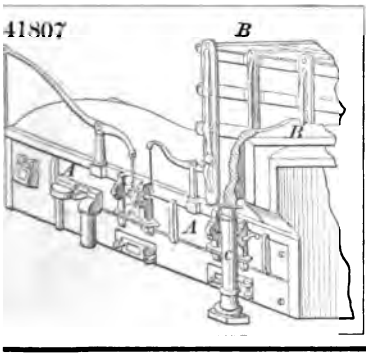
41807
B
B
A
A

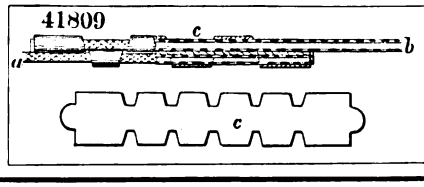
41809
c
a
b
c

41810

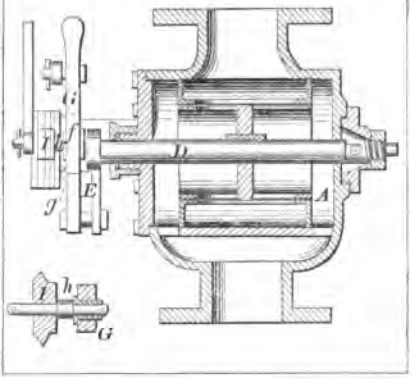

41812

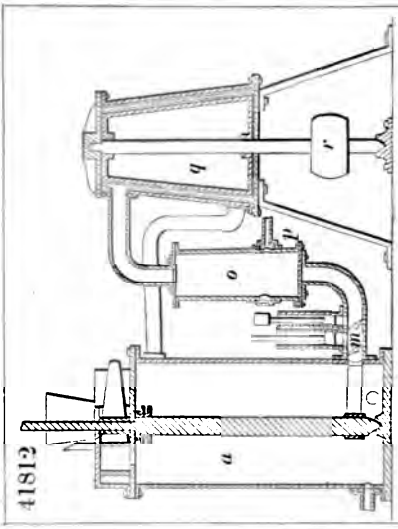

41813

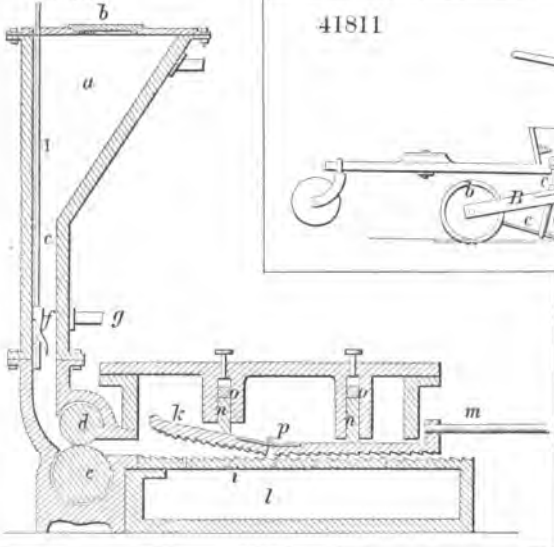

41811

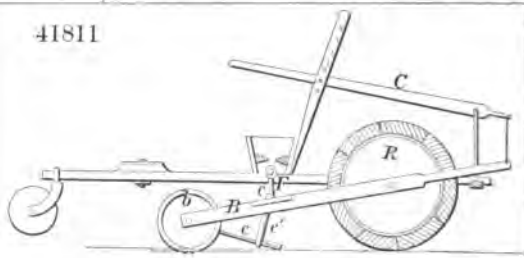

41816

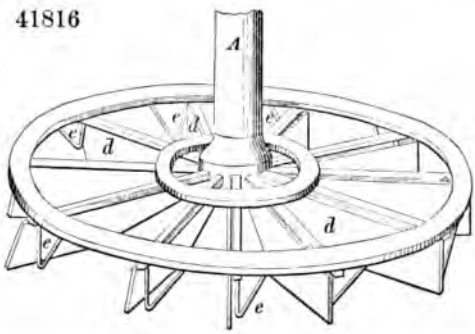

41814

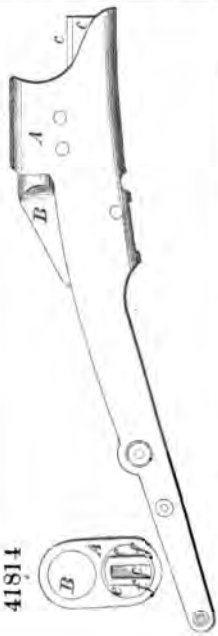

41817

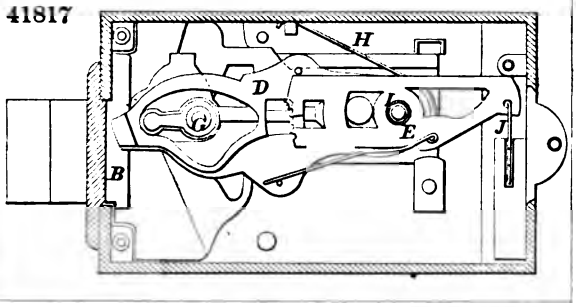

41818

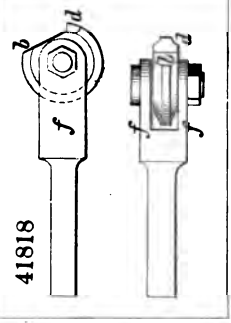

41819

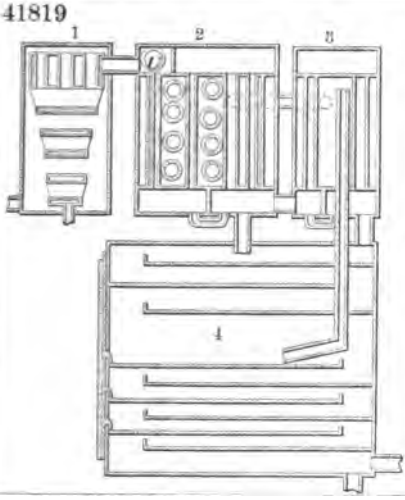

41820

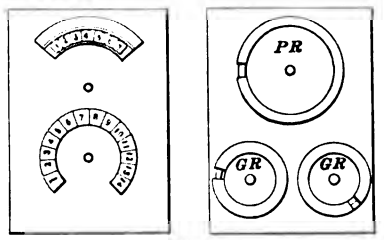

41825

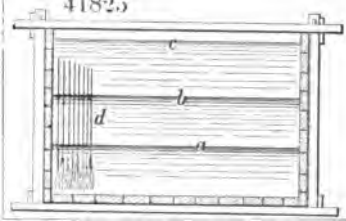

41824

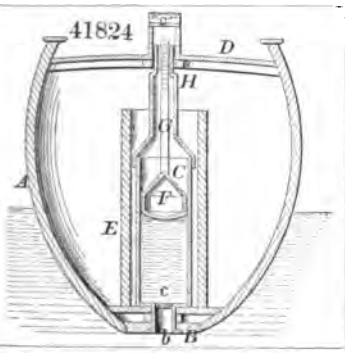

41821

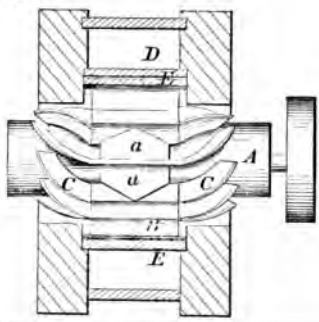

41822

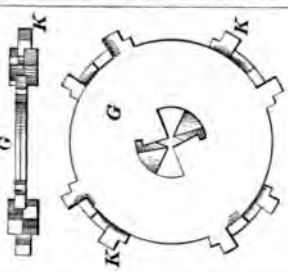

41826

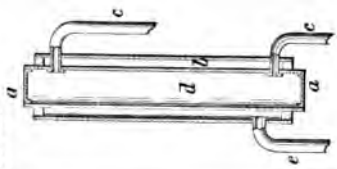

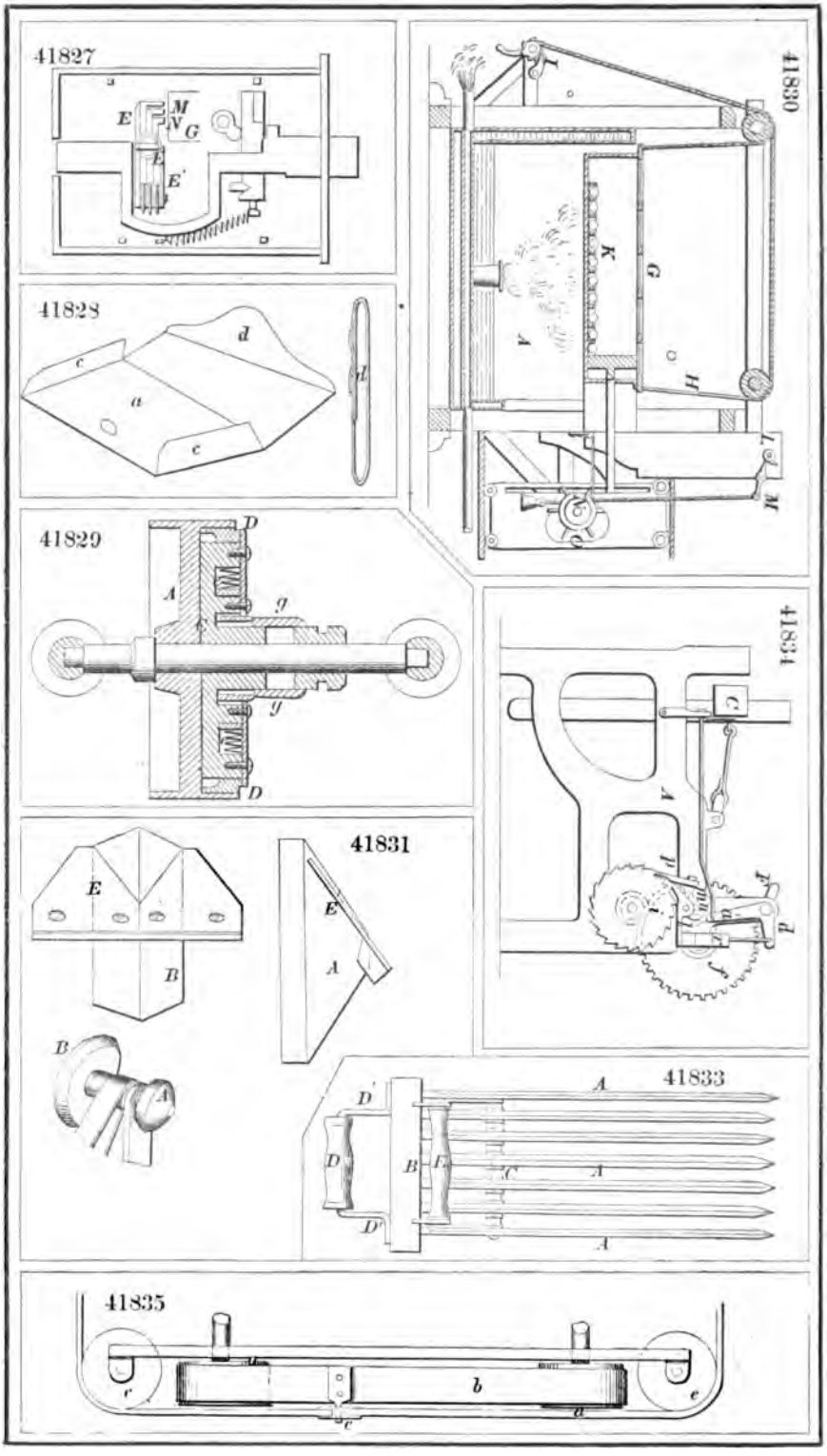
41830
41834
41833
41831
41829
41828
41827
41835

41836

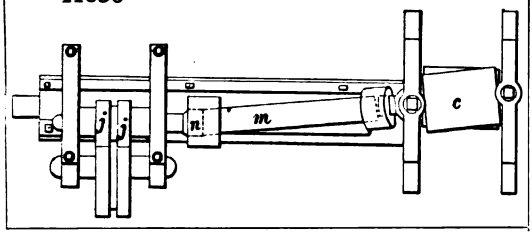

41837

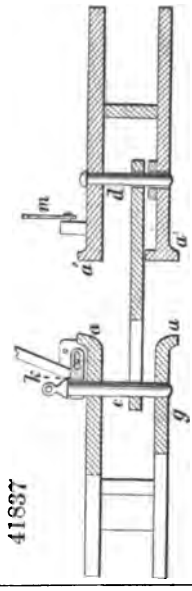

41839

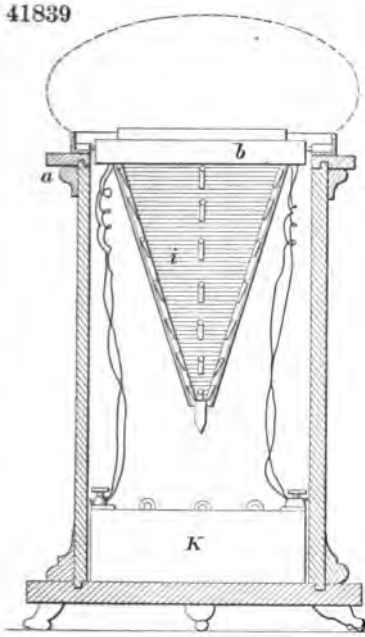

41838

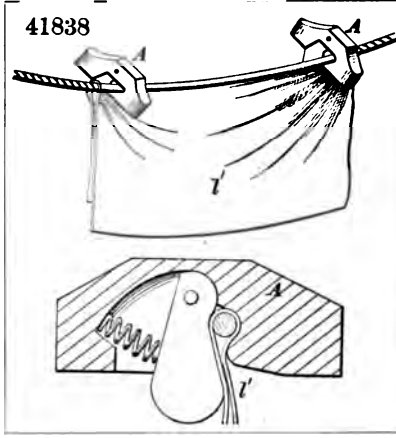

41841

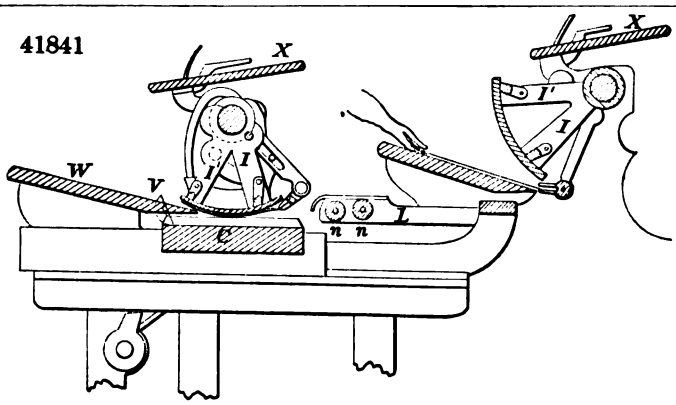

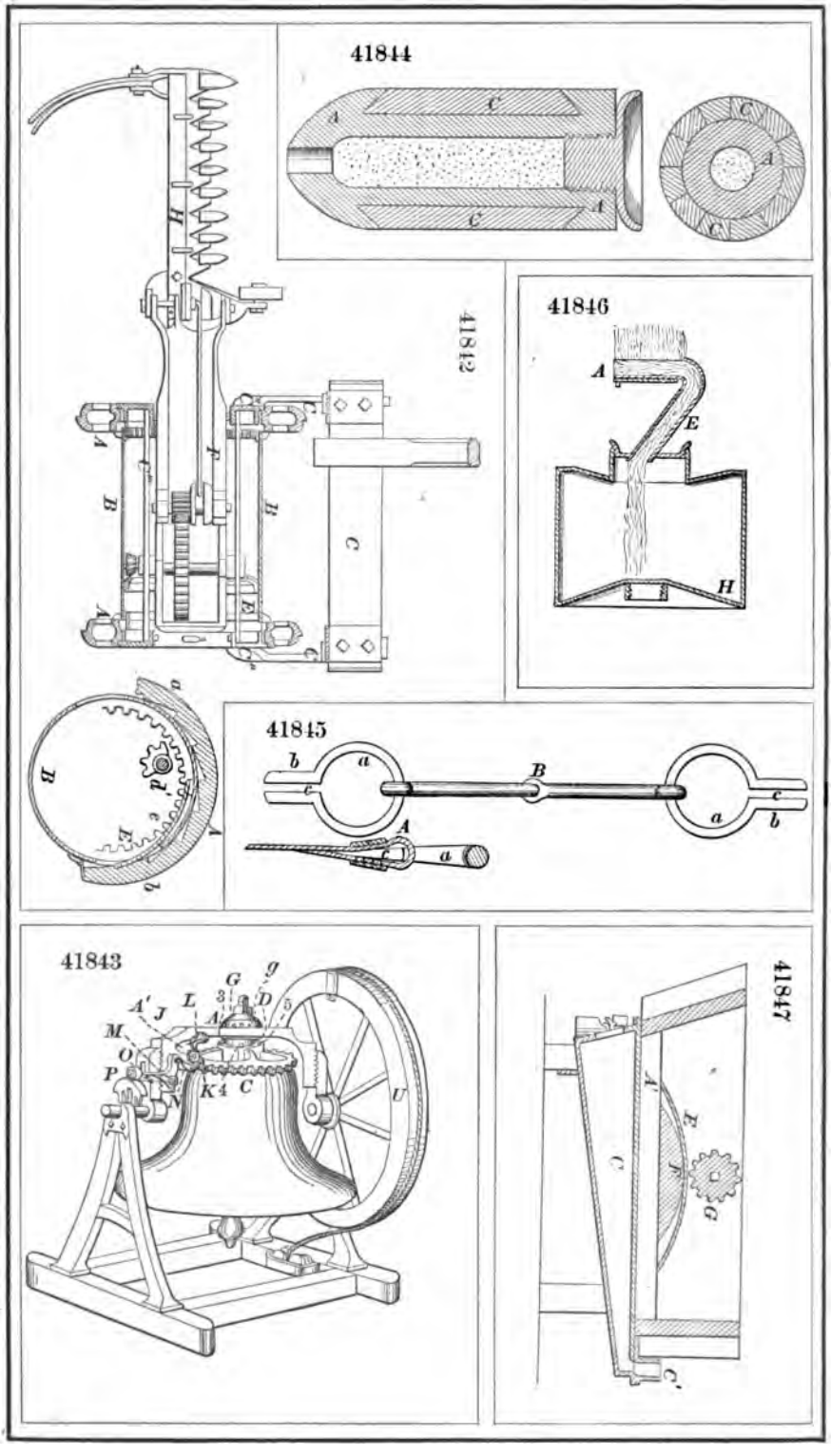
41844
41842
41846
41845
41843
41847

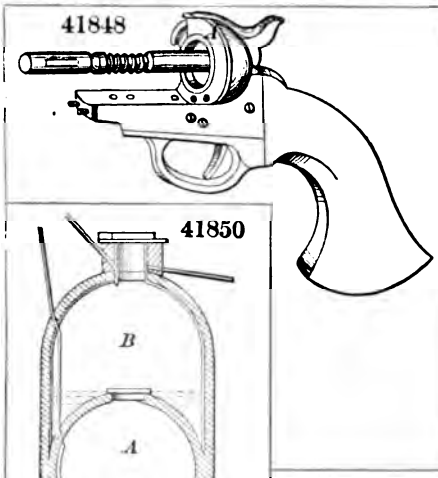
41848

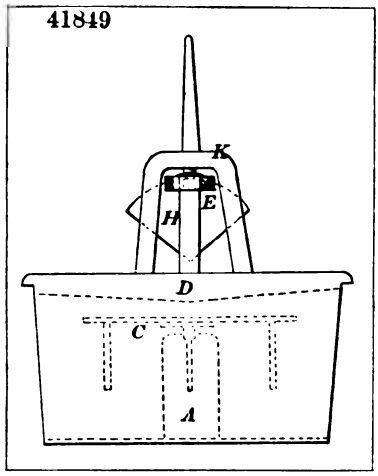
41849
K
E
H
D
C
A

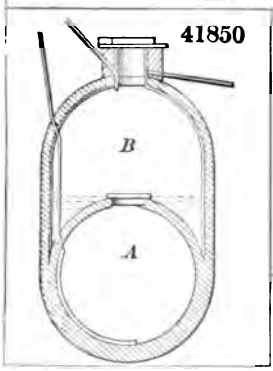
41850
B
A

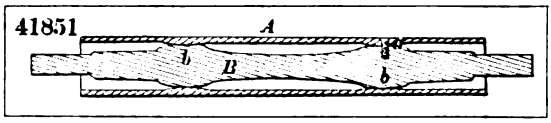
41851
A
b
B
b

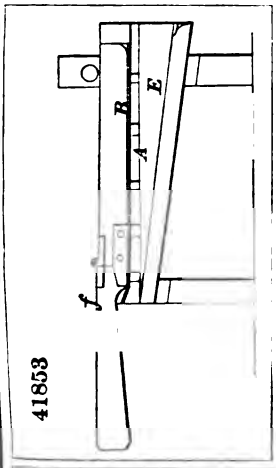
41853
B
E
A
f

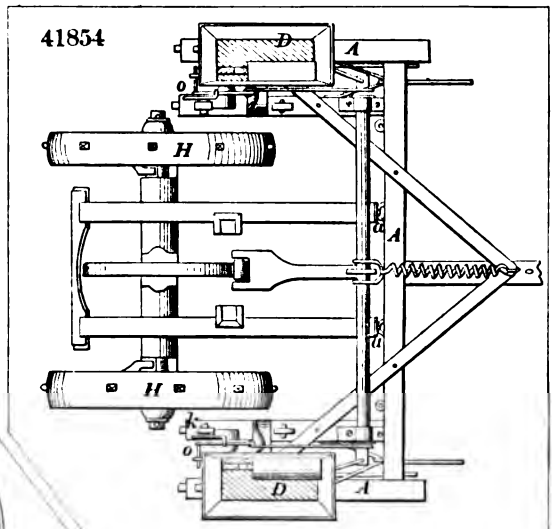
41854
D
A
o
H
A
H
o
D
A

41852
d
c
L

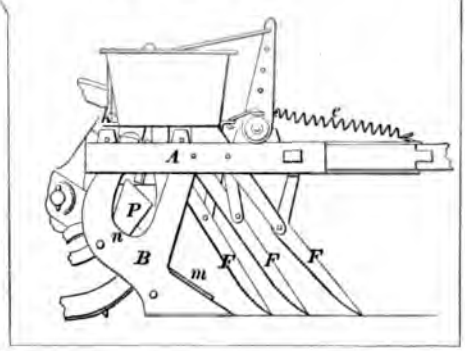
A
P
n
B
m
F
F
F

41855

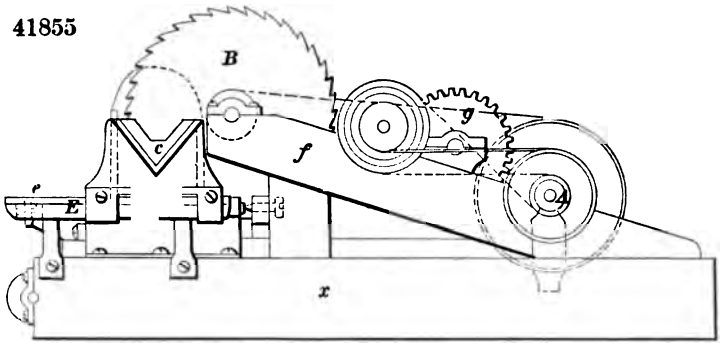

41857

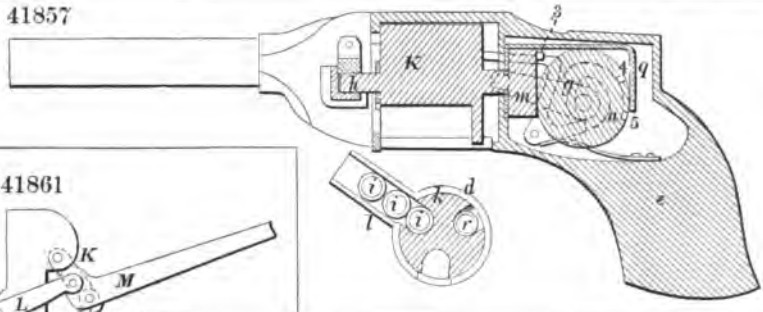

41861

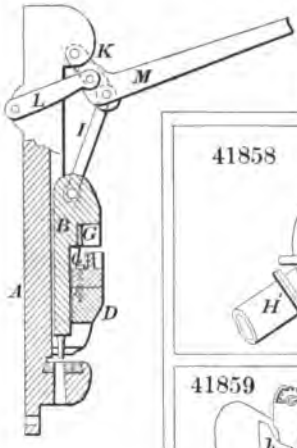

41858

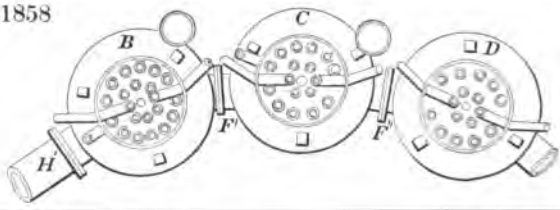

41859

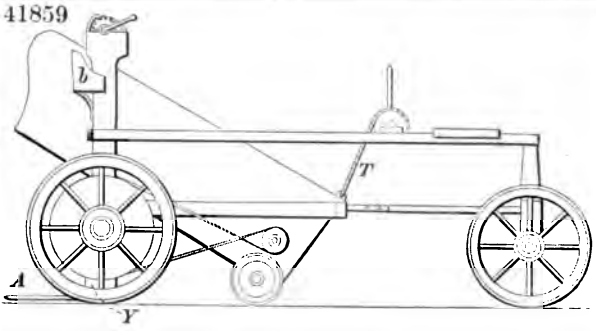

41856

41860

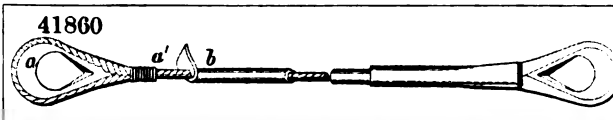

41862

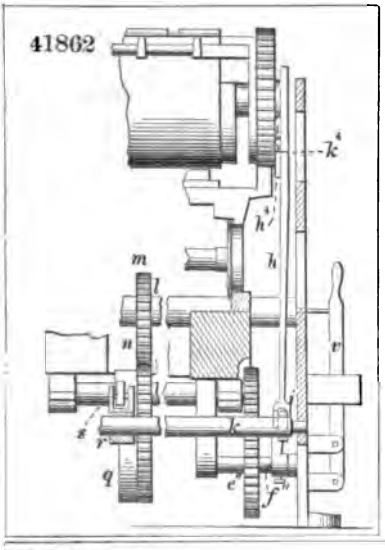

41865

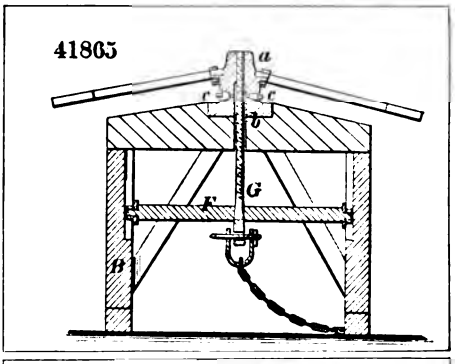

41867

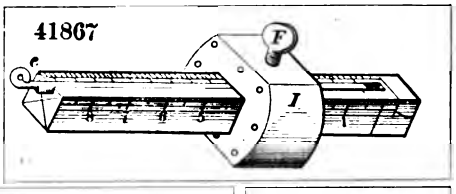

41863

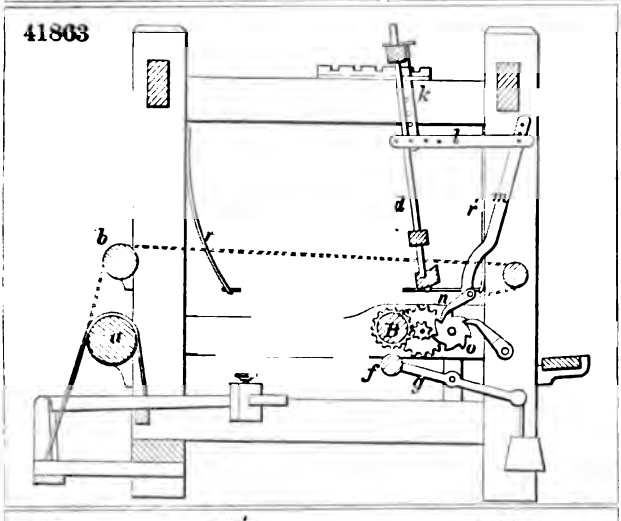

41864

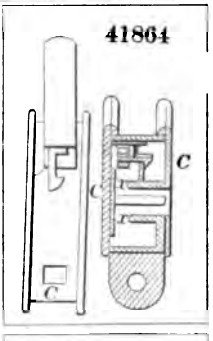

41868

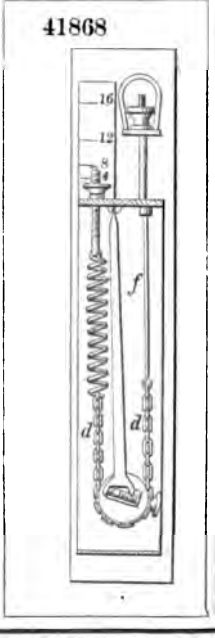

41866

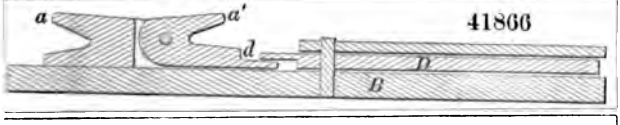

41869

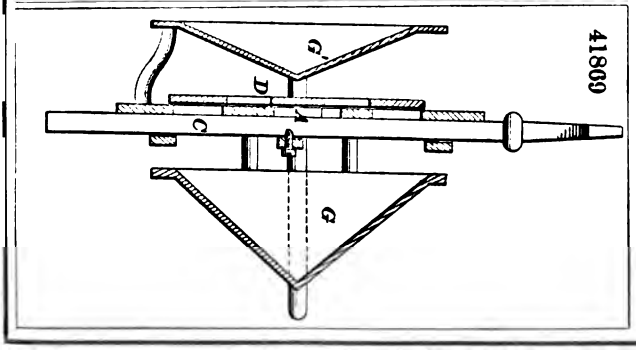

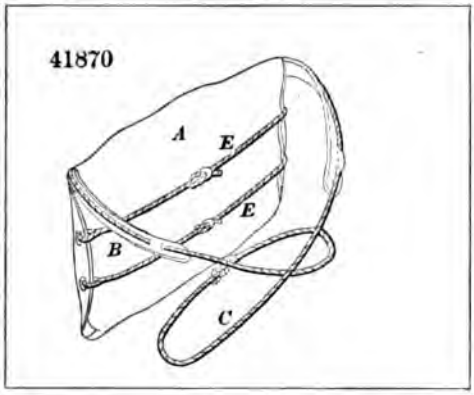
41870
A
E
E
B
C

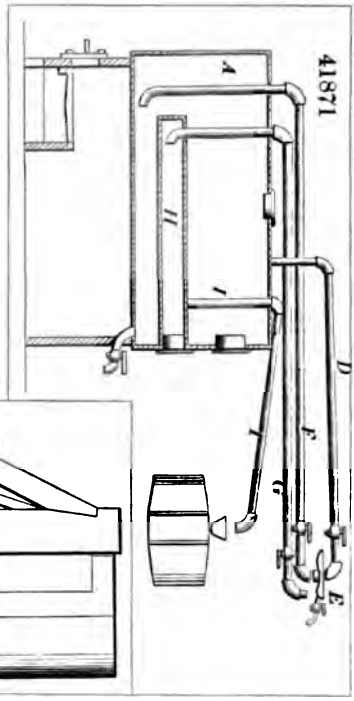
41871
A
H
I
D
F
G
E

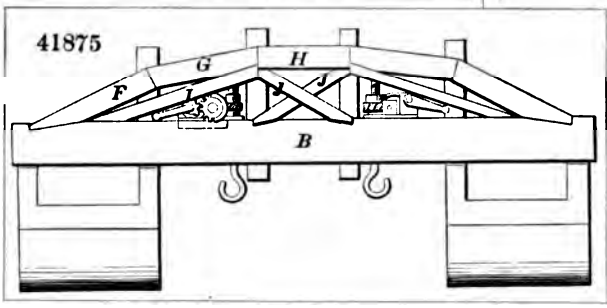
41875
G
H
F
J
J
B

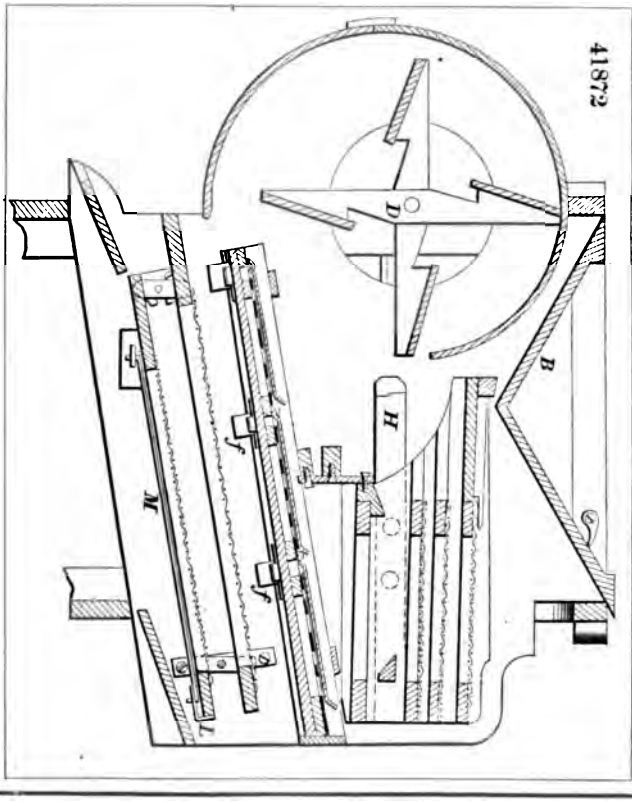
41872
D
B
H
M
L

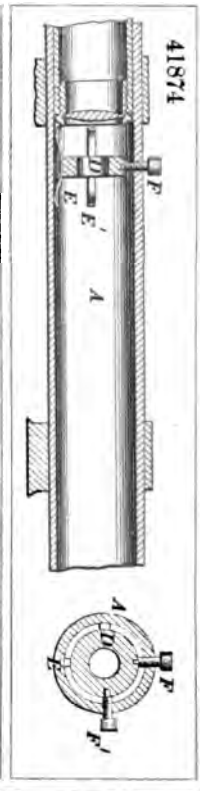
41874
F
D
E
E'
A
A
F
F'

41876

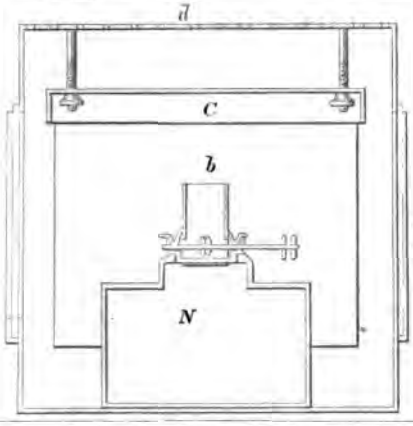

41879

41881

41877

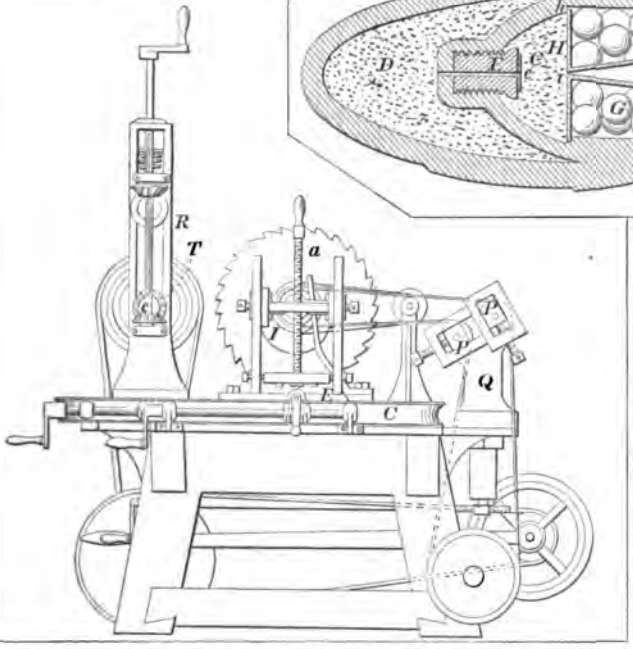

41882

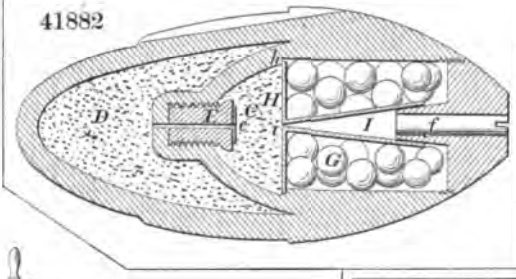

41880

41883

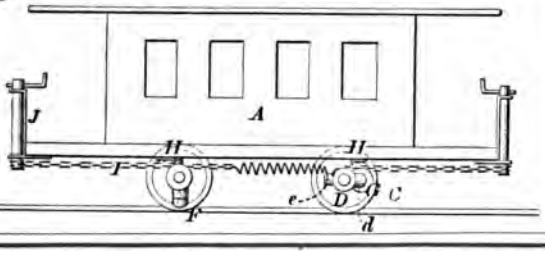

41884

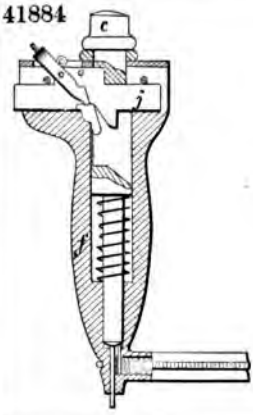

41885

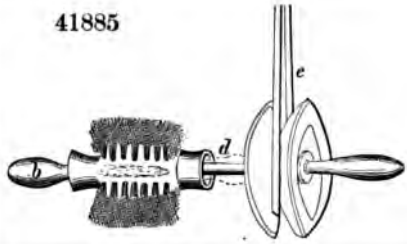

41886

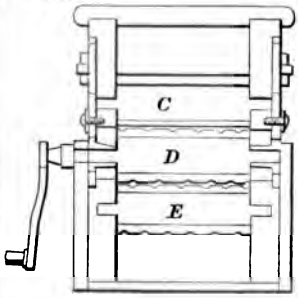

41890 K

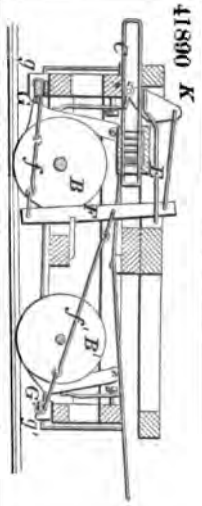

41889

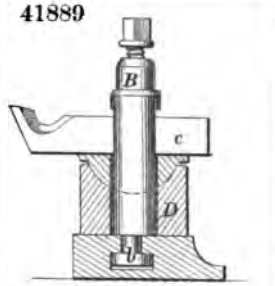

41891

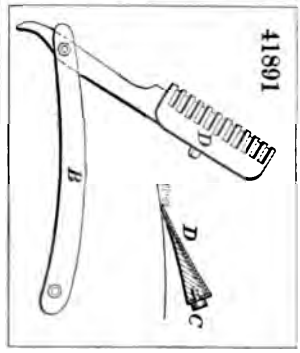

41888

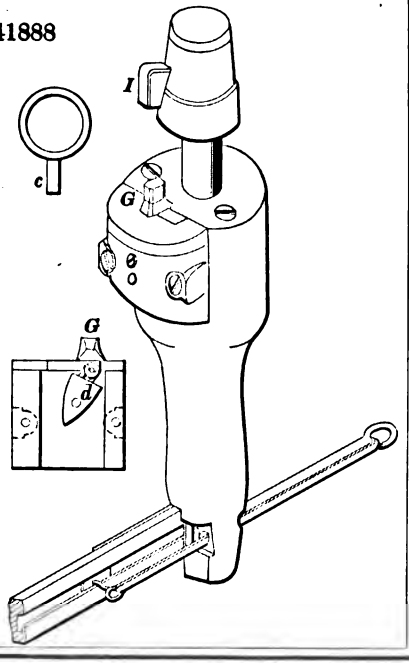

41892

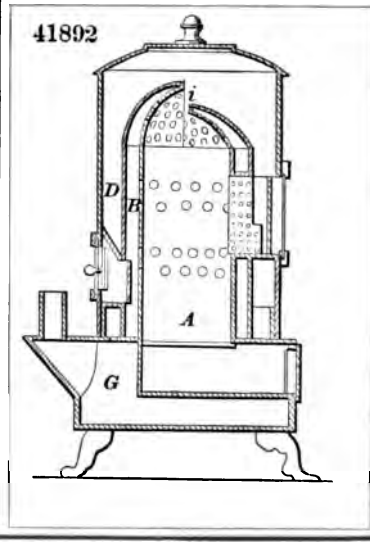

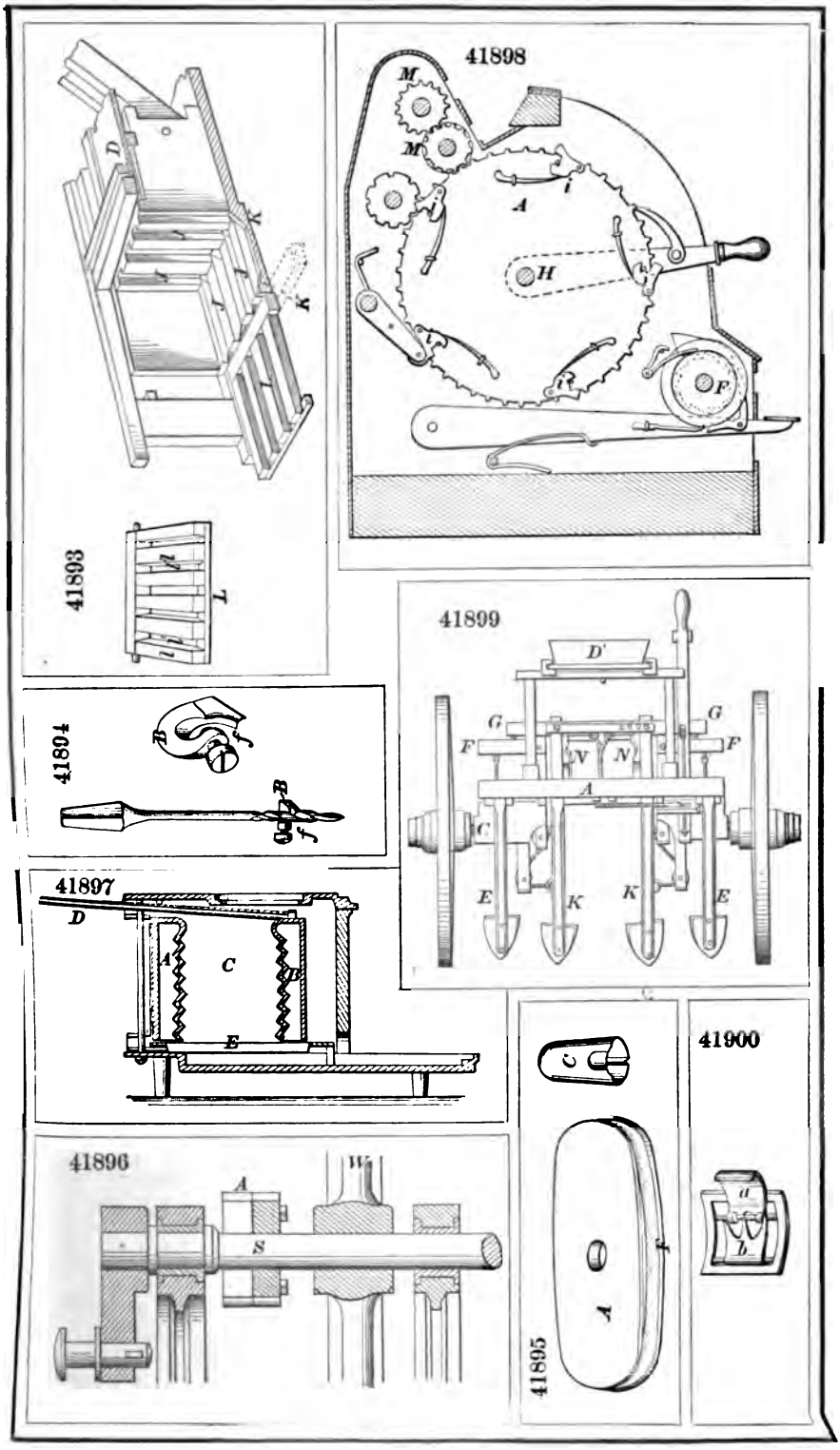
41898
M
M
A
i
H
F
41893
D
K
L
41894
B
f
41899
D'
G
G
F
F
N
N
A
C
E
K
K
E
41897
D
A
C
B
E
41900
a
b
41896
A
W
S
41895
A

41901

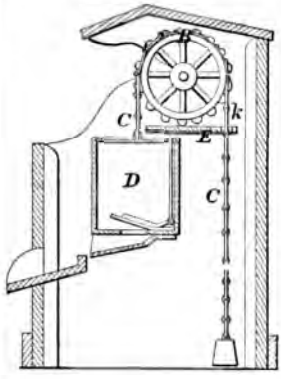

41906

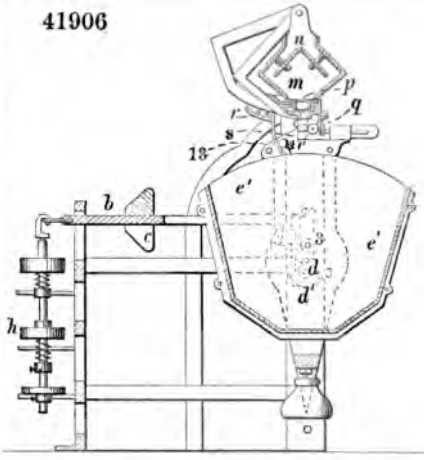

41905

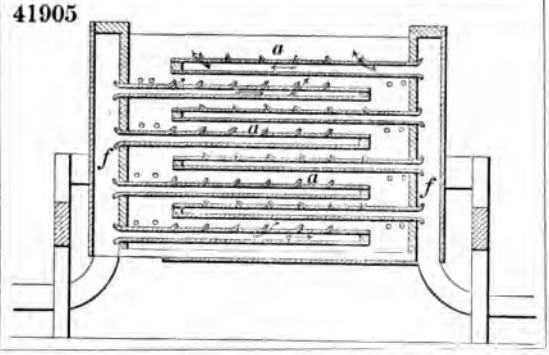

41904

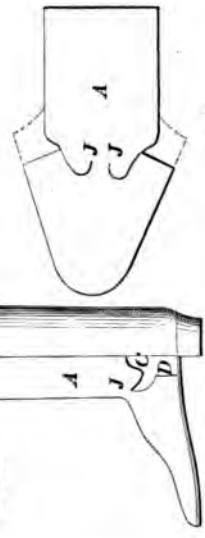

41902

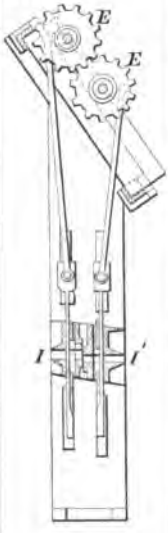

41903

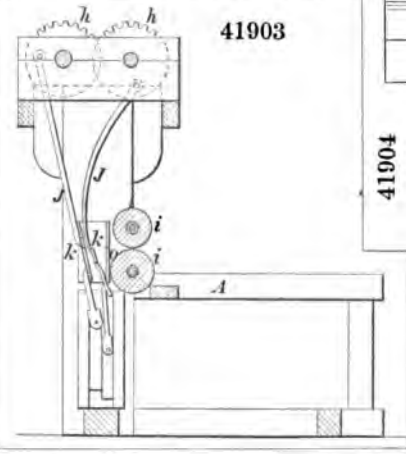

41907

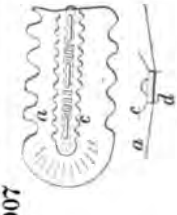

41908

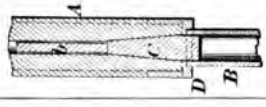

41909

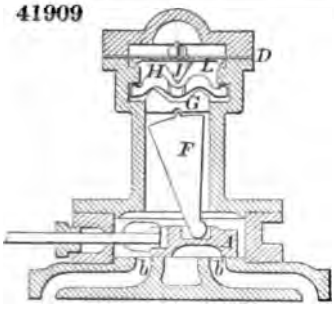

41914

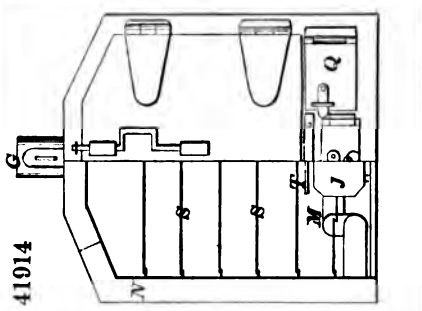

41910

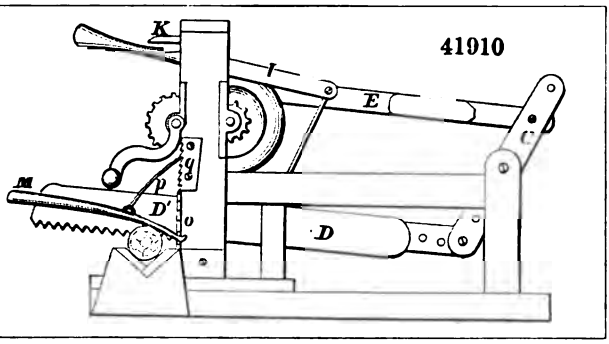

41911

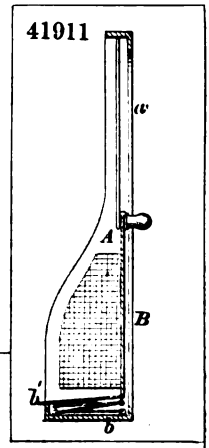

41912

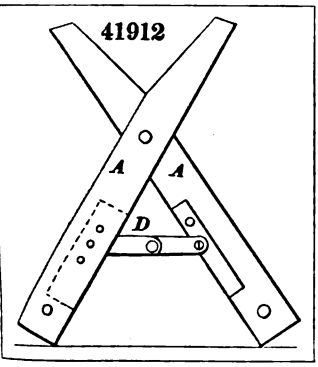

41915

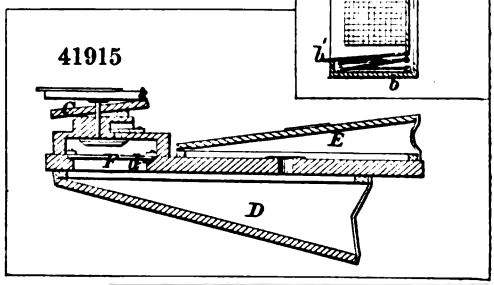

41913

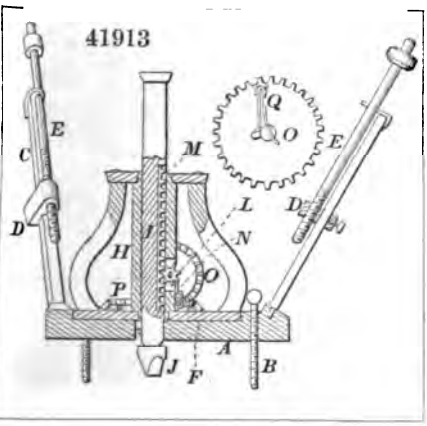

41916

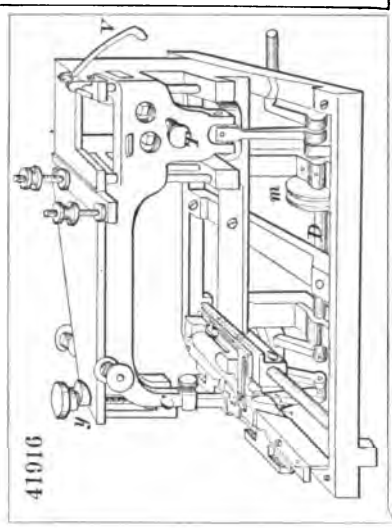

41917

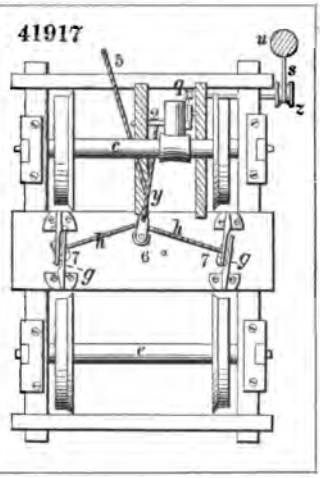

41921

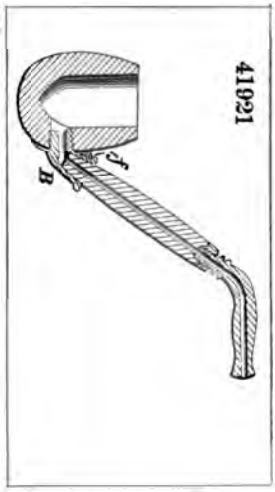

41925

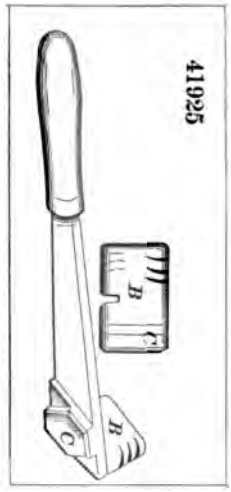

41918

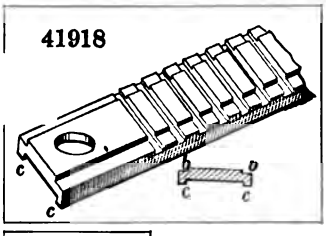

41922

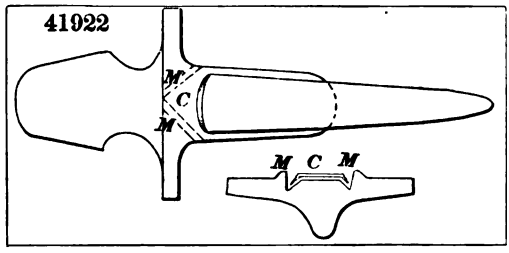

41923

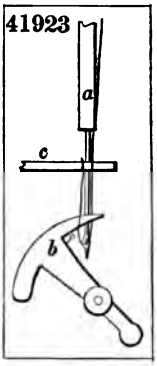

41924

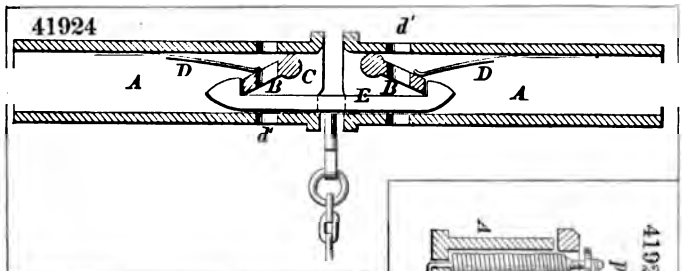

41919

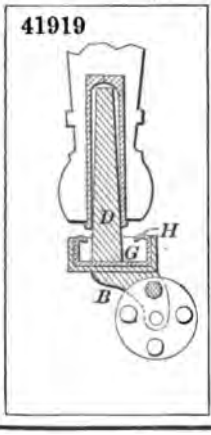

41926

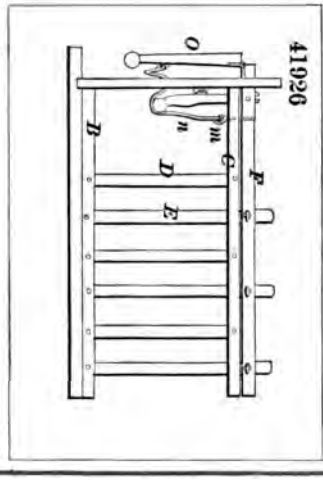

41927

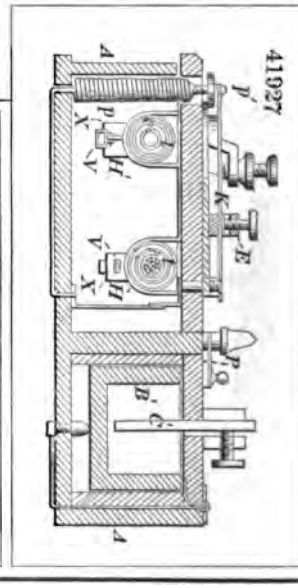

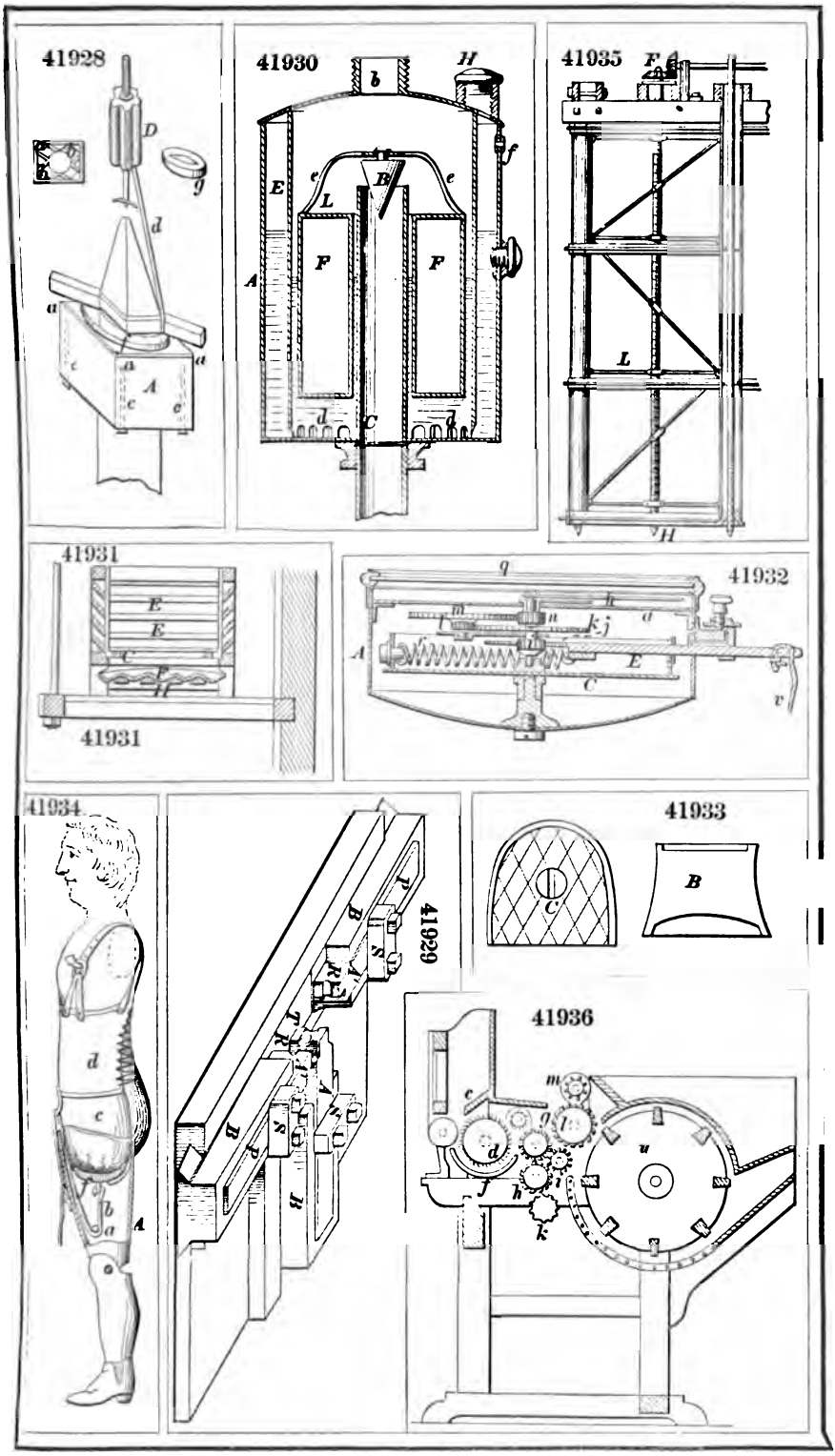
41928
41930
41935
41931
41932
41934
41929
41933
41936

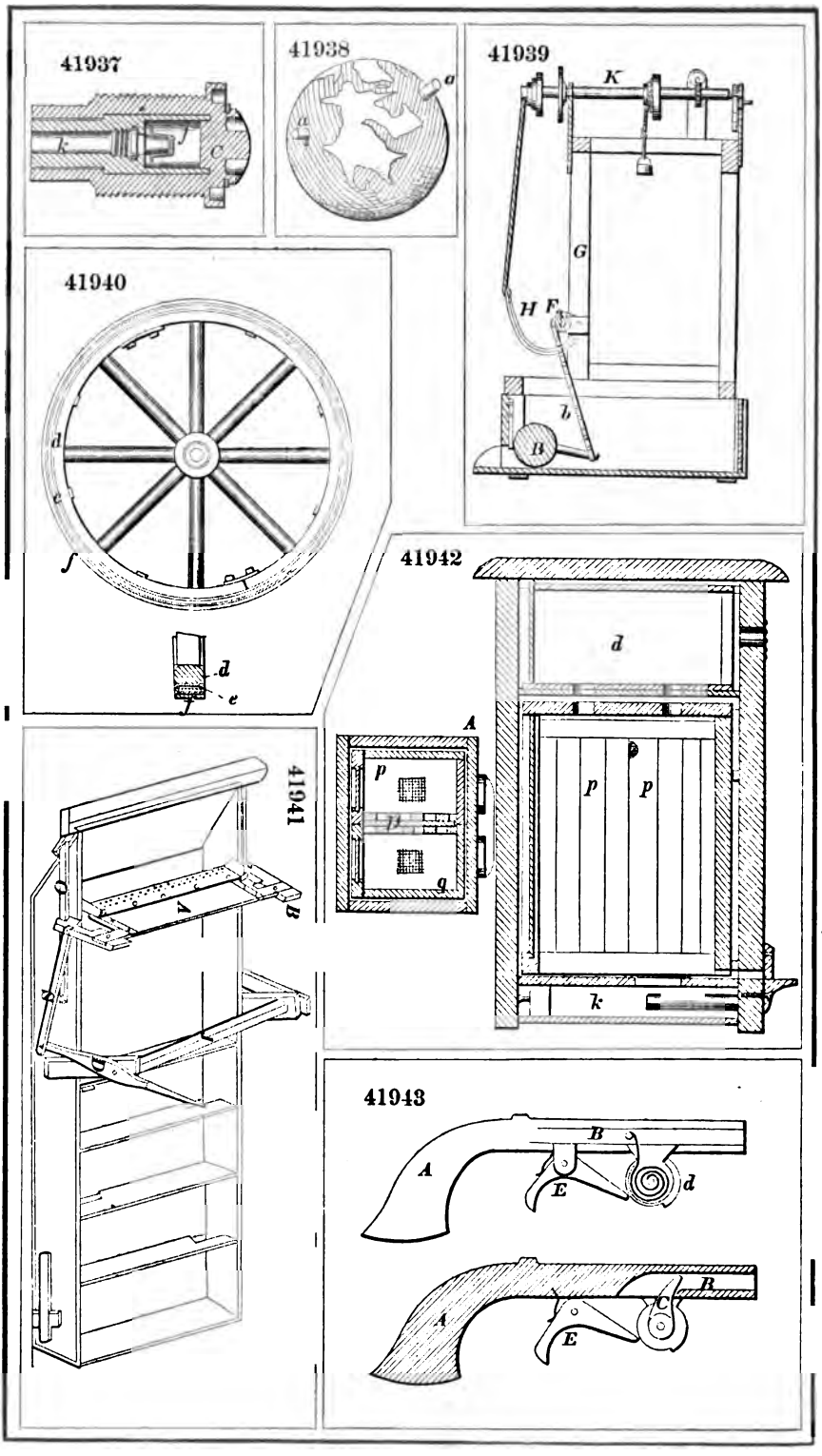
41937
k
f
C
41938
a
41939
K
G
H F
b
B
41940
d
e
f
d
e
41942
d
A
p
p
p
p
q
k
41941
A
B
41943
A
B
E
d
A
B
C
E

41944

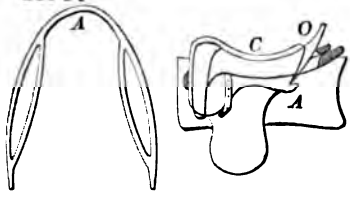

41946

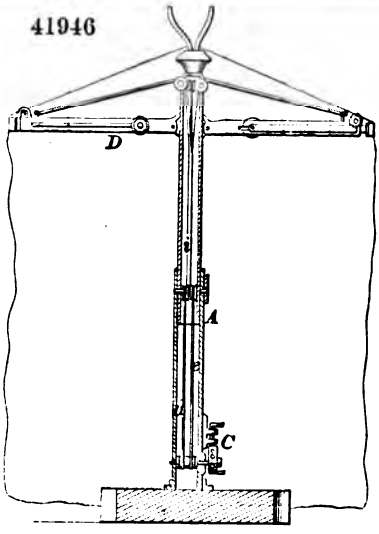

41948

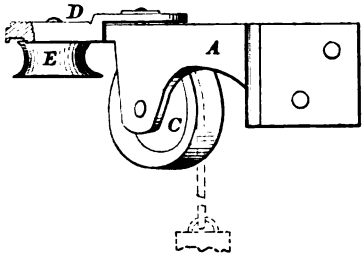

41947

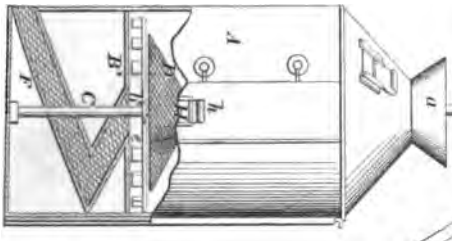

41950

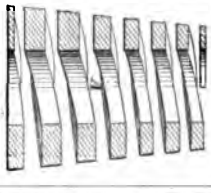

41951

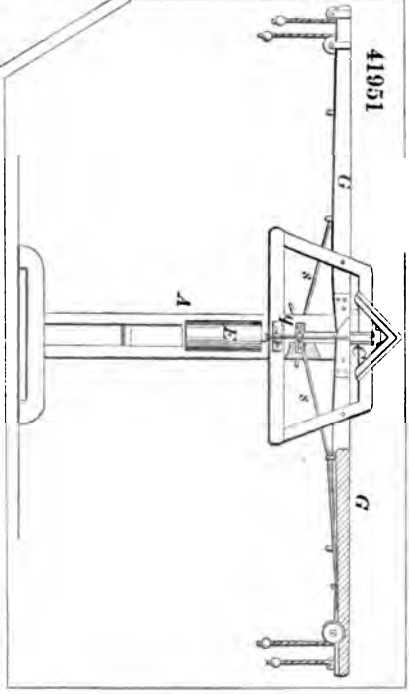

41945

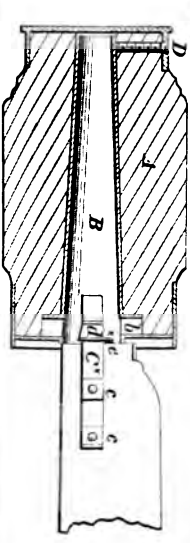

41949

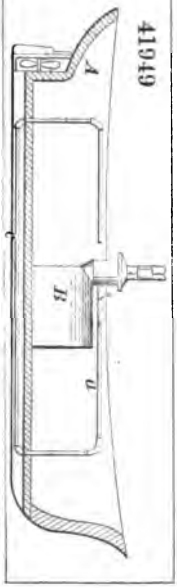

41952

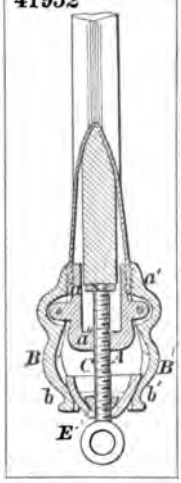

41953

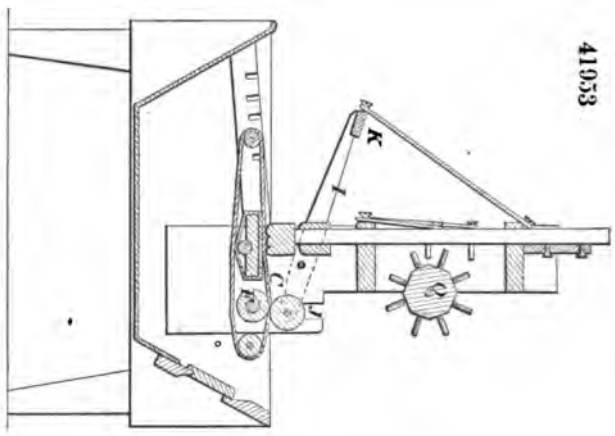

41956

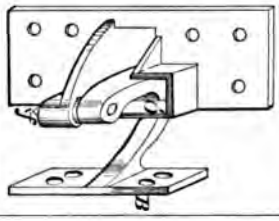

41954

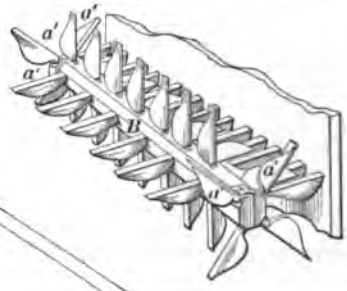

41955

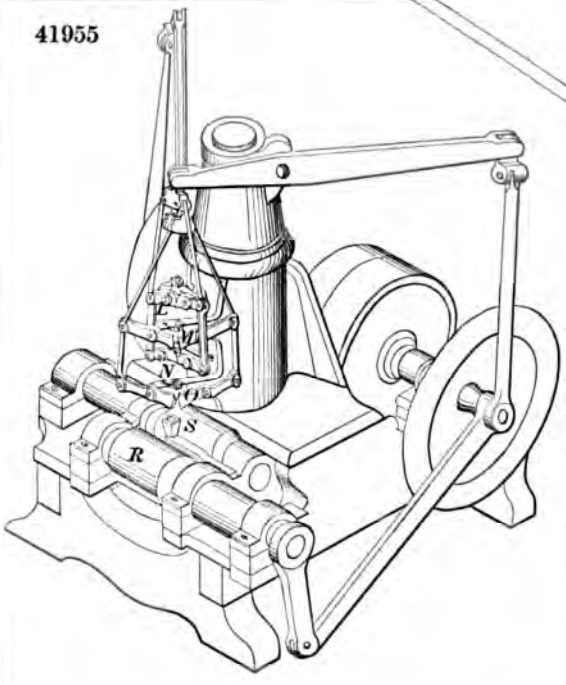

41957

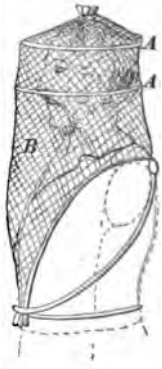

41958

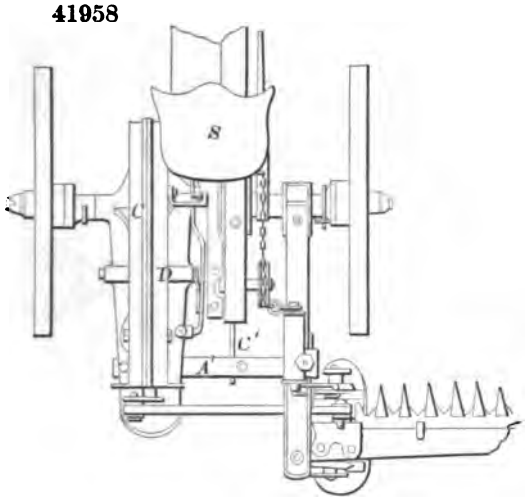

41960

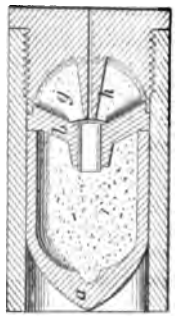

41961

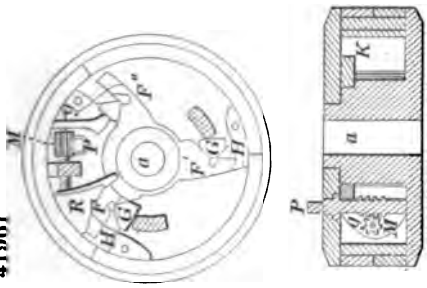

41959

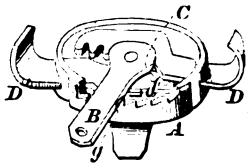

41962

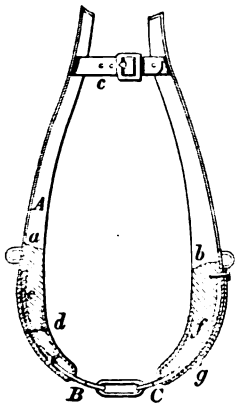

41963

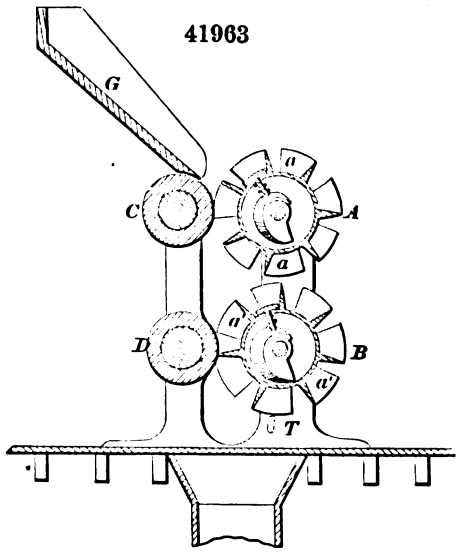

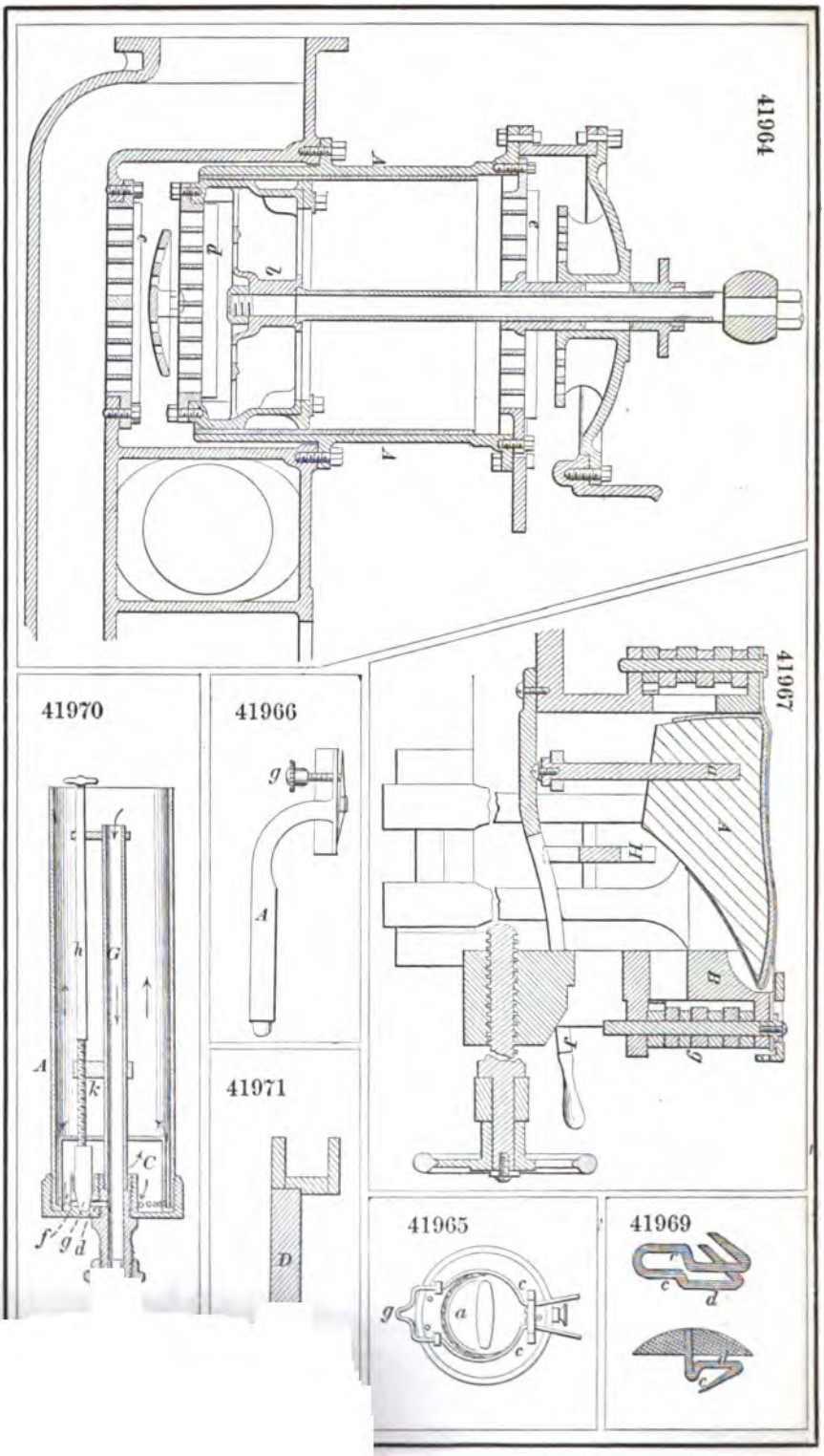
41964
41967
41970
41966
41971
41965
41969

41972

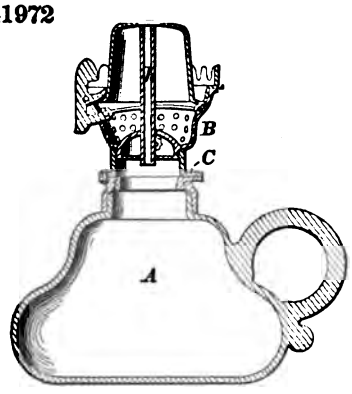

41975

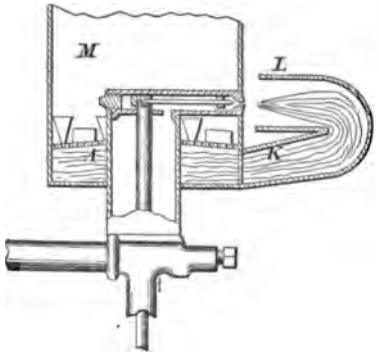

41974

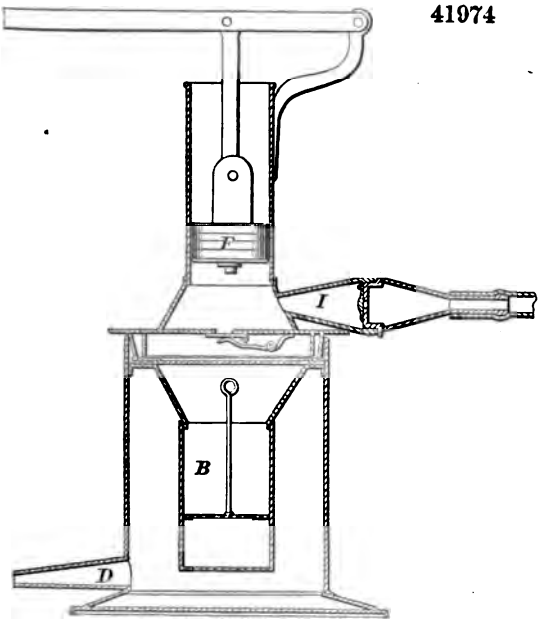

41973

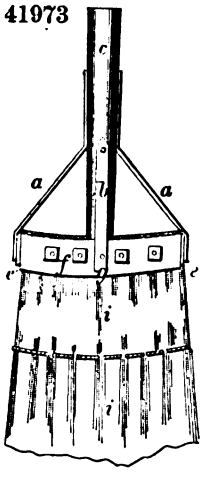

41981

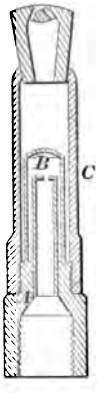

41977

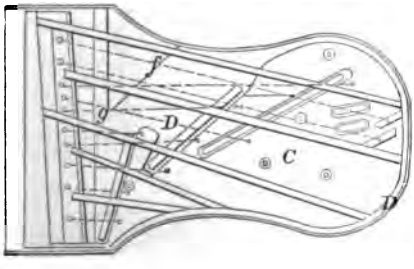

41976

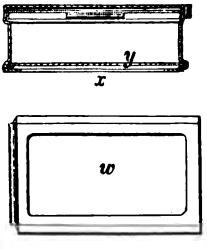

41983

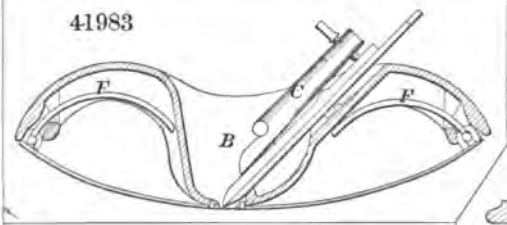

41986

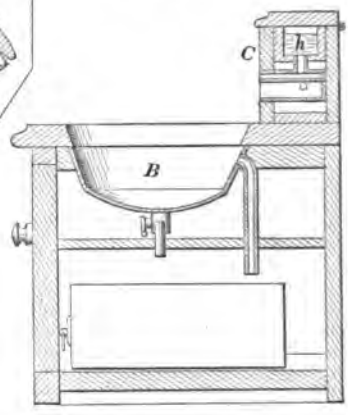

41985

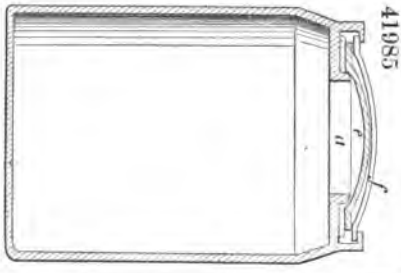

41984

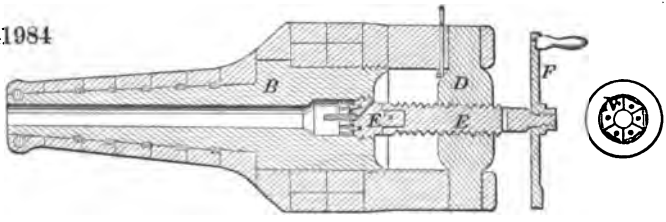

41987

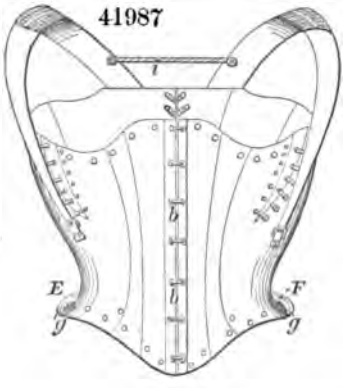

41989

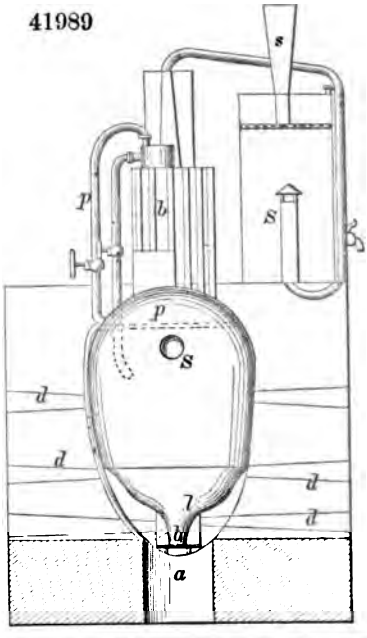

41988

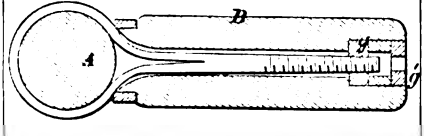

41990

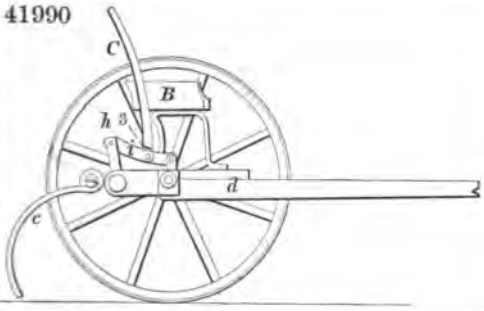

41991

41992

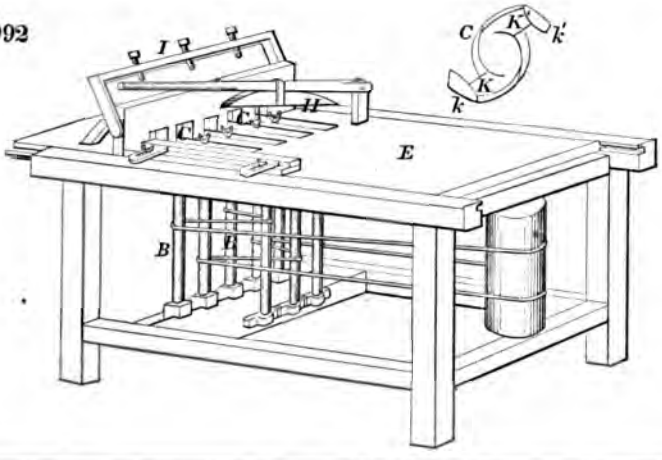

41993

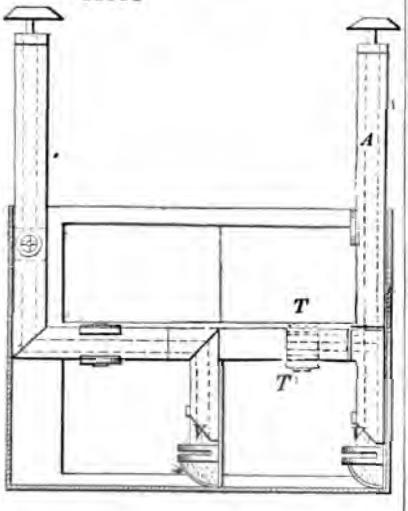

41994

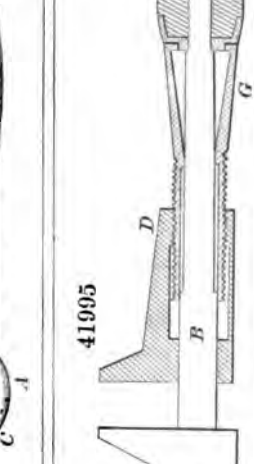

41995

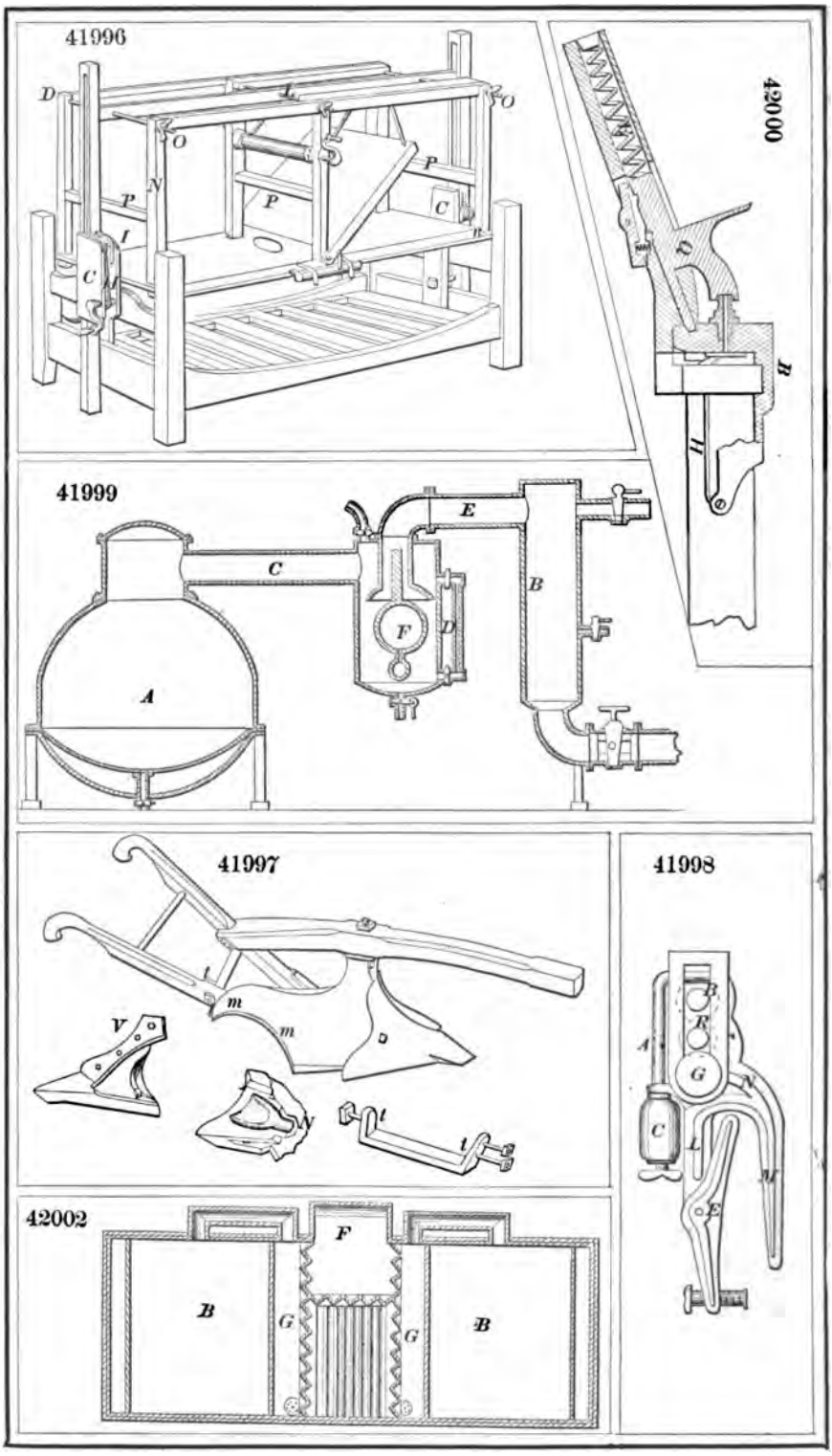
41996
D
L
O
O
P
N
P
P
C
n
I
C
M
42000
Q
B
H
41999
E
C
B
F
D
A
41997
l
m
m
V
D
W
t
t
41998
B
B
A
G
N
C
L
M
E
42002
F
B
G
G
B

42003

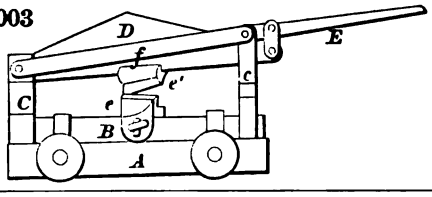

42005

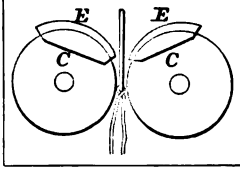

42004

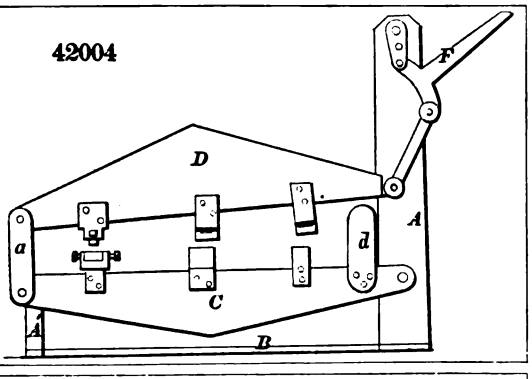

42008

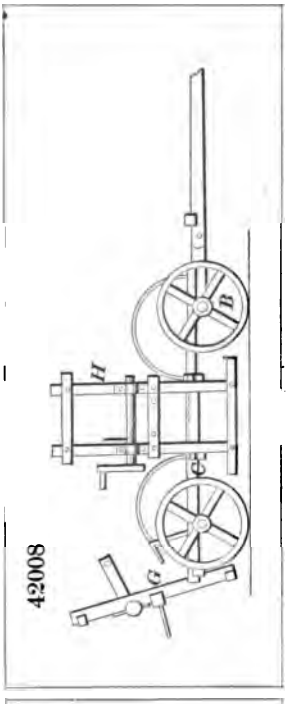

42007

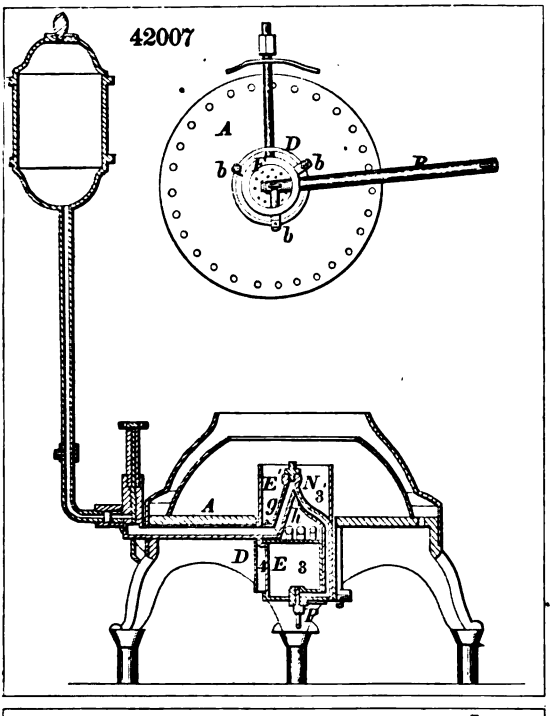

42010

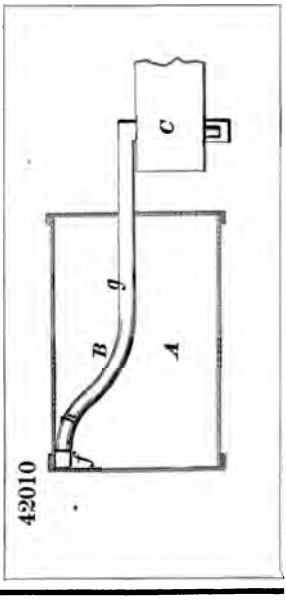

42009

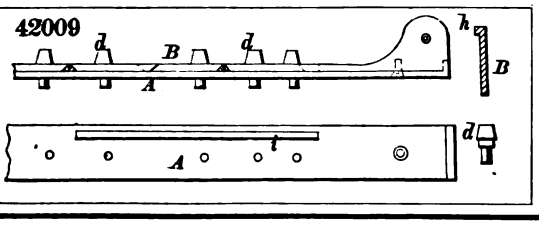

42011

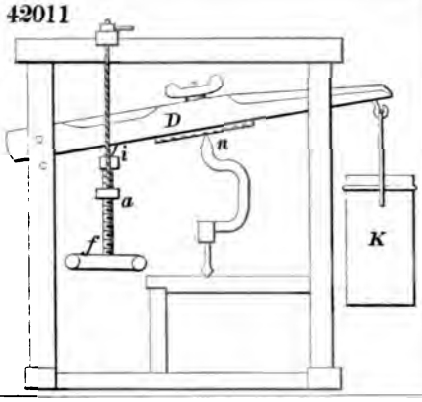

42013

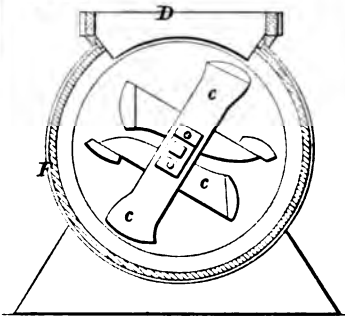

42014

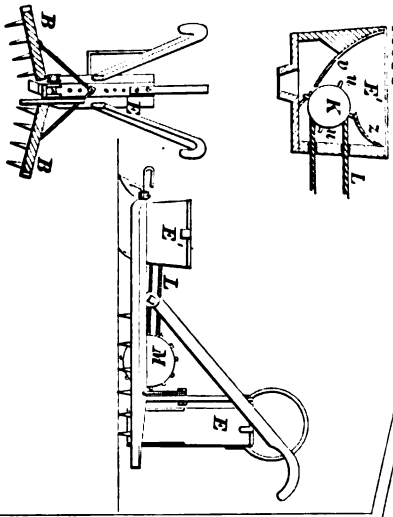

42016

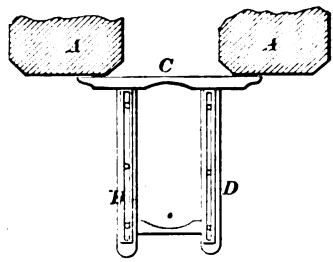

42012

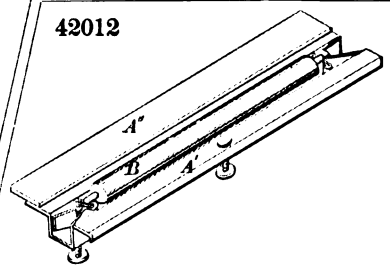

42015

42017

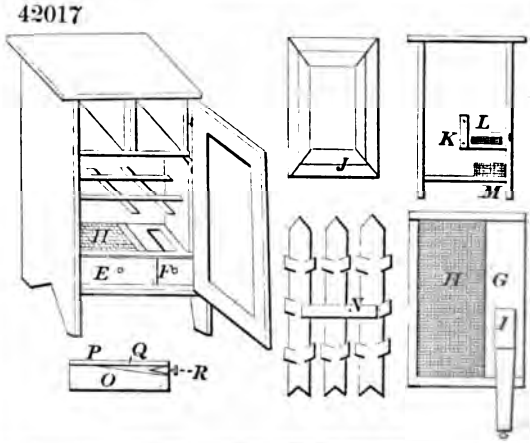

42018

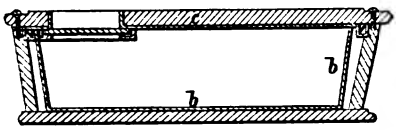

42019

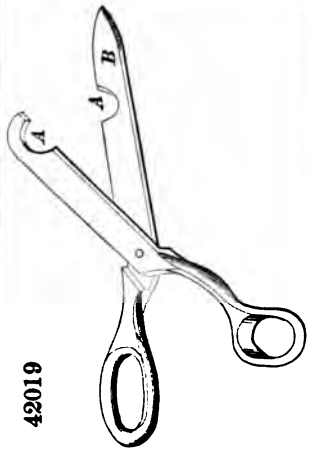

42022

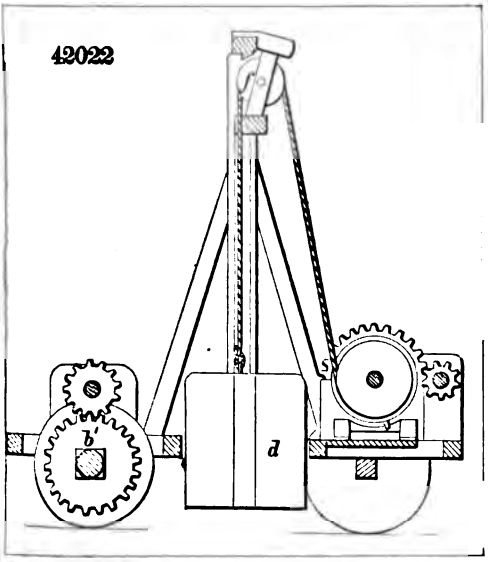

42021

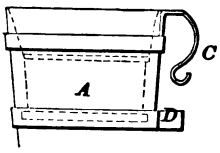

42020

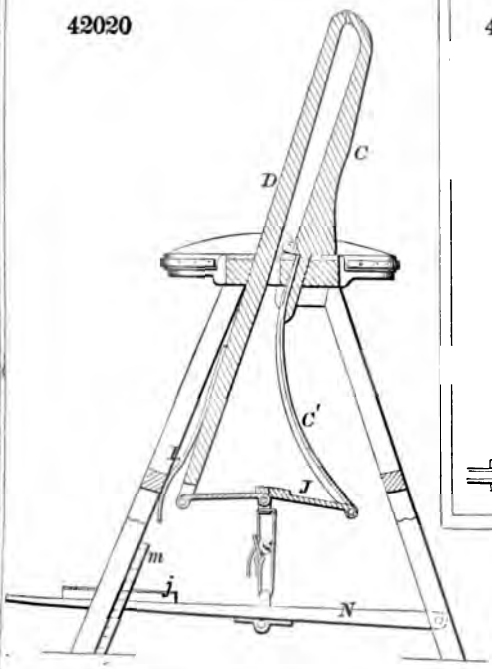

42023

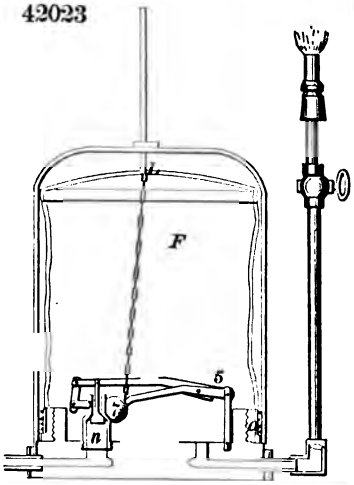

41937

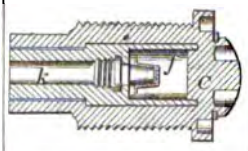

41938

41939

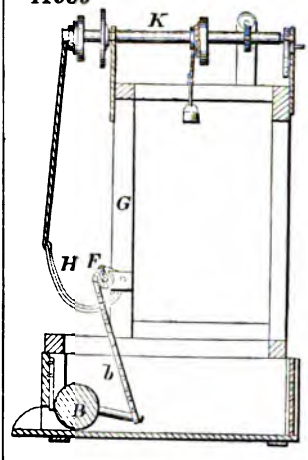

41940

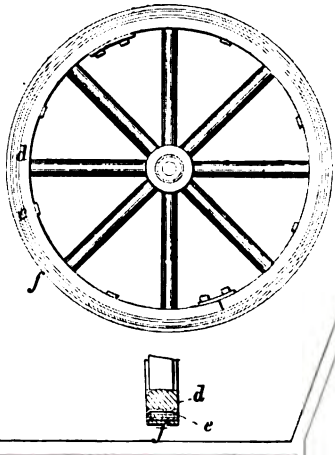

41941

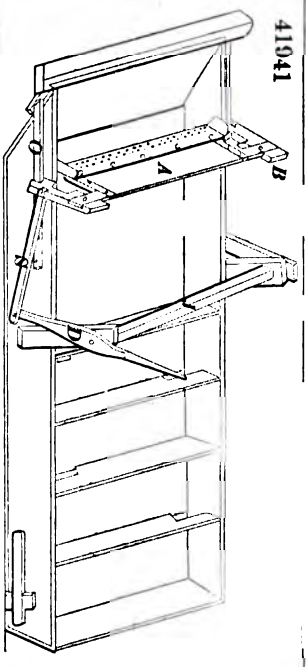

41942

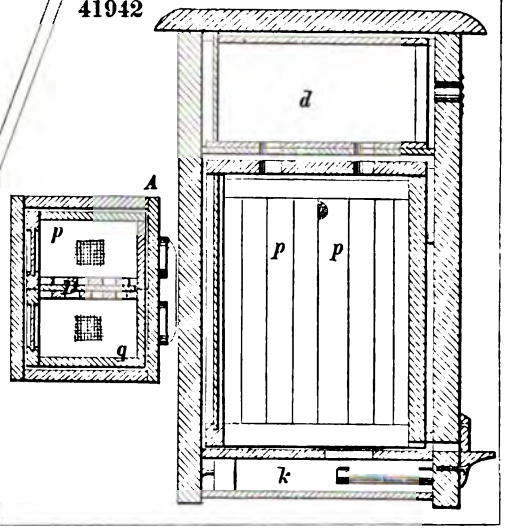

41943

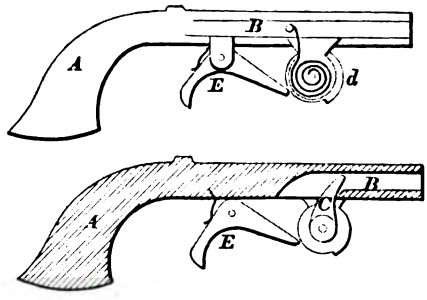

41944

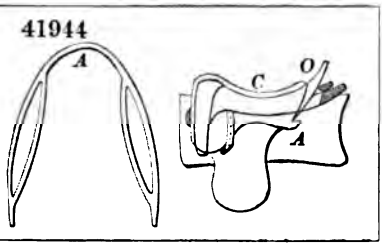

41946

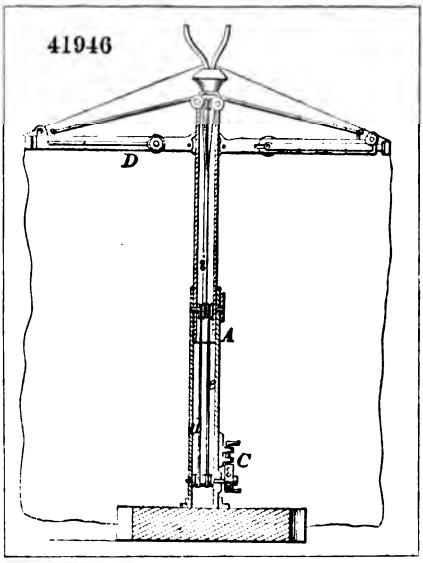

41948

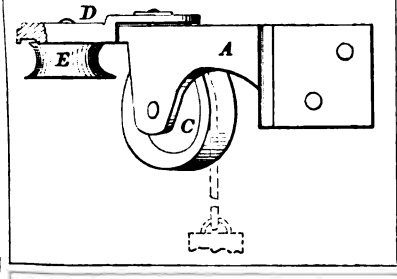

41947

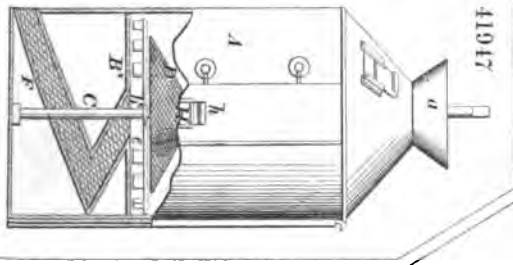

41950

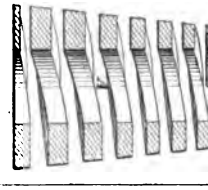

41951

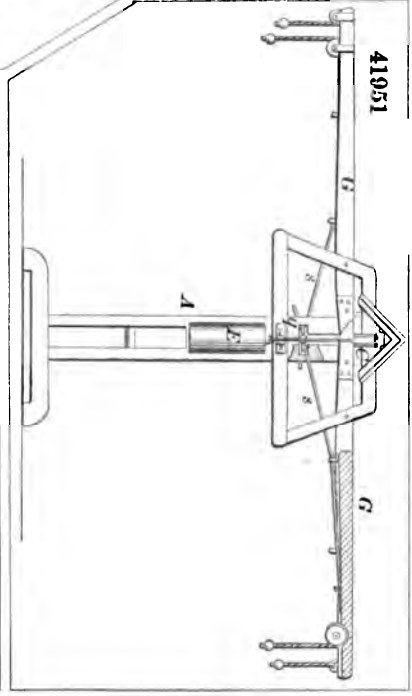

41945

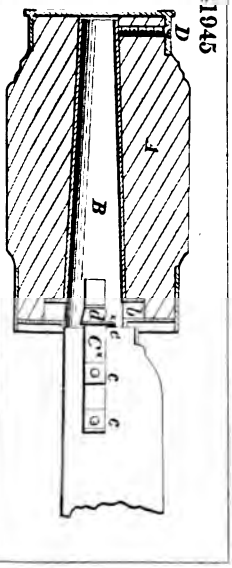

41949

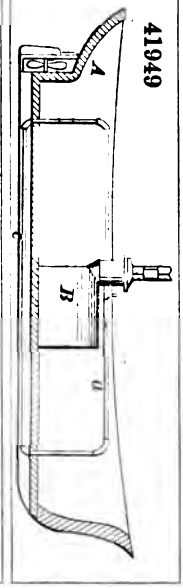

41952

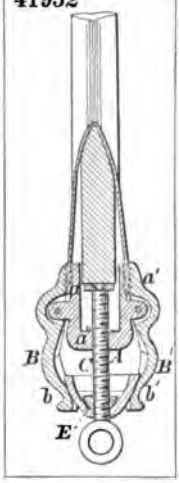

41953

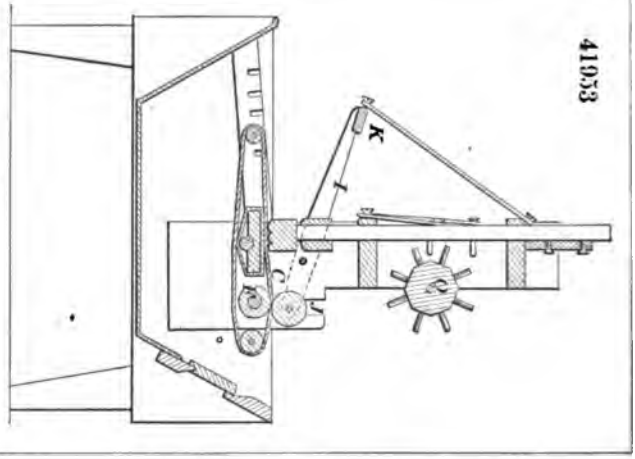

41956

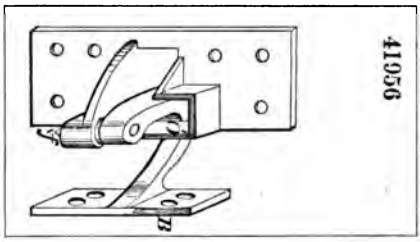

41954

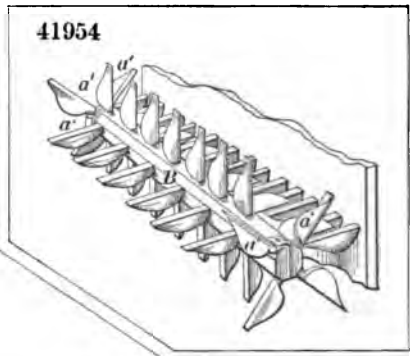

41955

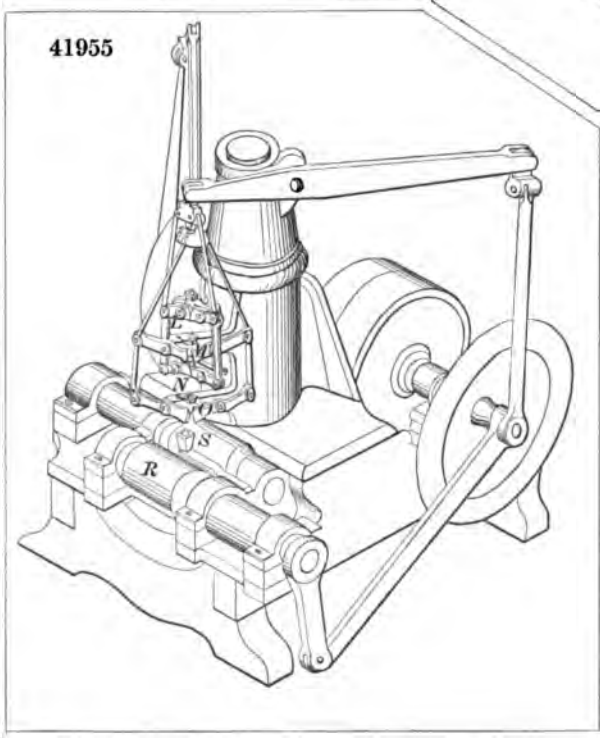

41957

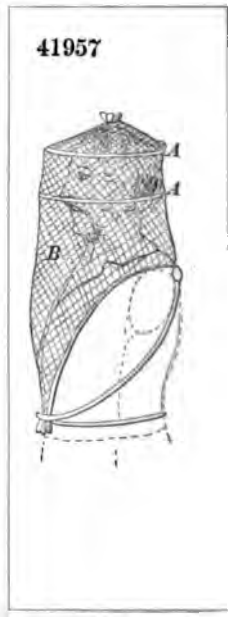

41958

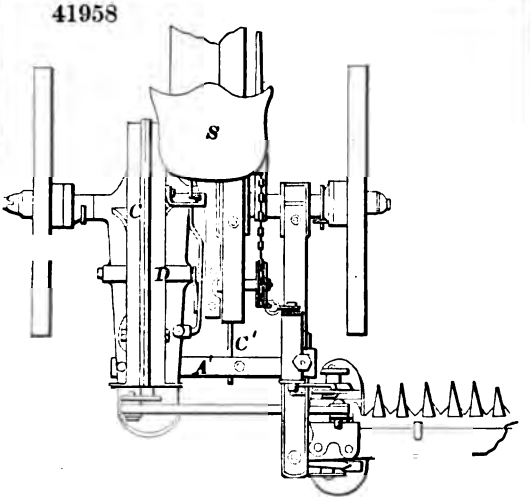

41960

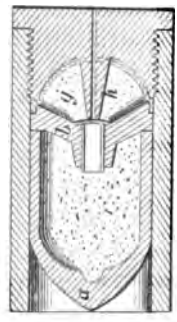

41961

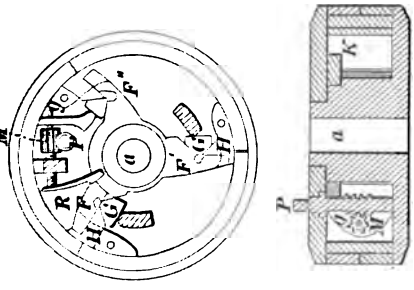

41959

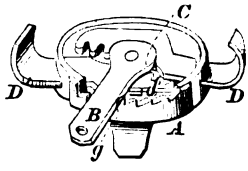

41962

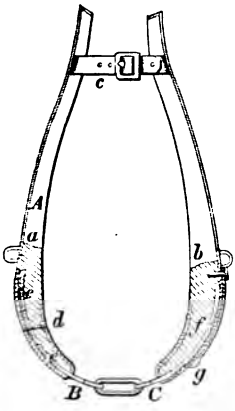

41963

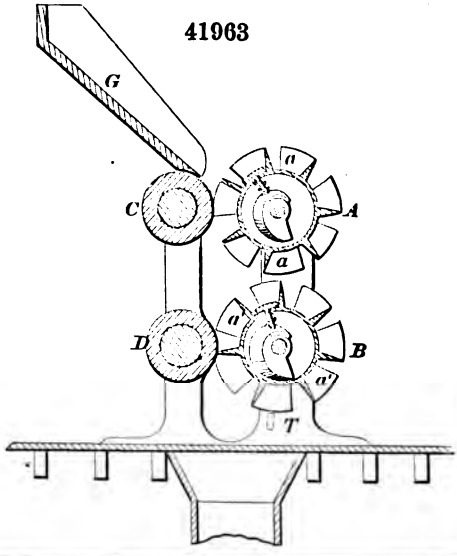

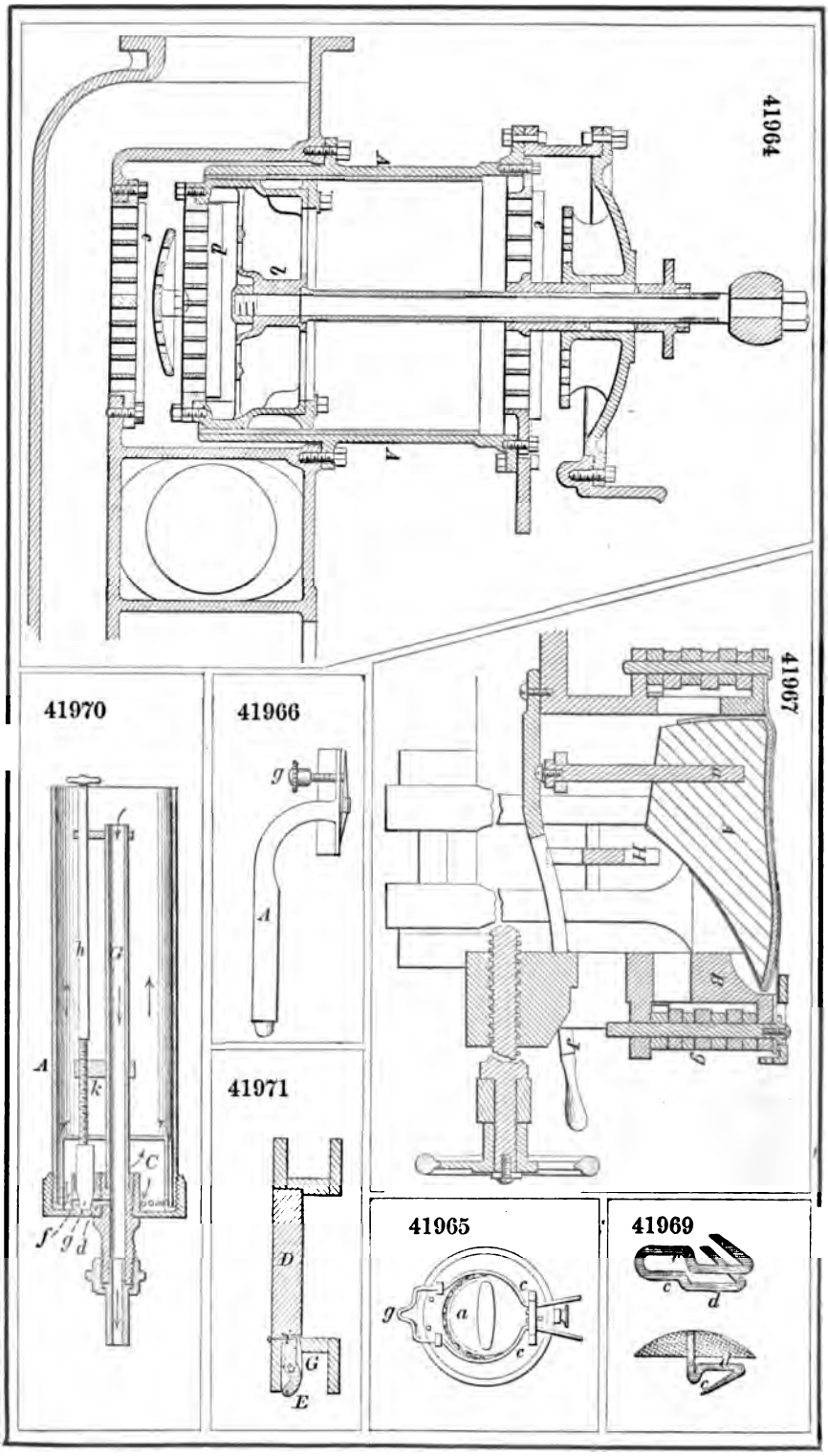
41964
41967
41970
41966
41971
41965
41969

41972

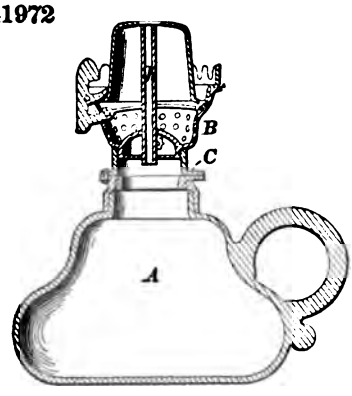

41975

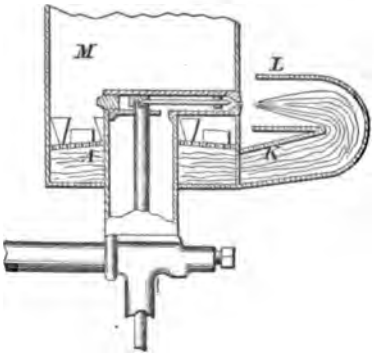

41974

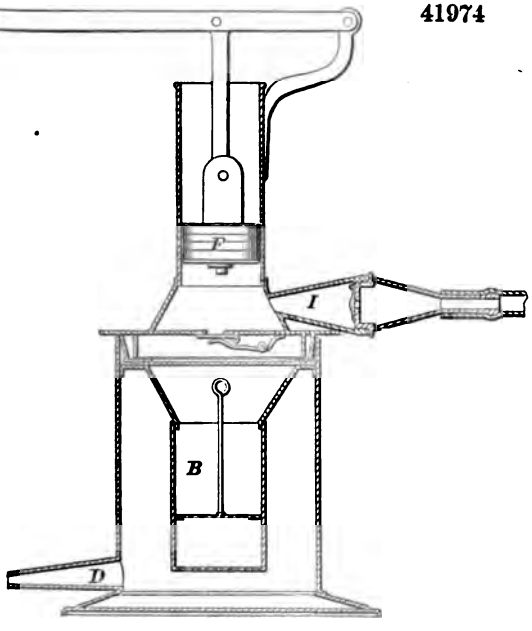

41973

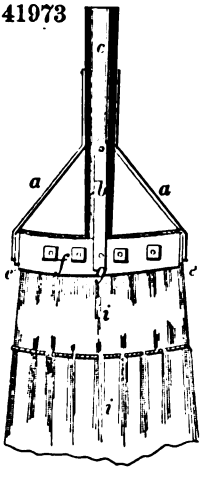

41981

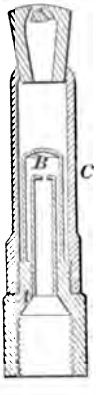

41977

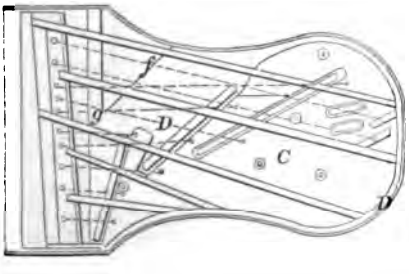

41976

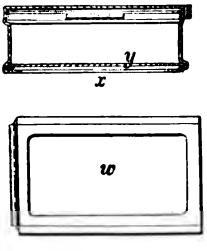

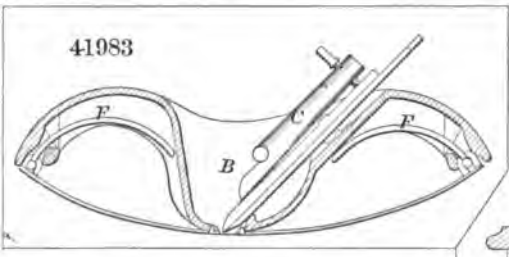
41983
F
C
F
B

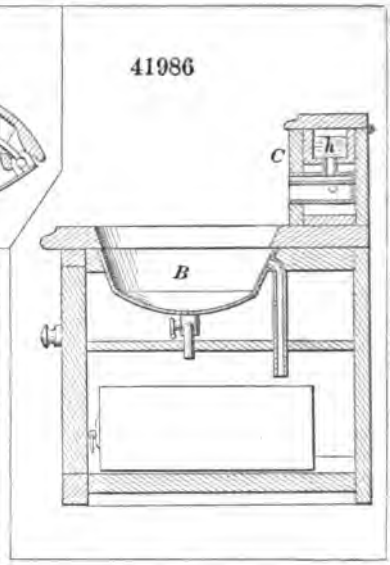
41986
C
k
B

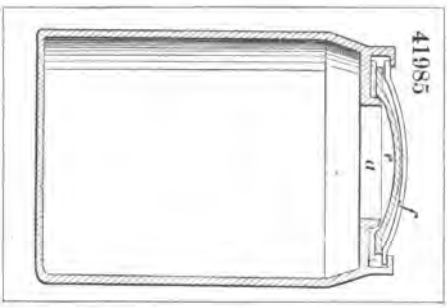
41985
a

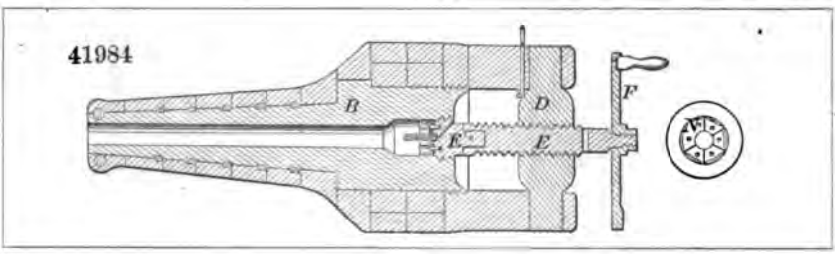
41984
B
D
F
E
E

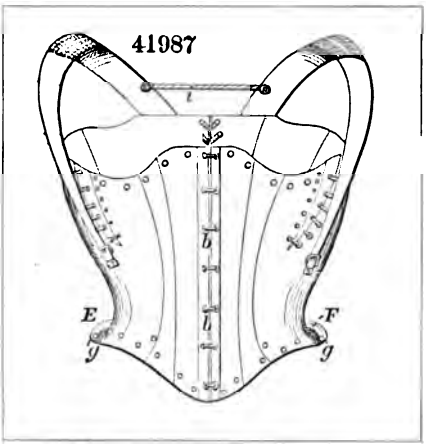
41987
i
b
b
E
F
g
g

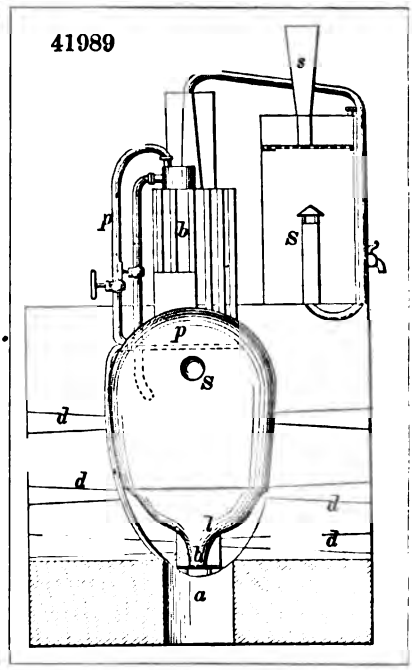
41989
s
p
b
s
p
s
d
d
d
d
l
a

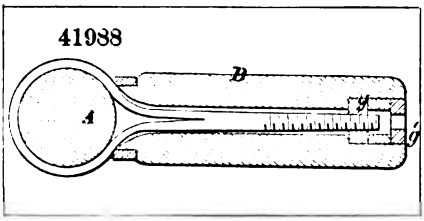
41988
B
A
g
g

41990

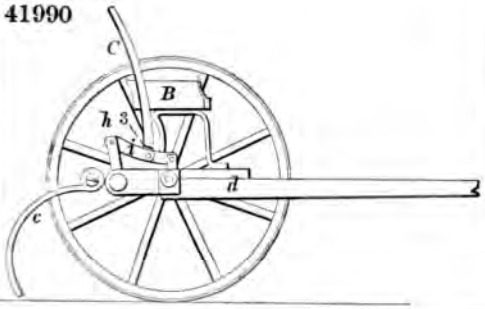

41991

41992

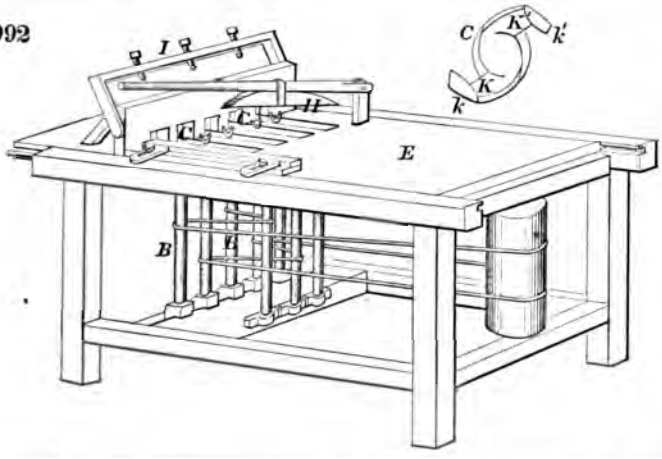

41993

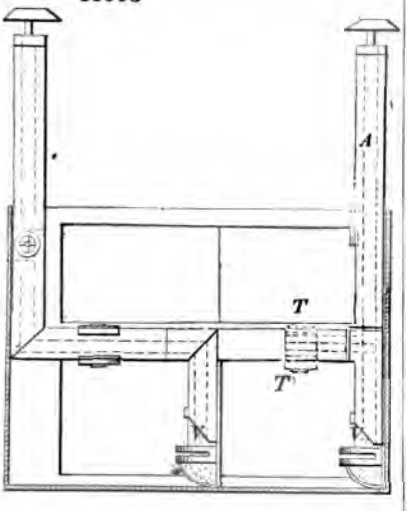

41994

41995

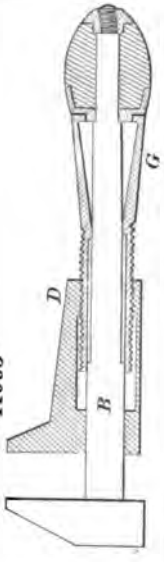

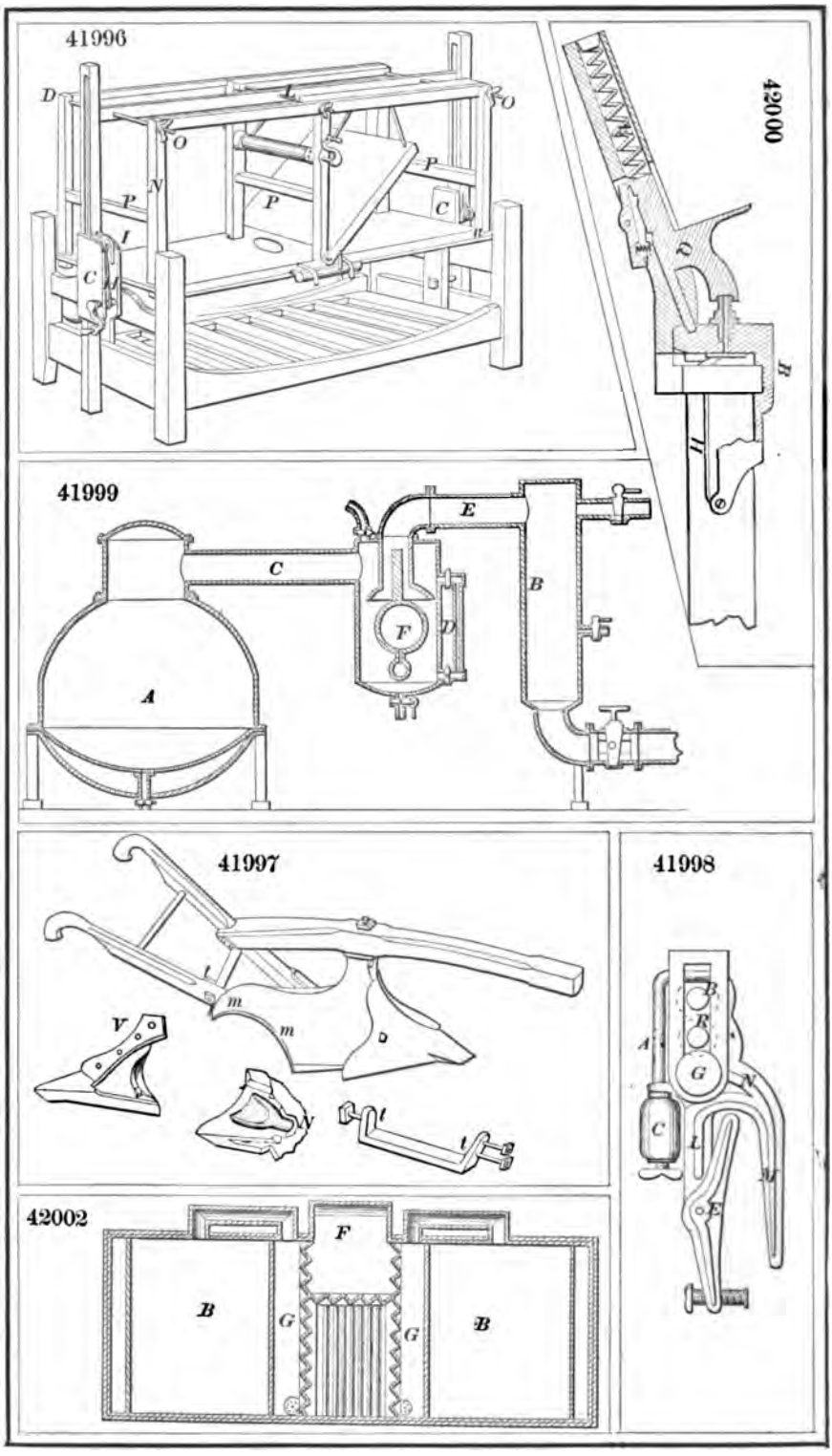
41996
D
L
O
O
P
N
P
P
C
I
C
M
A
42000
G
H
H
41999
E
C
B
F
D
A
41997
t
m
m
V
N
t
t
41998
B
B
A
G
N
C
L
M
E
42002
F
B
G
G
B

42003

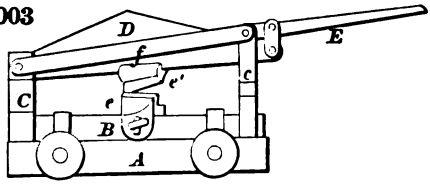

42005

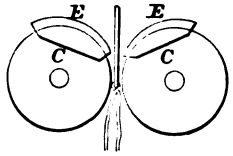

42004

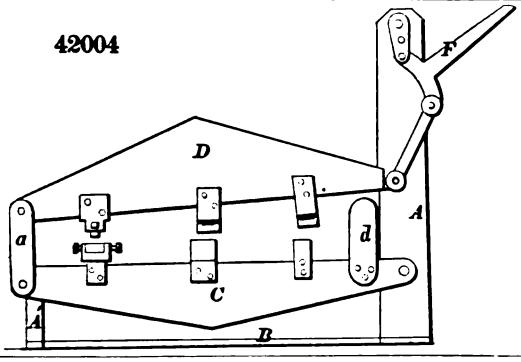

42008

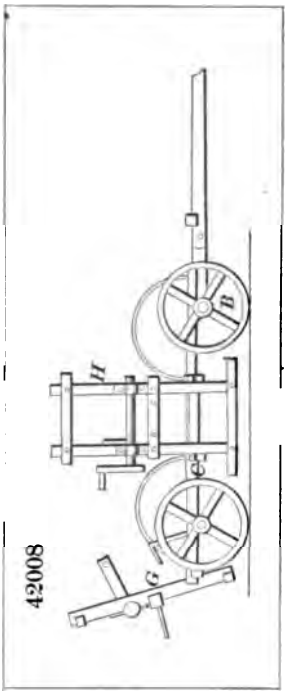

42007

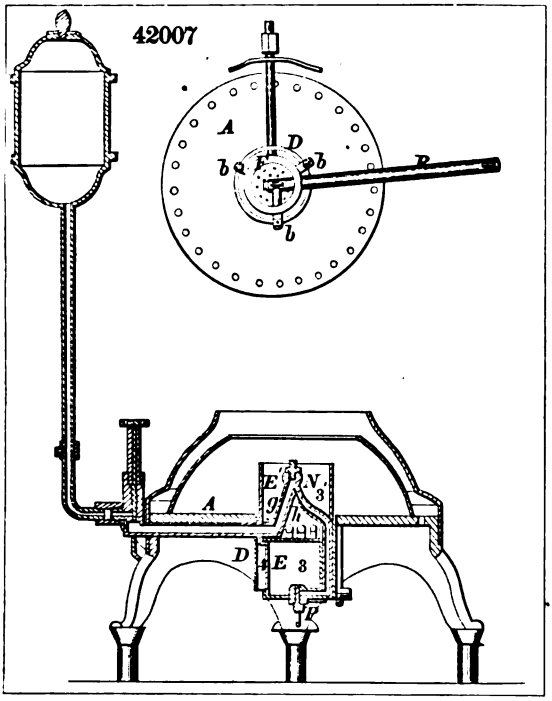

42010

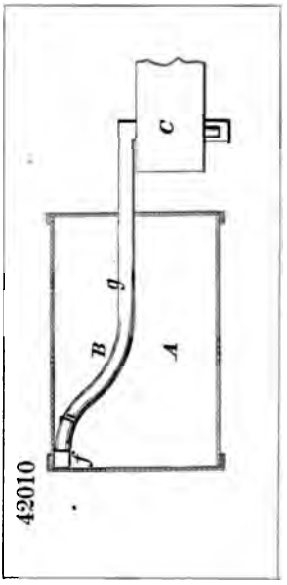

42009

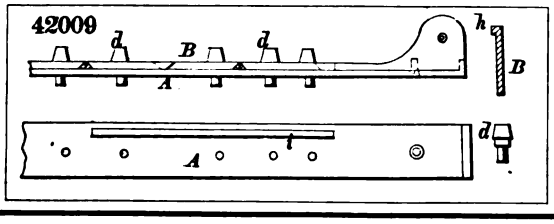

42011

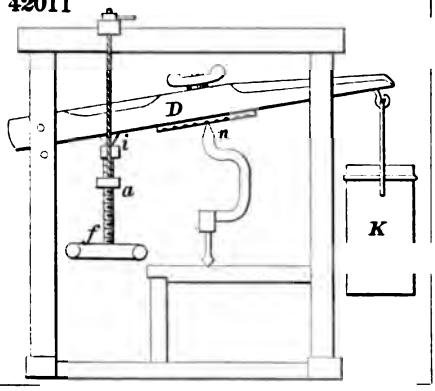

42013

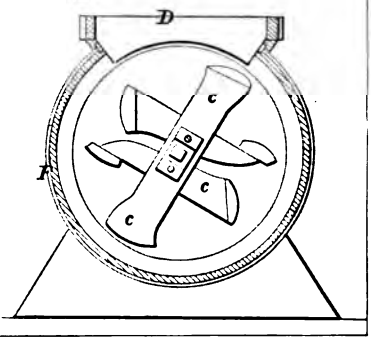

42014

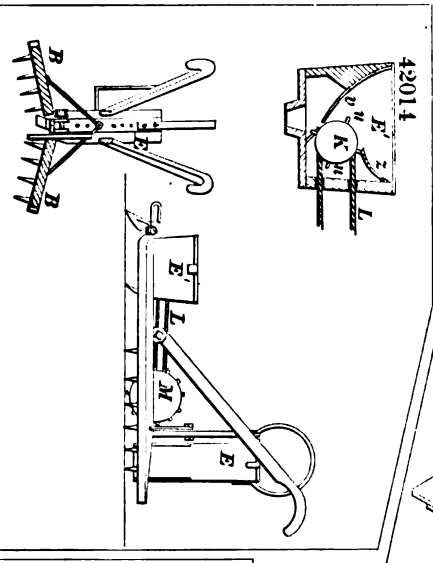

42016

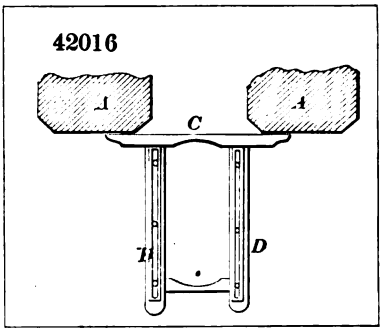

42012

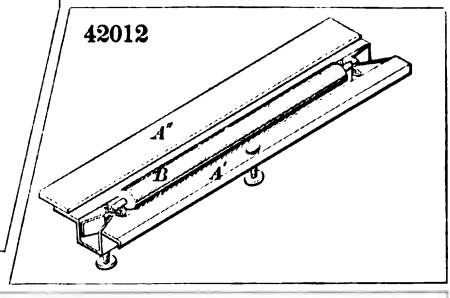

42015

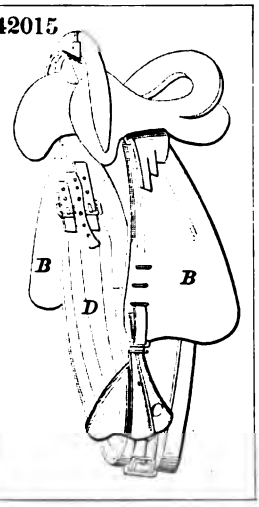

42017

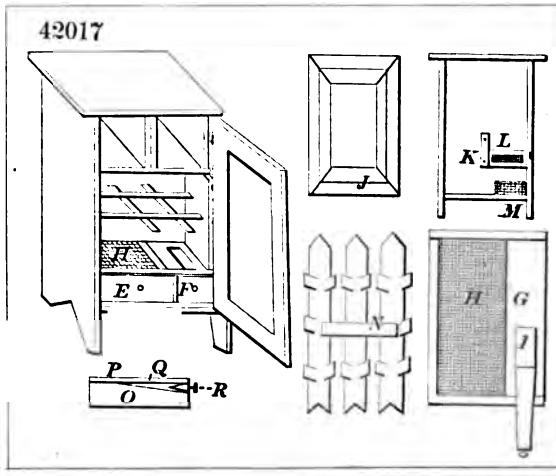

42018

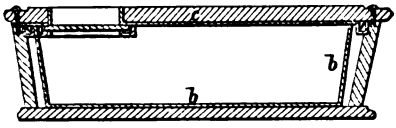

42019

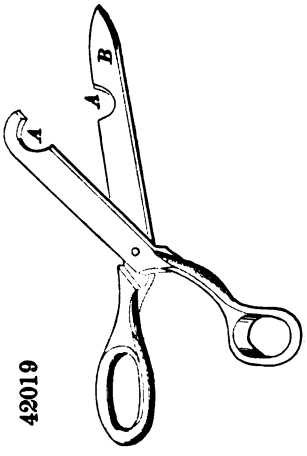

42022

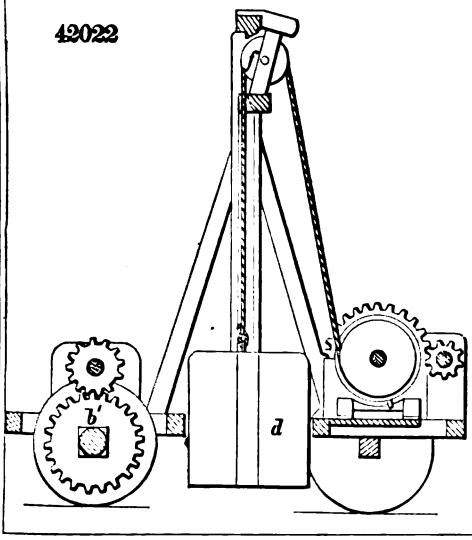

42021

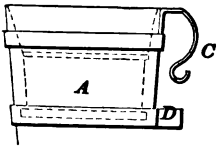

42020

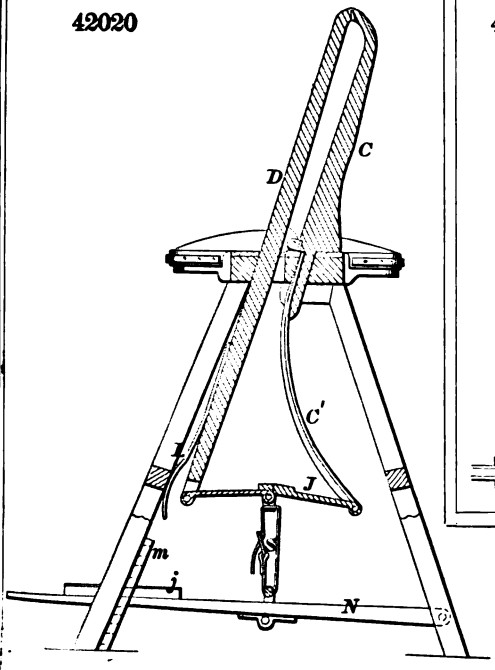

42023

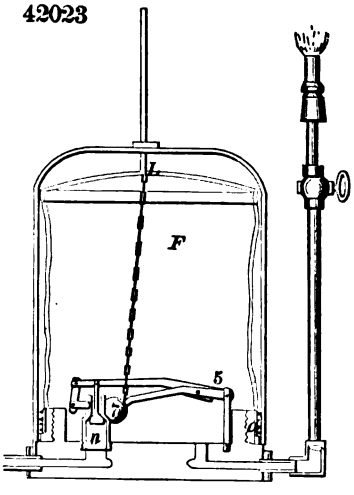

42024

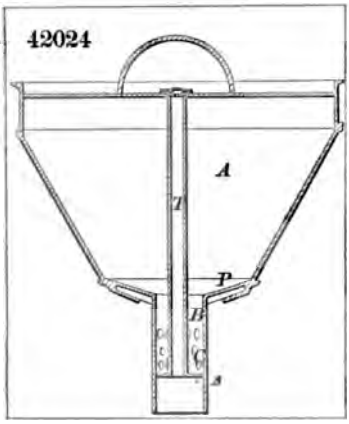

42029

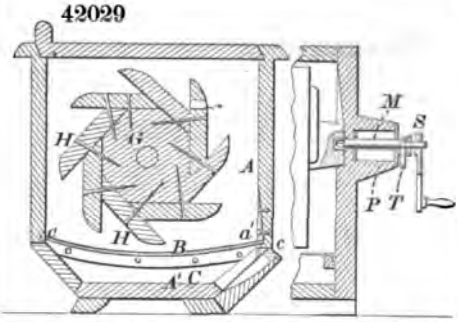

42028

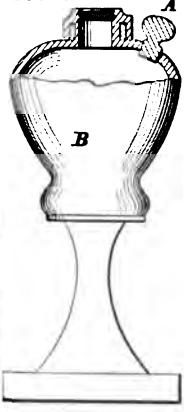

42032

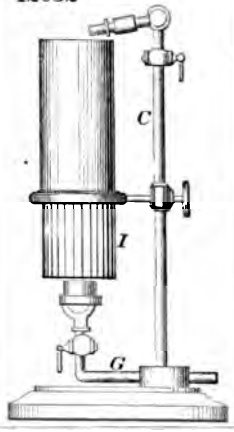

42027

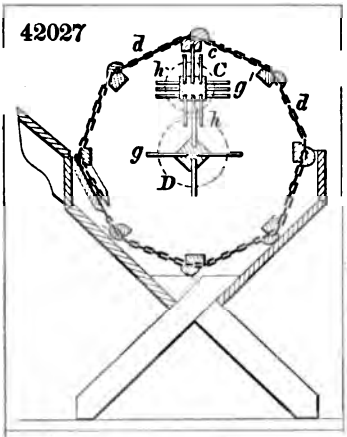

42031

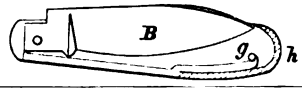

42030

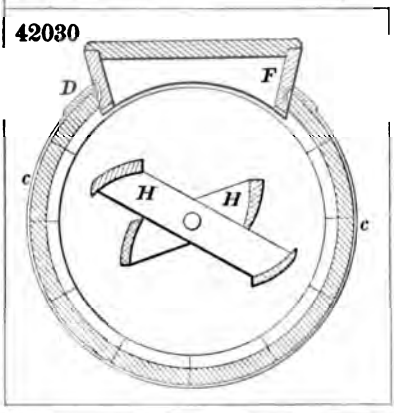

42034

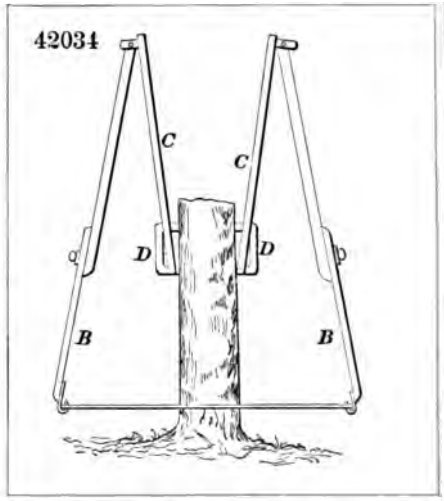

42033

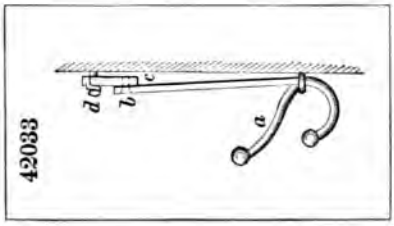

42035

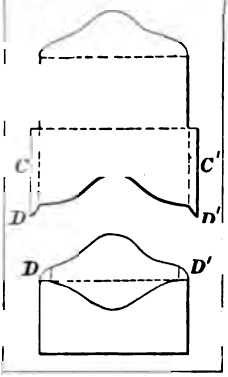

42039

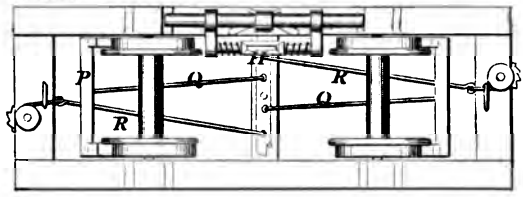

42041

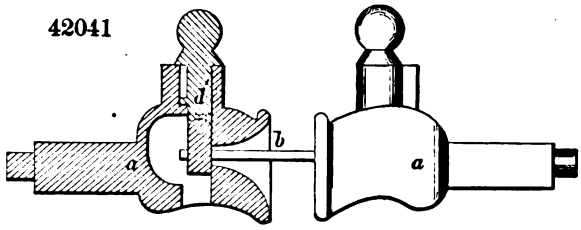

42036

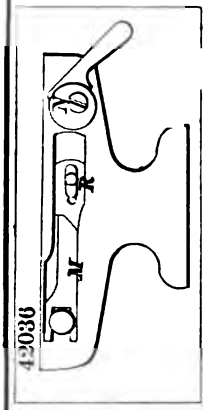

42038

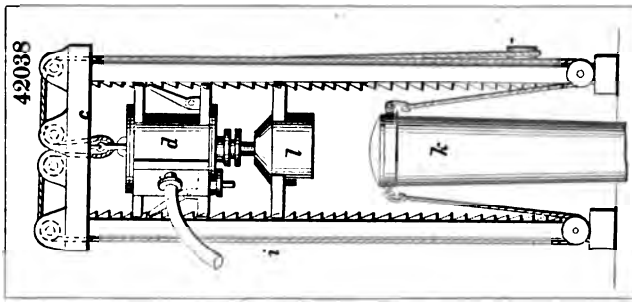

42040

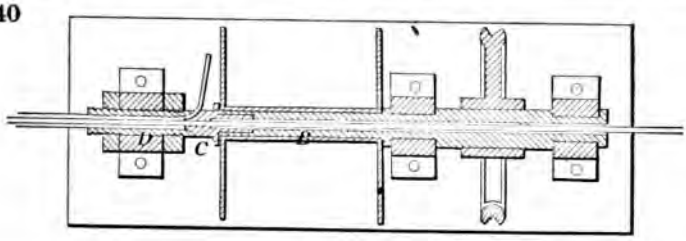

42037

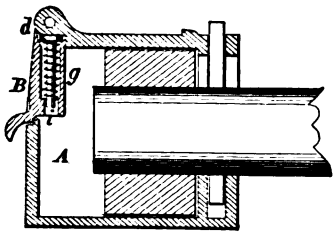

42042

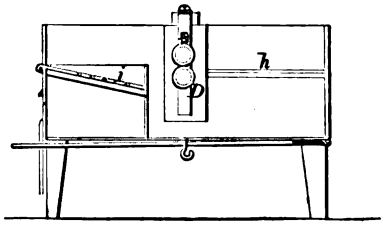

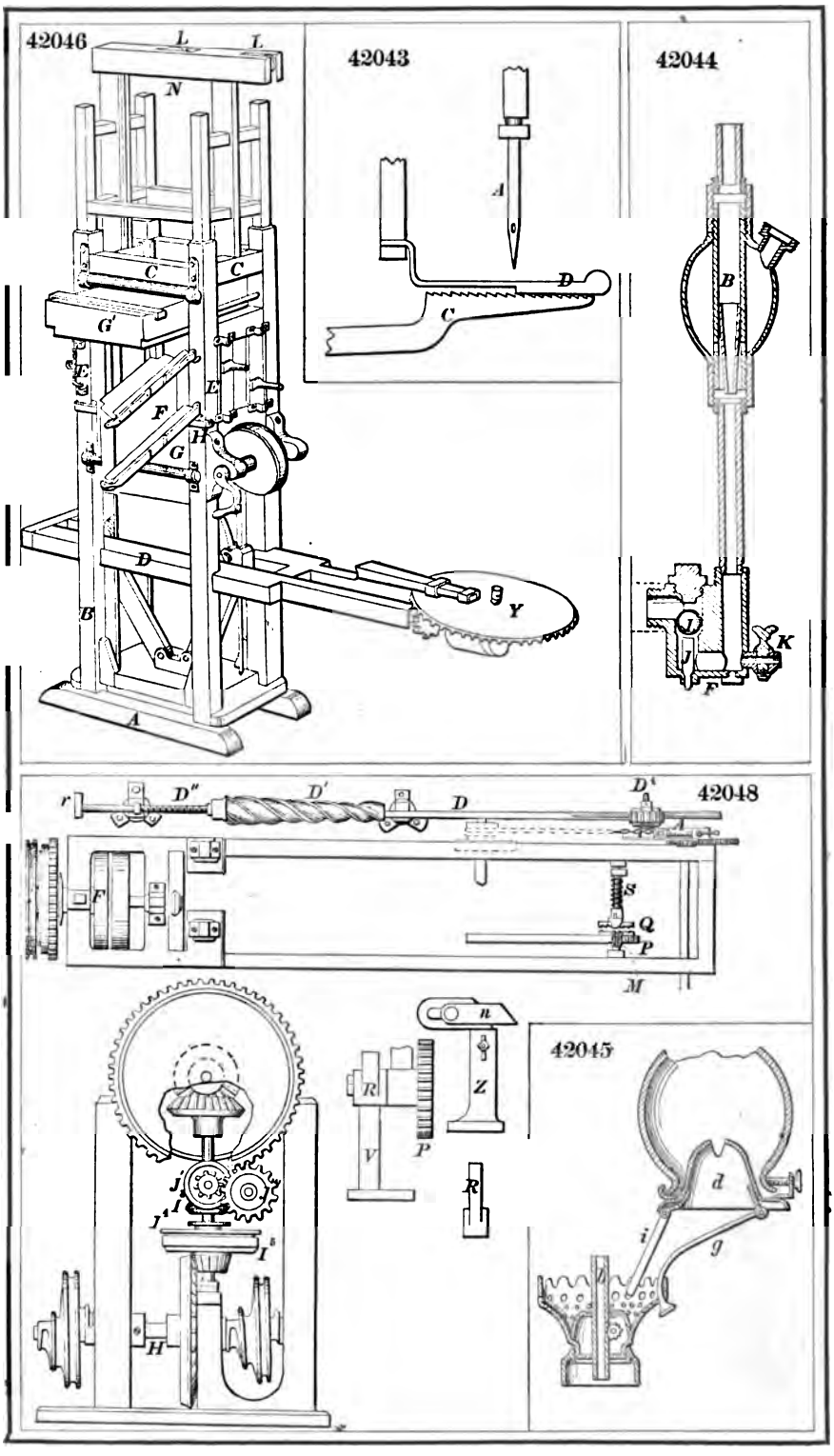
42046
L
L
N
C
C
G'
E
E'
F
H
G
D
B
Y
A
42043
A
D
C
42044
B
J
K
F
42048
r
D''
D'
D
D'
A
F
S
Q
P
M
n
R
Z
V
P
R
42045
d
i
g
J
I
J'
I'
H

42049

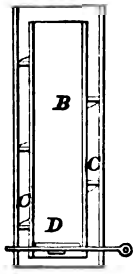

42052

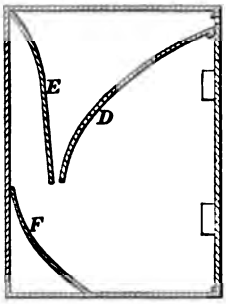

42054

42050

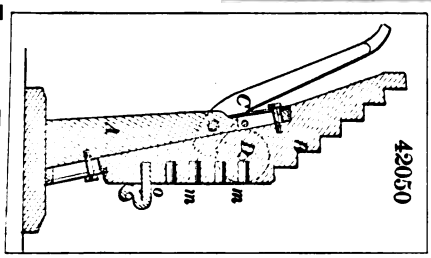

42051

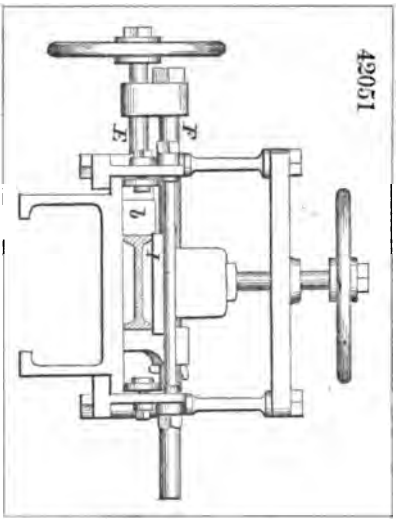

42053

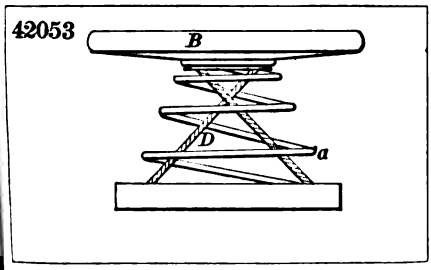

42055

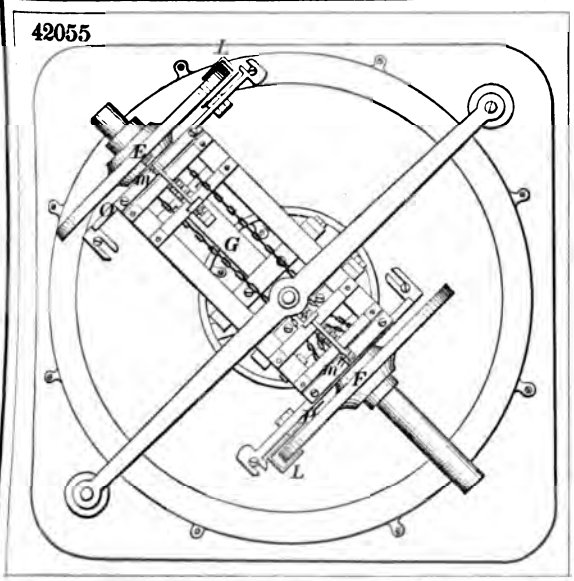

42058

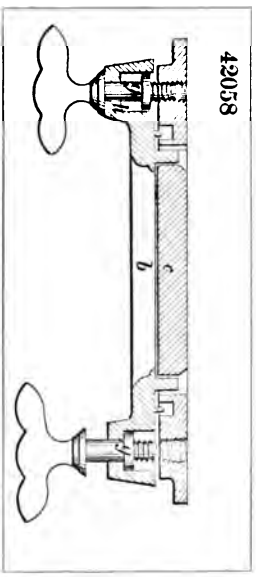

42059

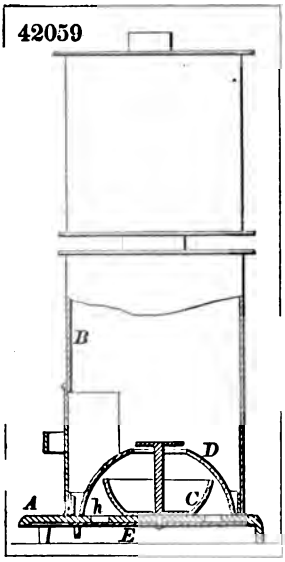

42065

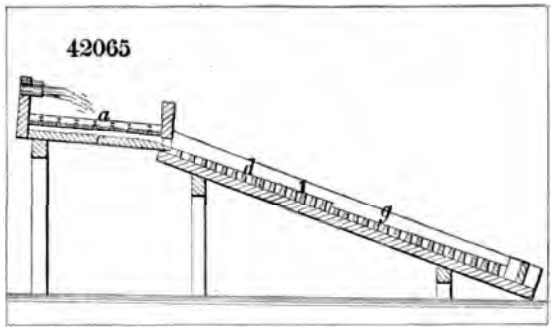

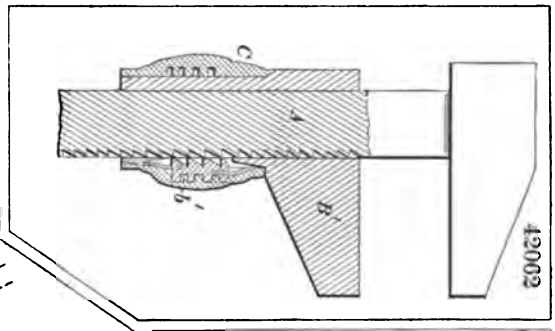

42060

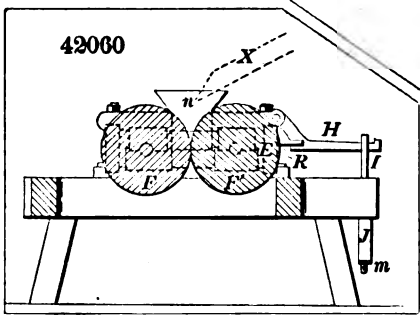

42063

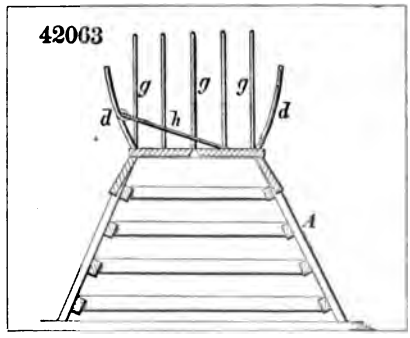

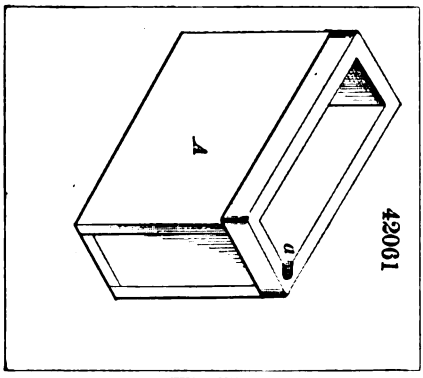

42066

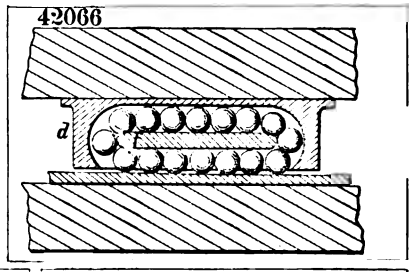

42064

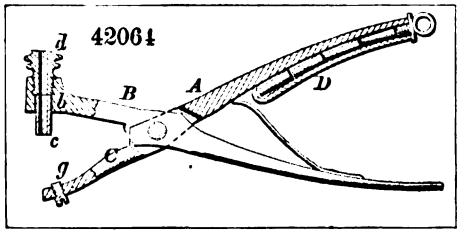

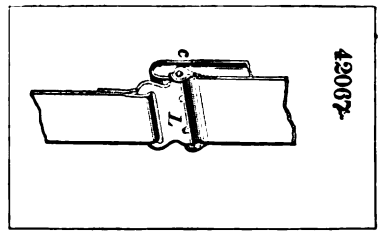

42068

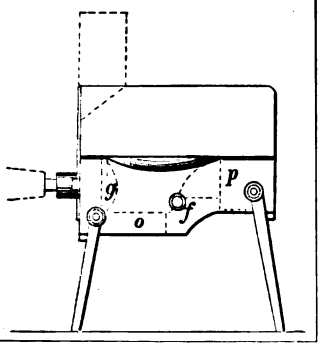

42070

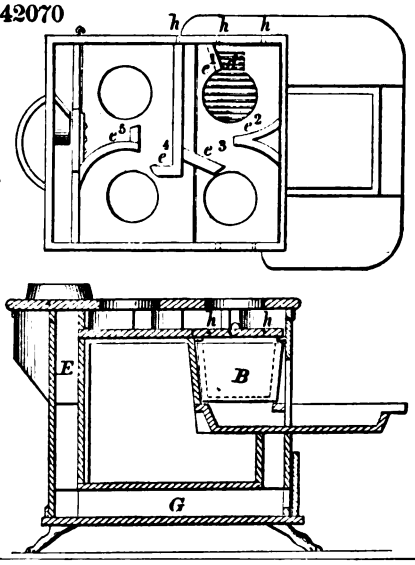

42069

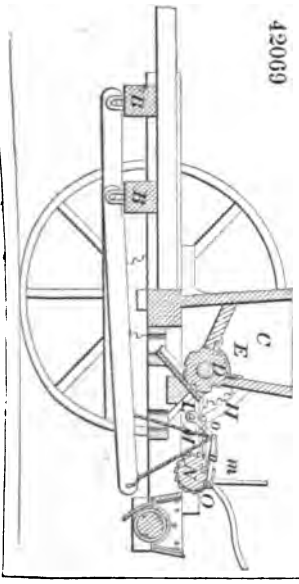

42072

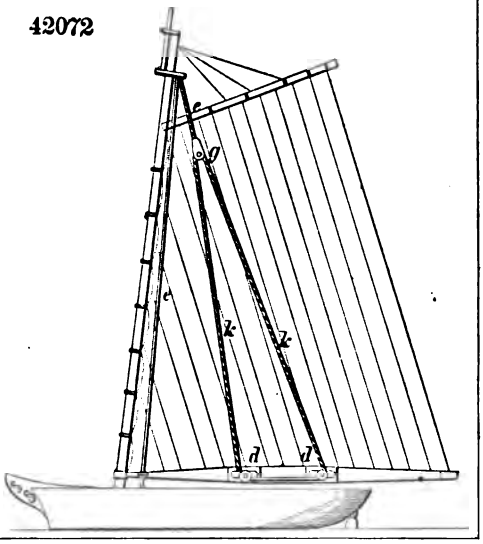

42071

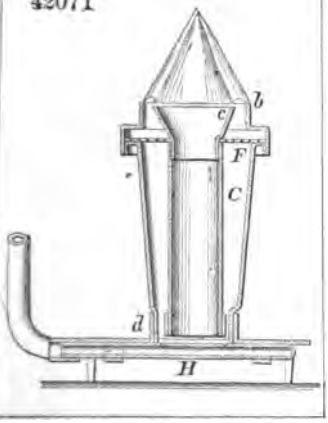

42073

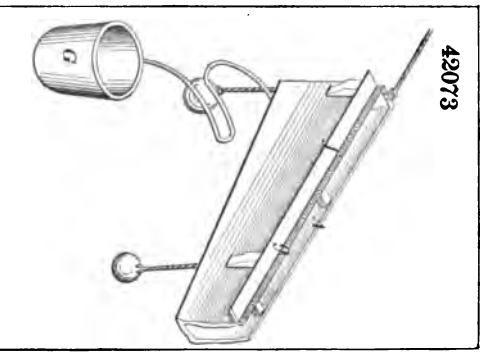

42074

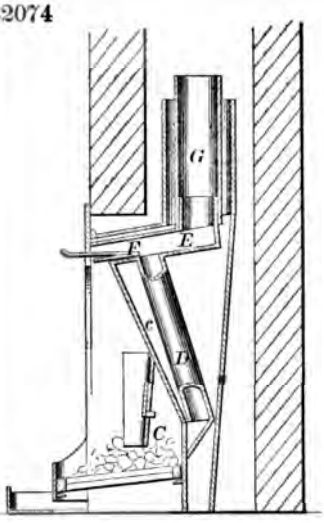

42076

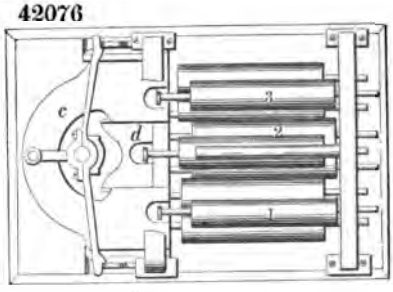

42079

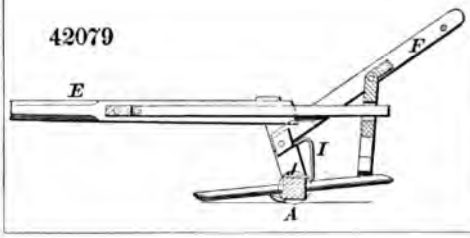

42075

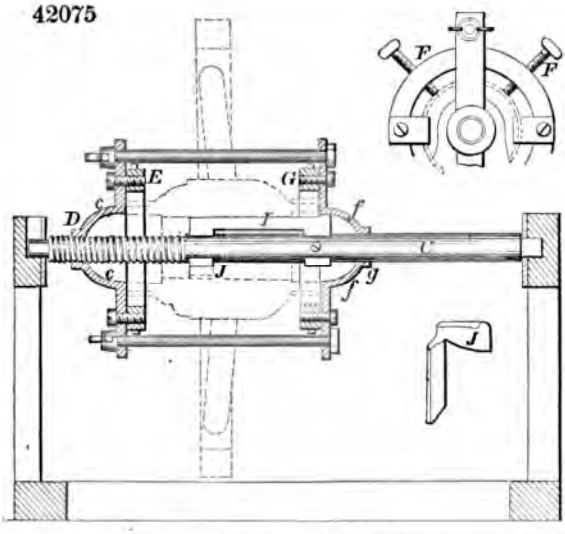

42077

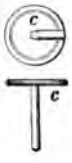

42078

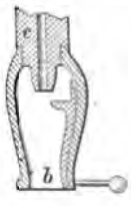

42080

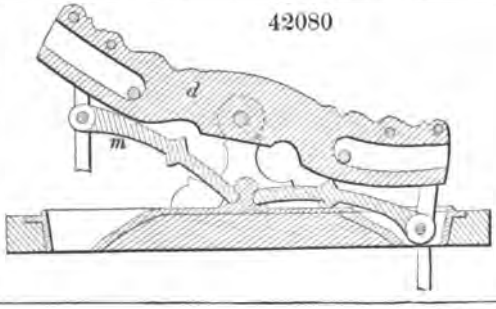

42081

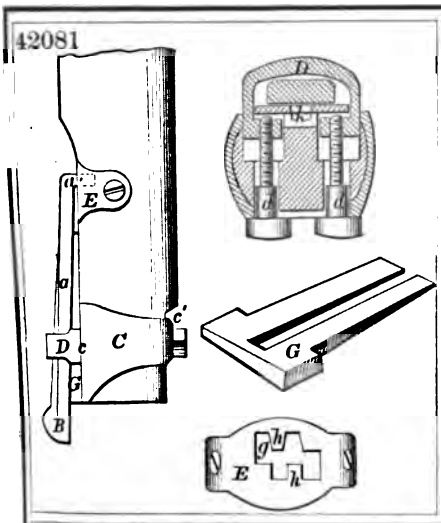

42084

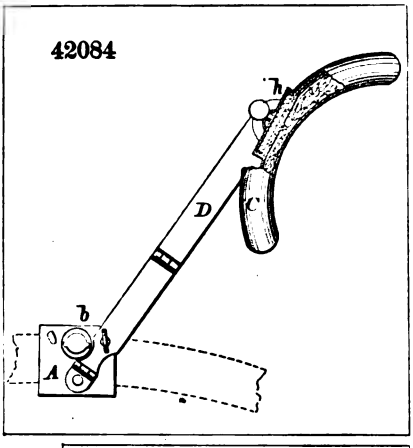

42082

42083

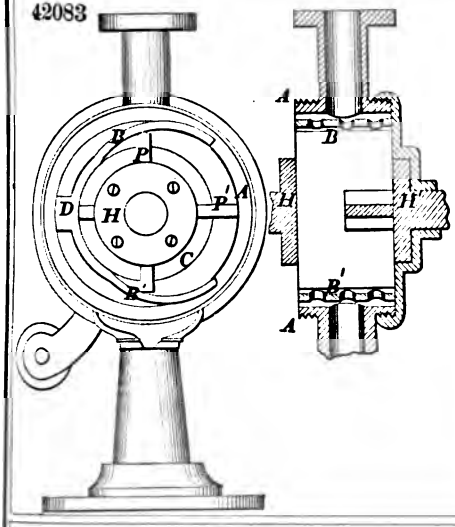

42086

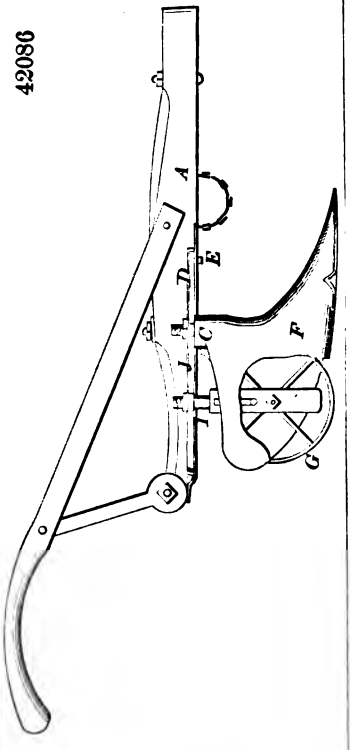

42085

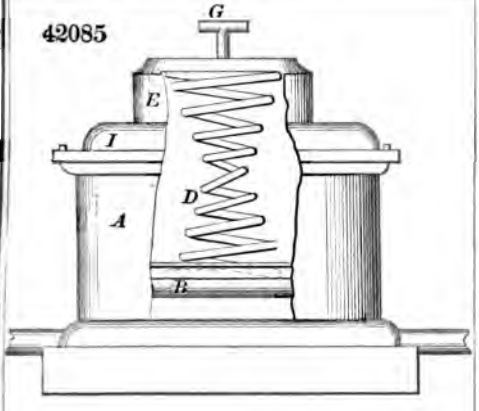

42087

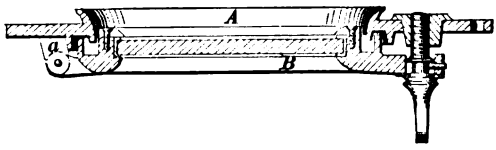

42090

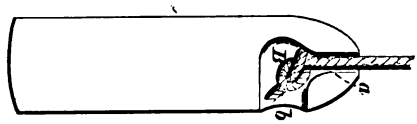

42091

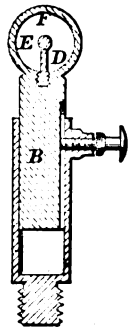

42088

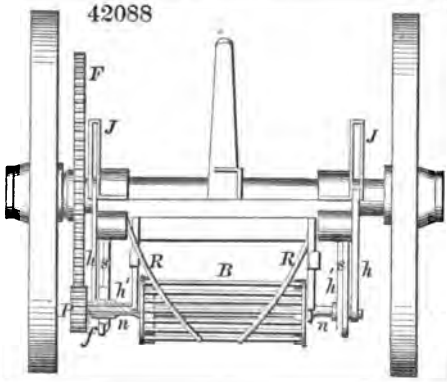

42093

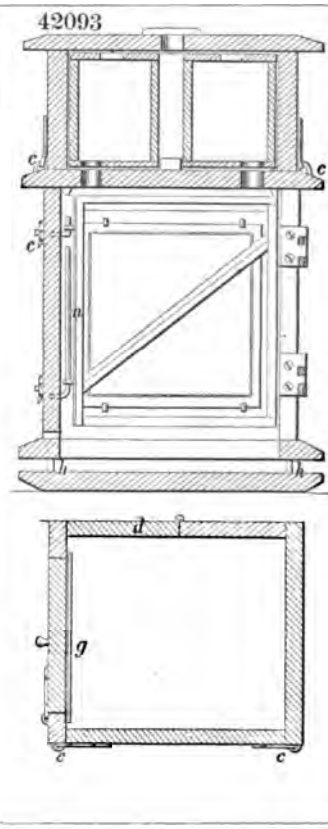

42089

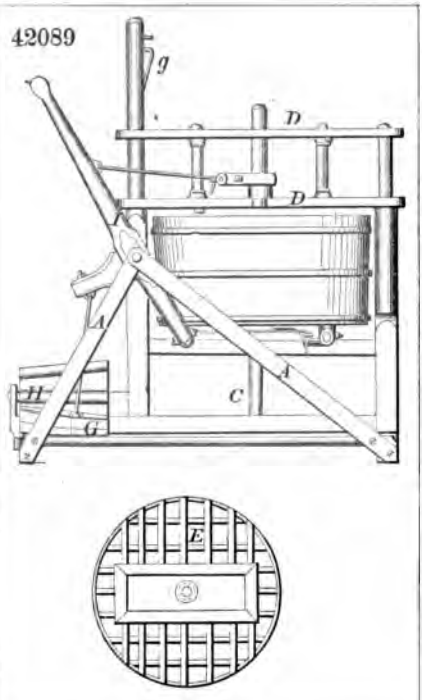

42092

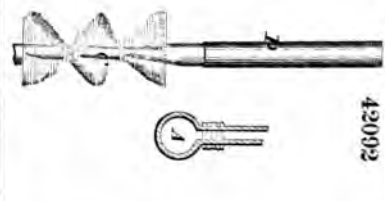

42094

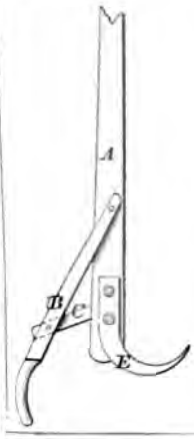

42095

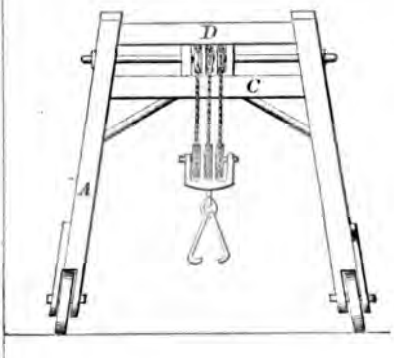

42096

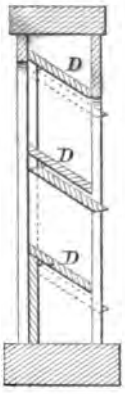

42099

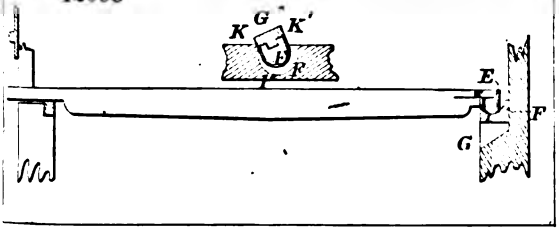

42098

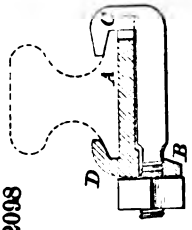

42097

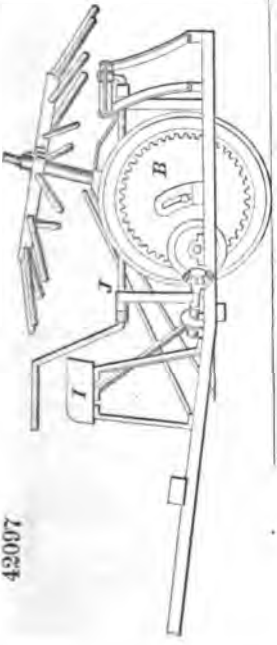

42101

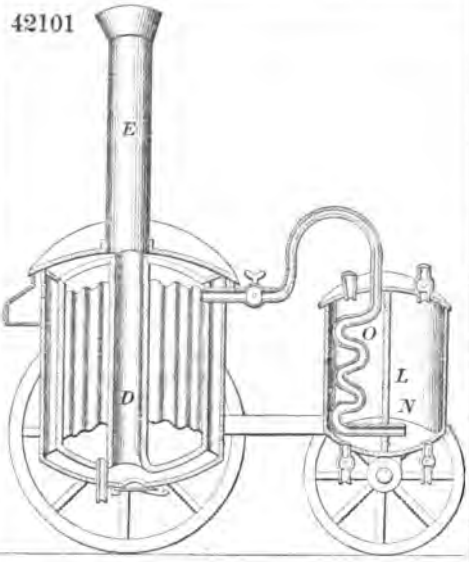

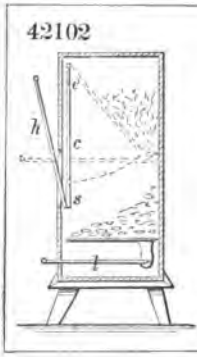
42102
h
c
s
l

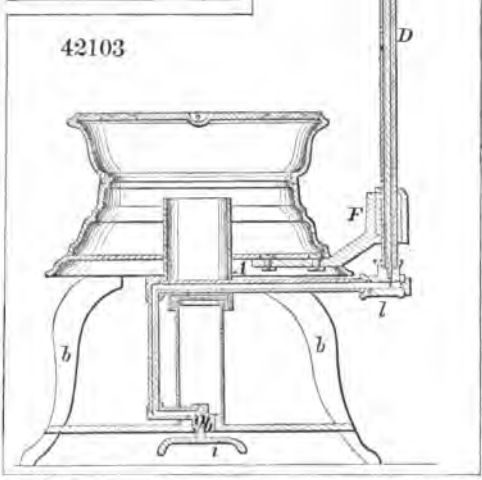
42103
o
s
C
D
F
l
b

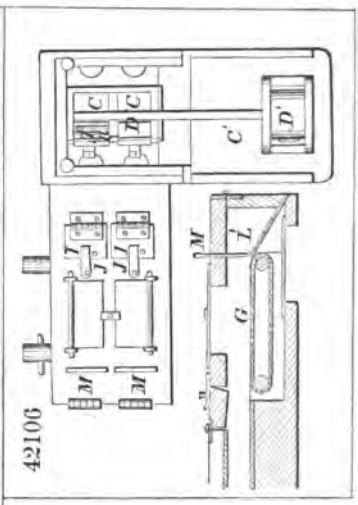
42106
C
C'
D'
J
M
L
G

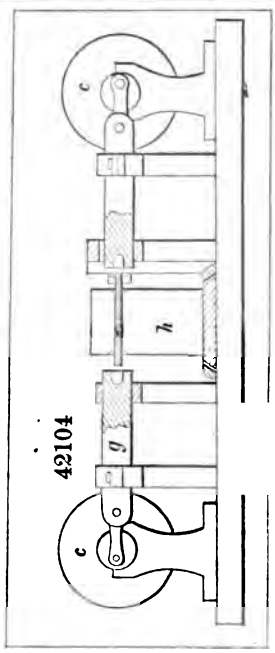
42104
c
h
g

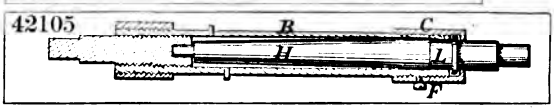
42105
B
C
H
L
F

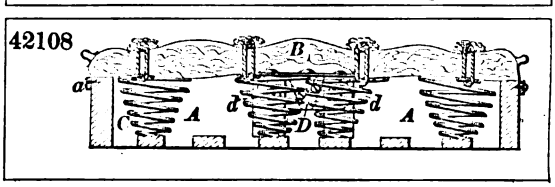
42108
B
a
A
d
D

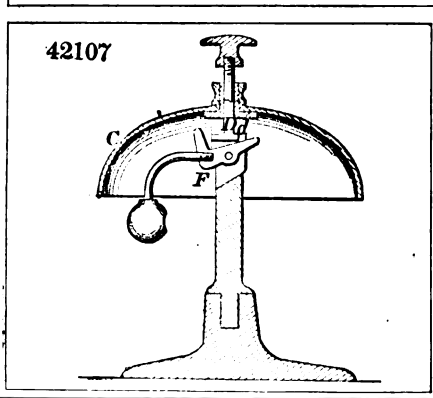
42107
C
F

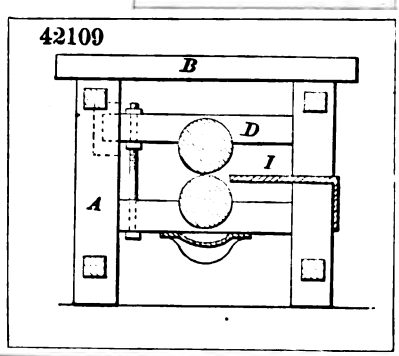
42109
B
D
I
A

42110

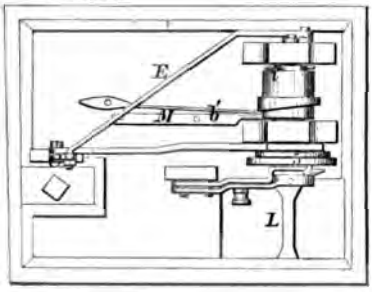

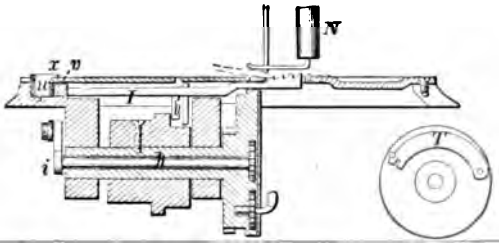

42111

42112

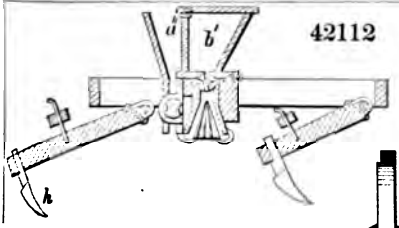

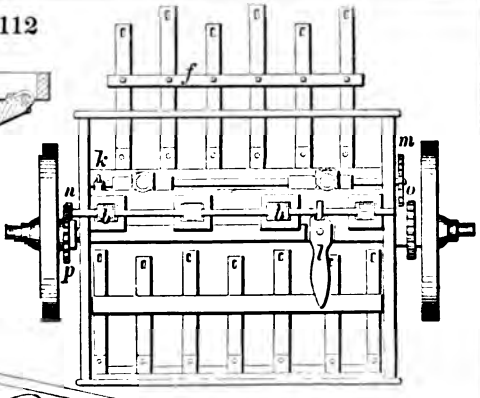

42114

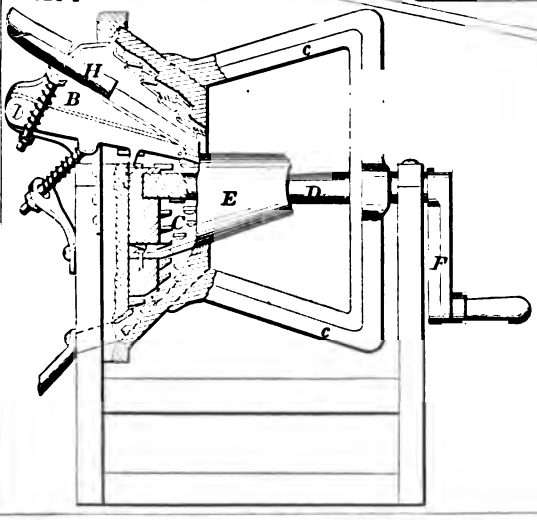

42113

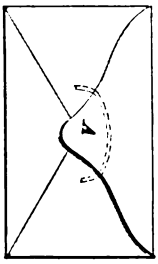

42102

42103

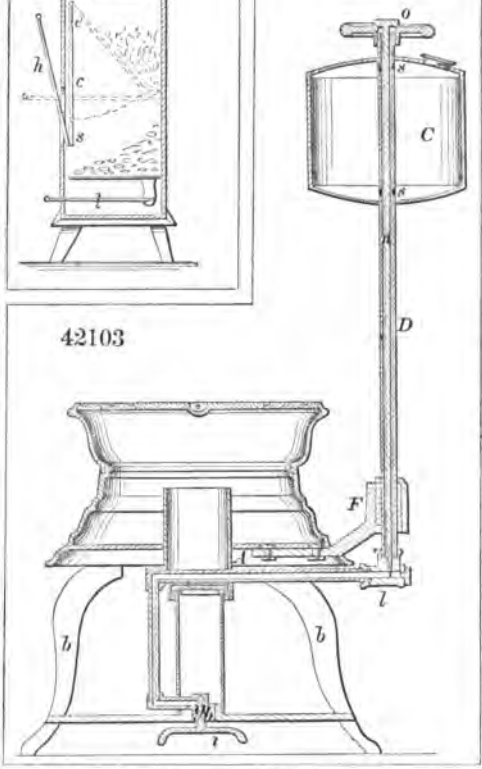

42106

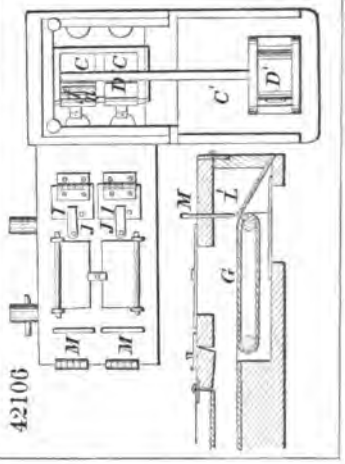

42104

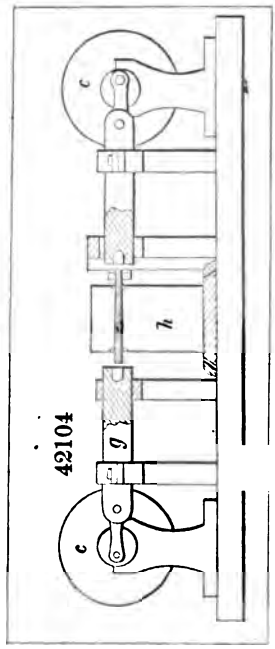

42105

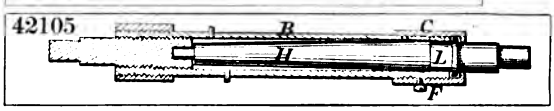

42108

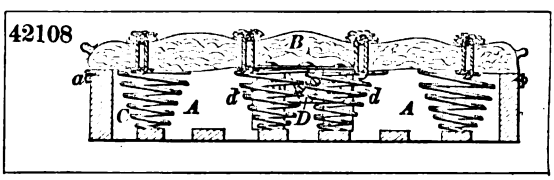

42107

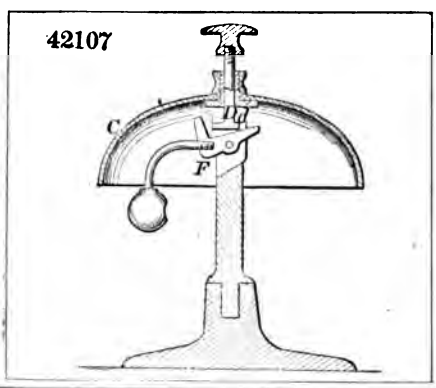

42109

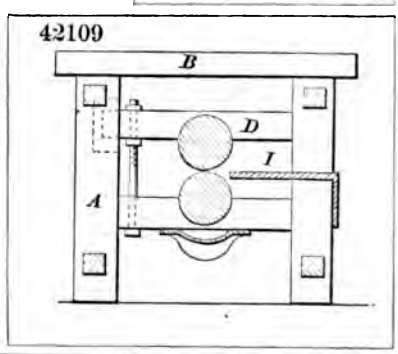

42110

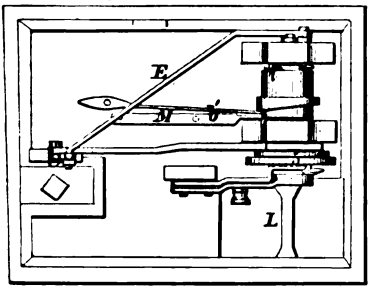

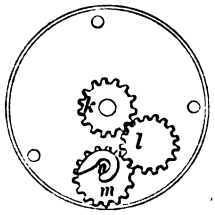

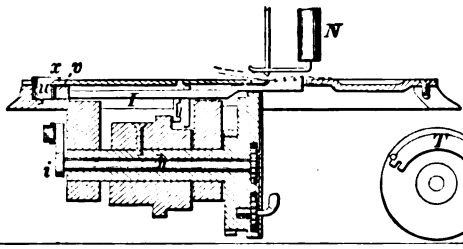

42111

42112

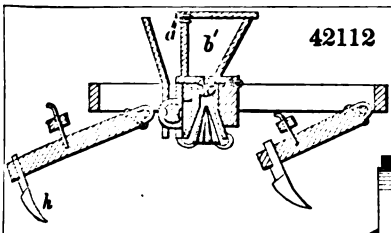

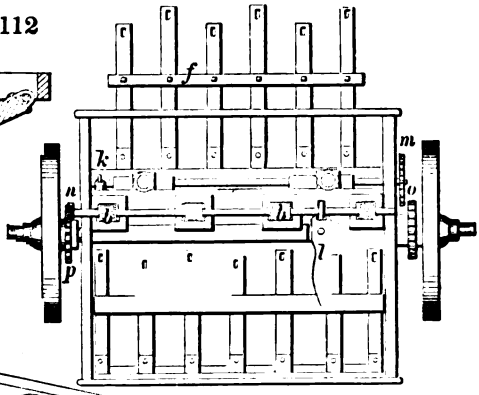

42114

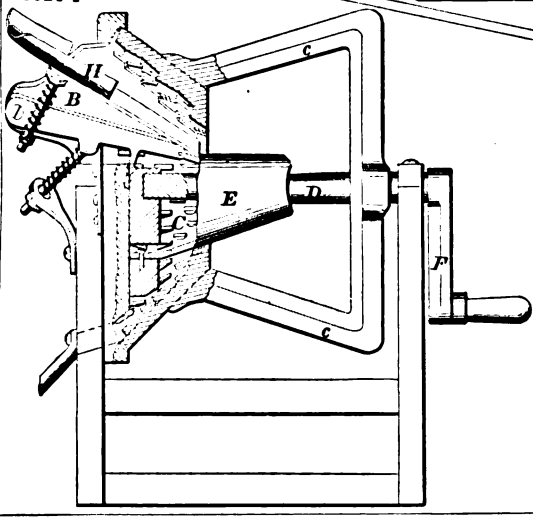

42113

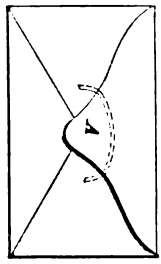

42116

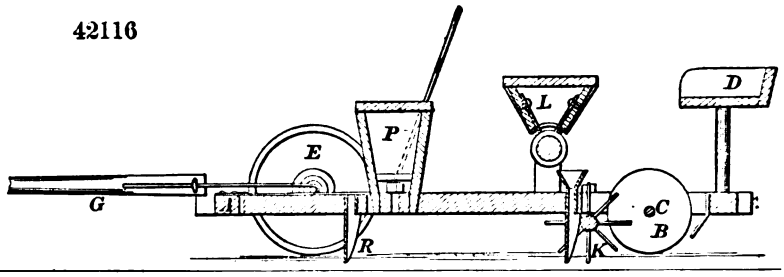

42117

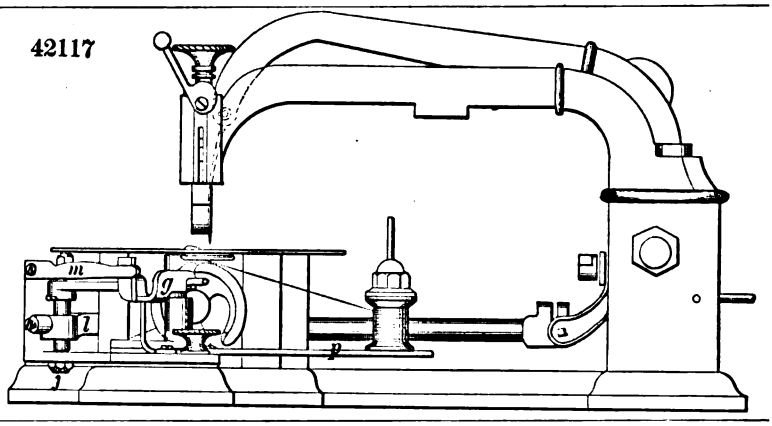

42119

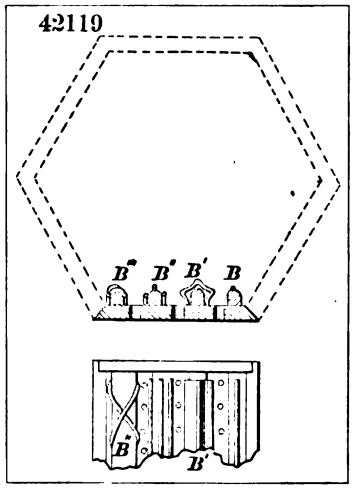

42118

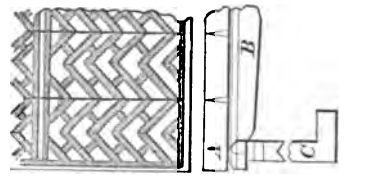

42121

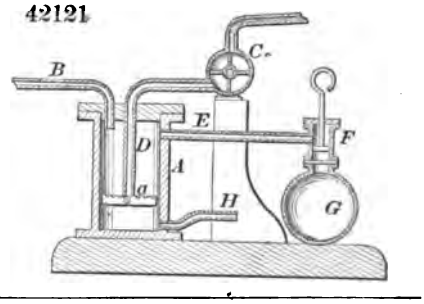

42120

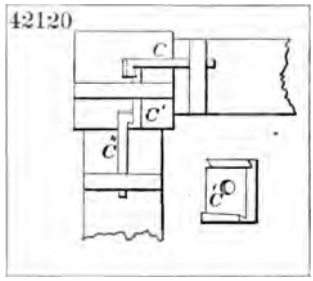

42122

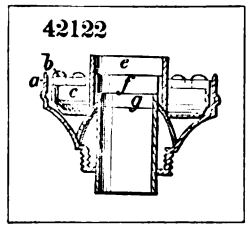

42123

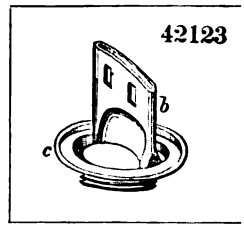

42124

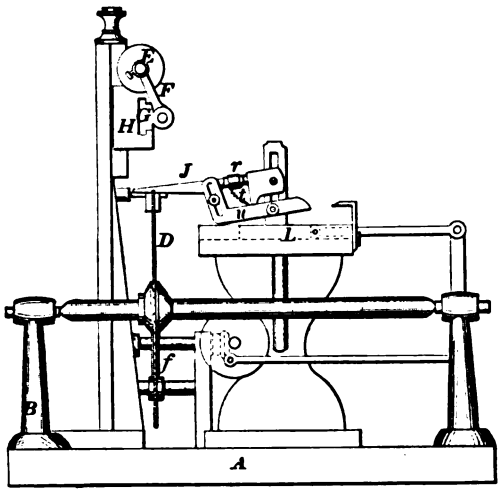

42126

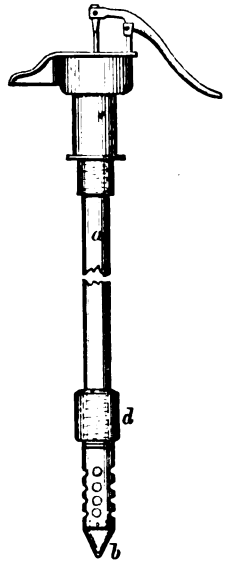

42125

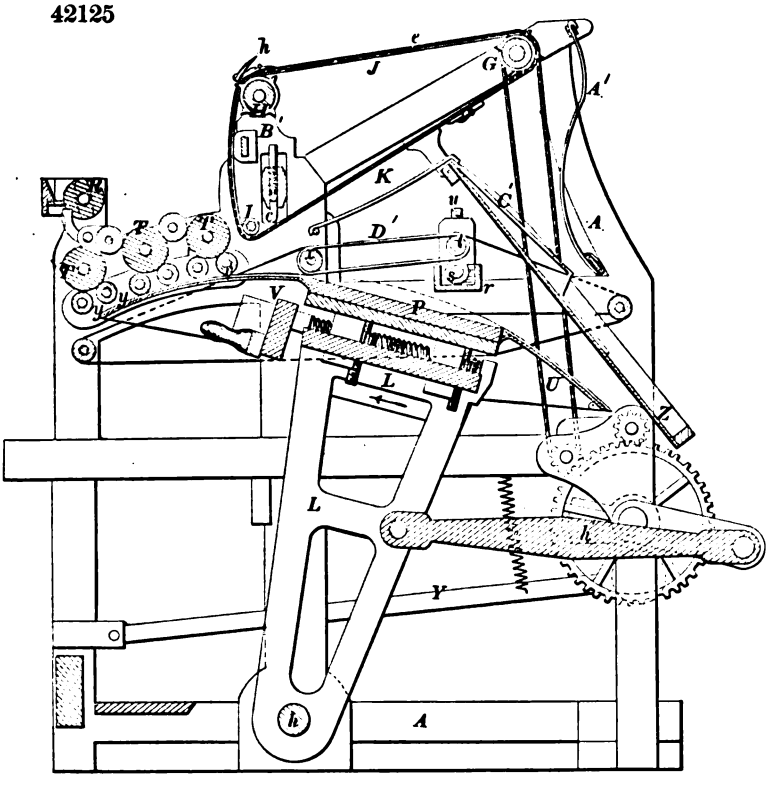

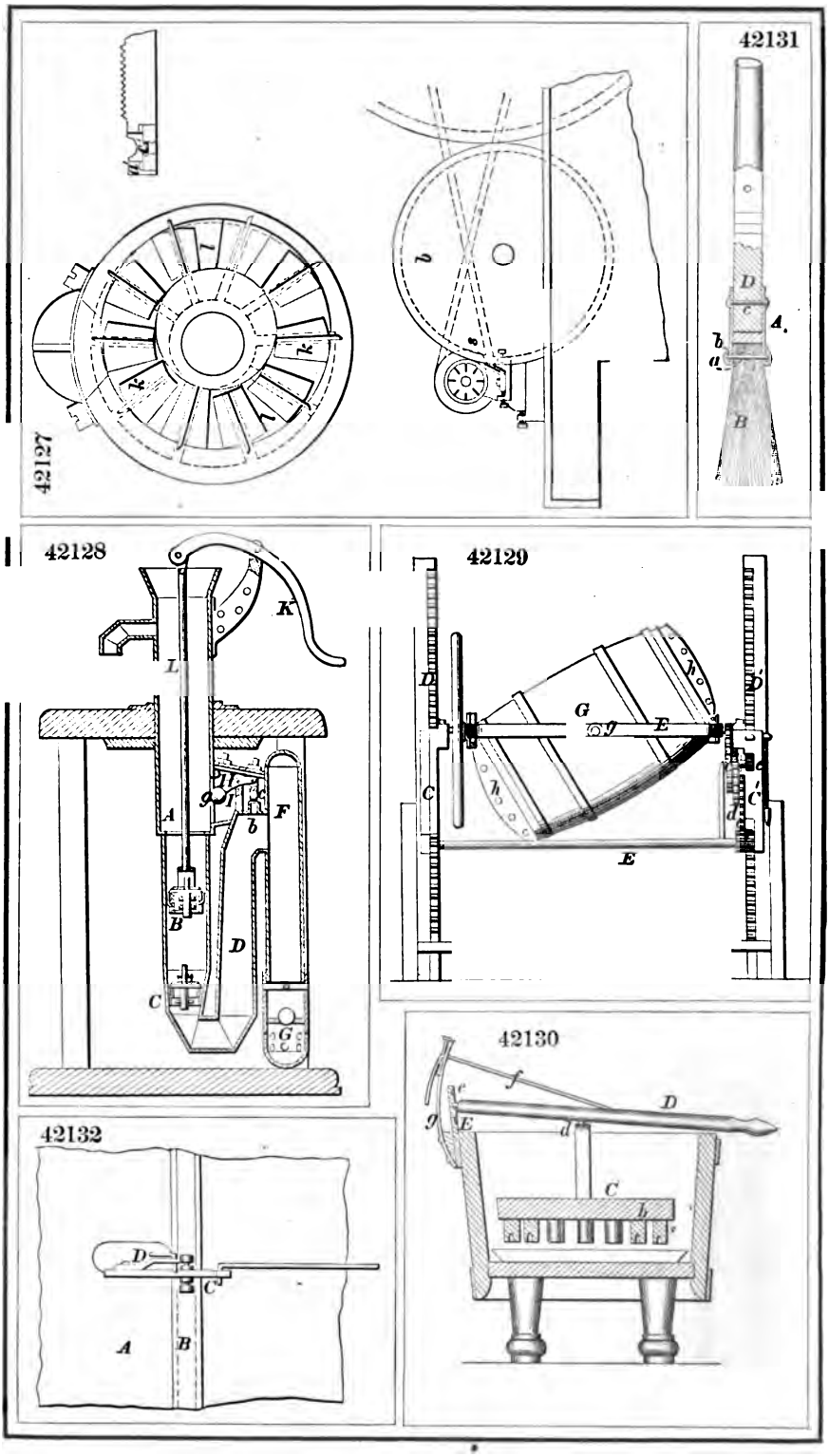
42137
42131
42128
42129
42130
42132

42133

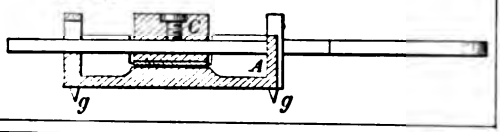

42134

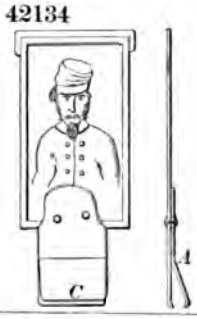

42135

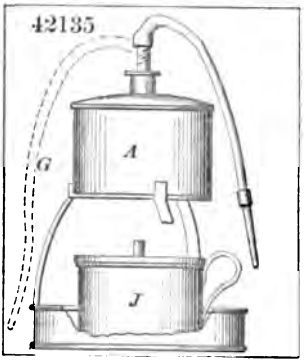

42136

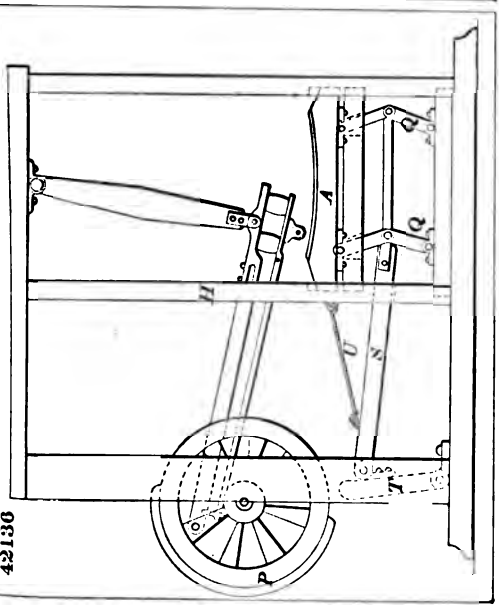

42138

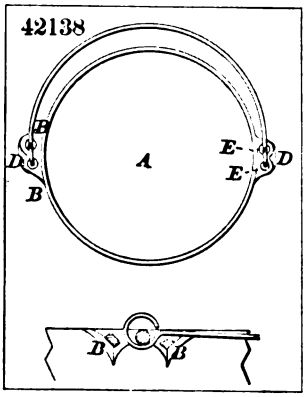

42137

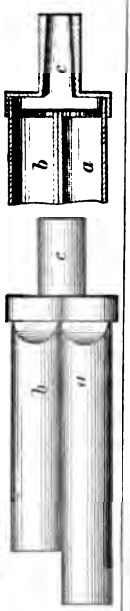

42139

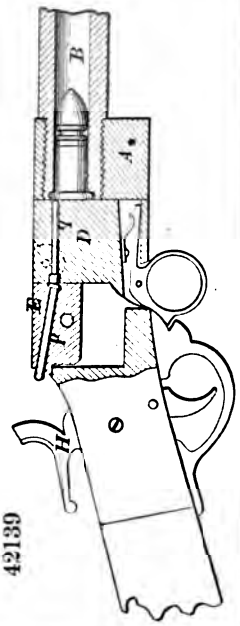

42141

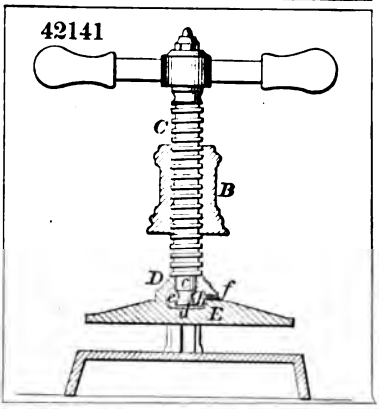

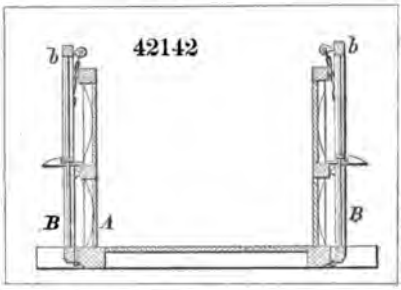
42142
b
b
B
A
B

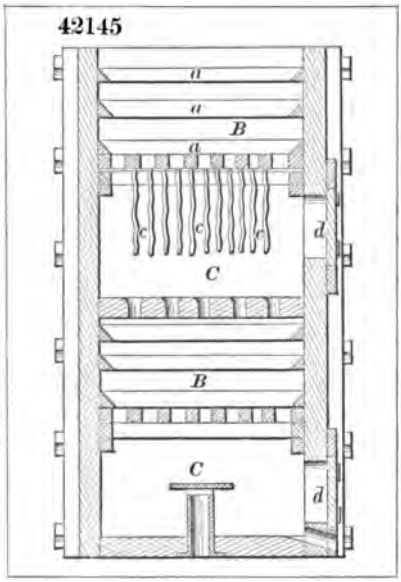
42145
a
a
B
a
c
c
c
d
C
B
C
d

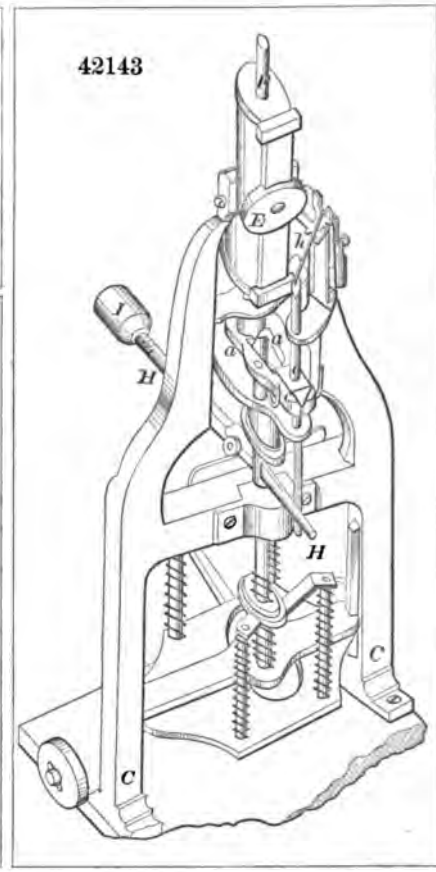
42143
E
h
J
H
a
a
a
H
C
C

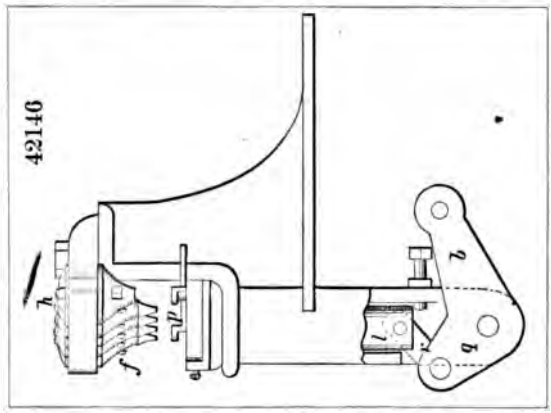
42146
h
f
d
e
l
l
g

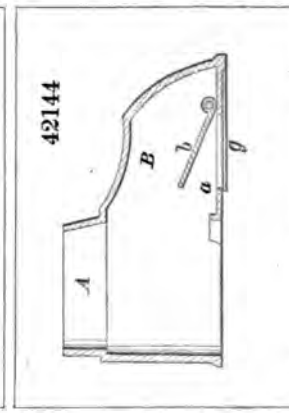
42144
B
b
g
a
A

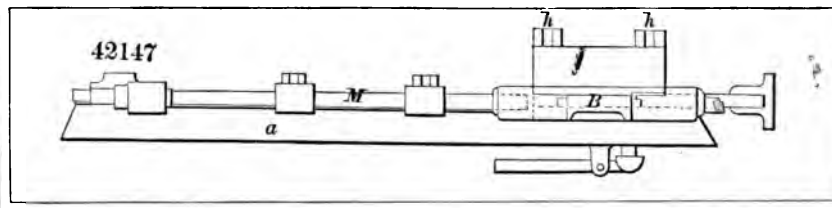
42147
h
h
J
M
B
a

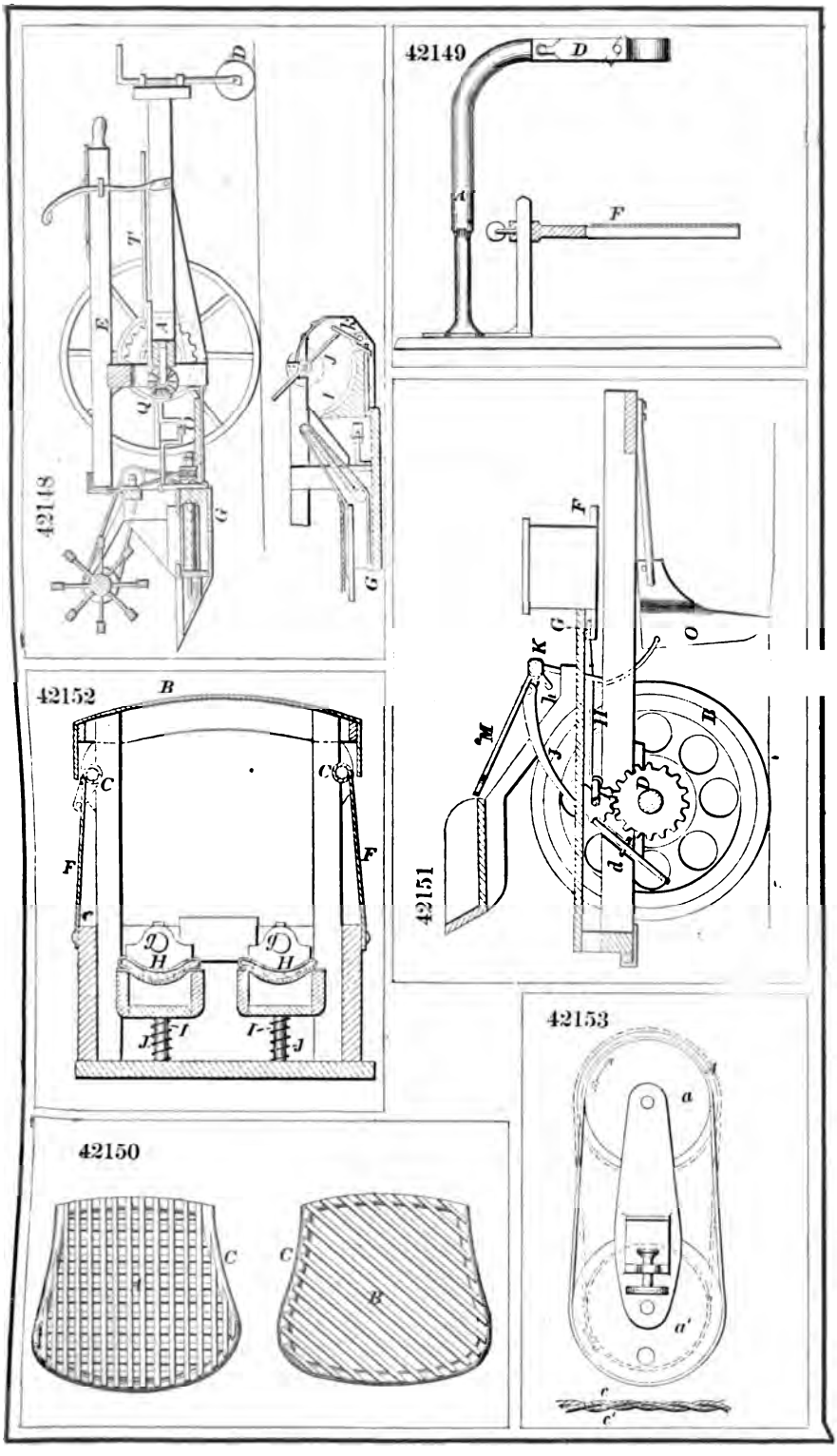
42148
42149
42150
42151
42152
42153

42154

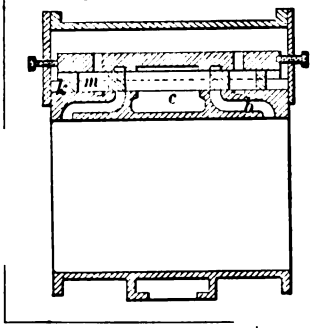

42159

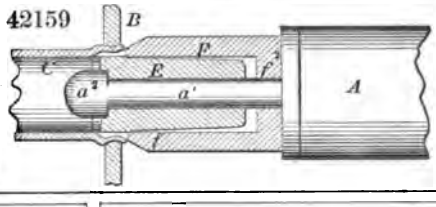

42158

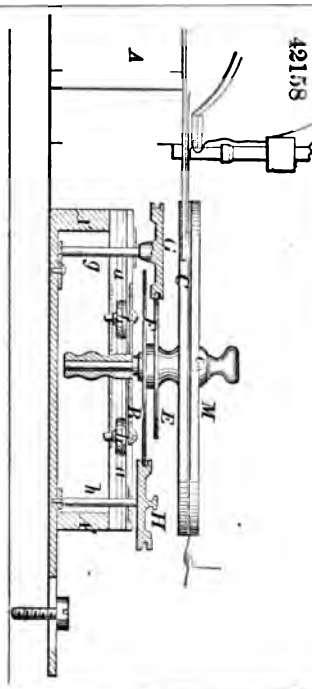

42160

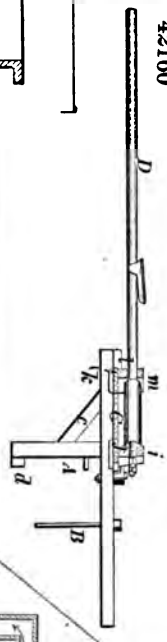

42157

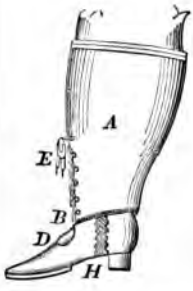

42161

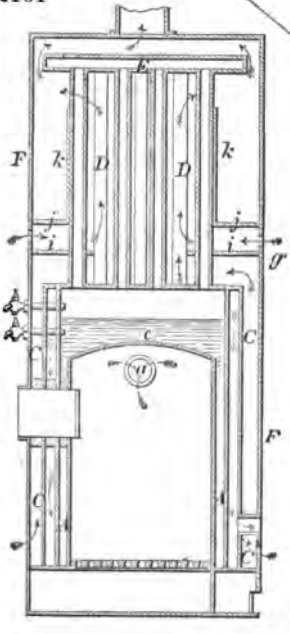

42162

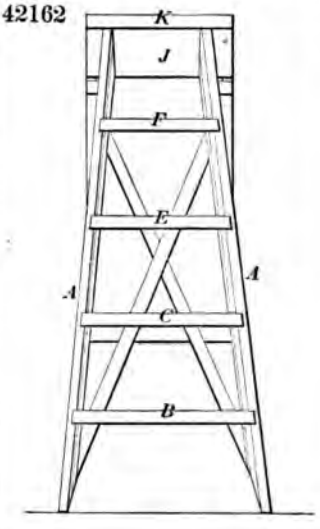

42164

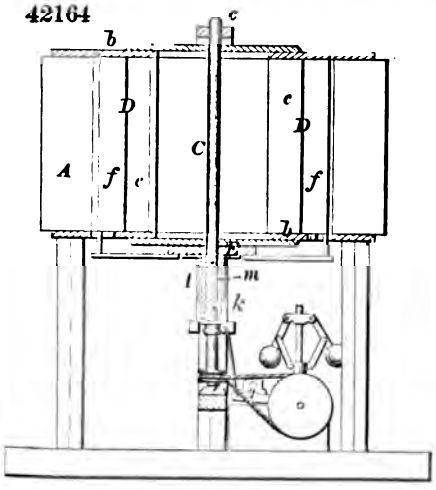

42167

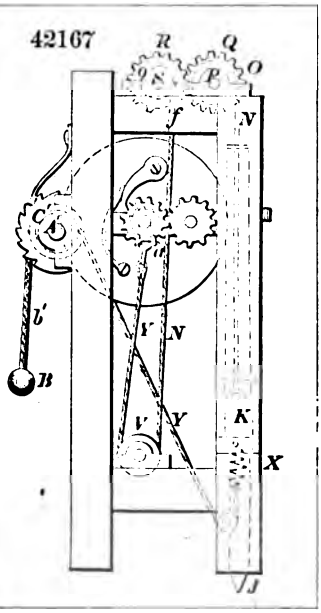

42165

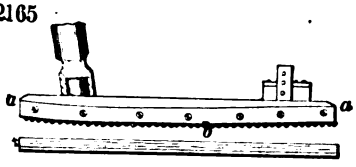

42168

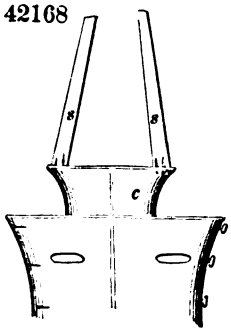

42166

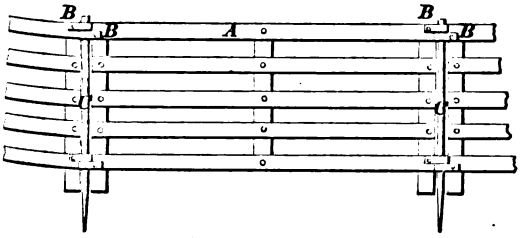

42169

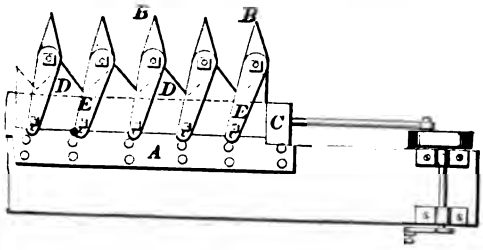

42170

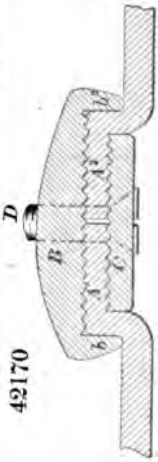

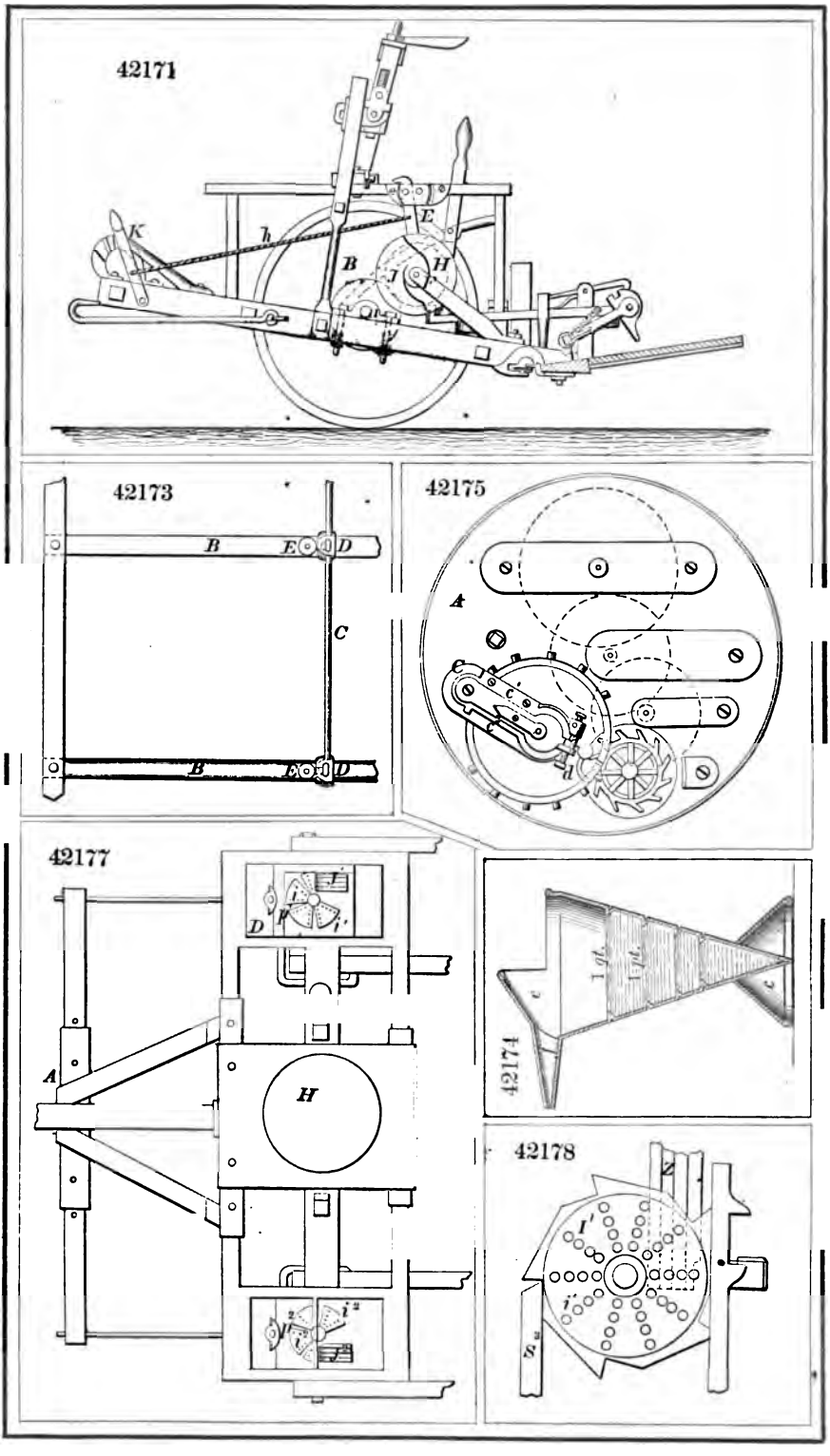
42171
K
h
B
E
H
J
42173
B
E
D
C
B
E
D
42175
A
C
h
42177
A
H
D
F
i
i²
42174
c
c
42178
Z
I'
i
a

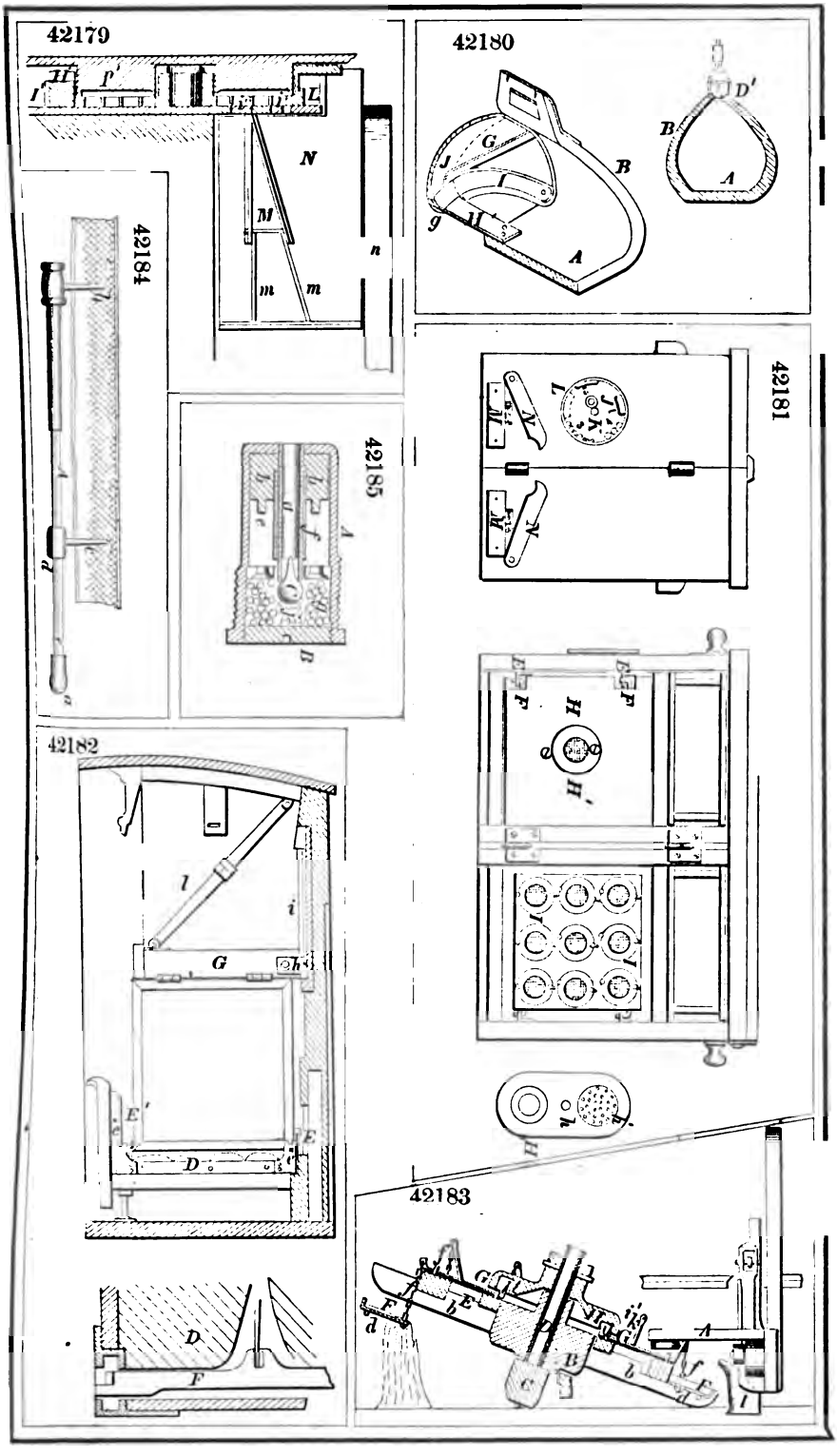
42179
42180
42181
42182
42183
42184
42185

42186

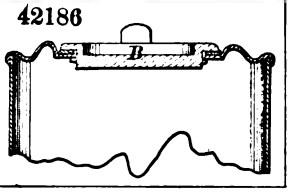

42187

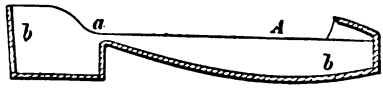

42188

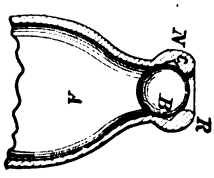

42189

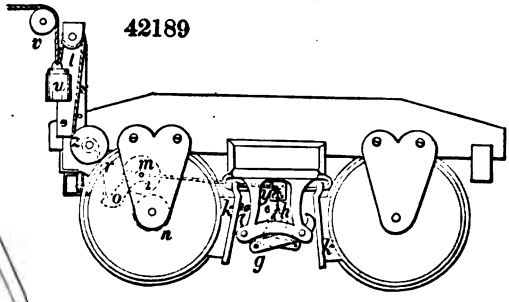

42190

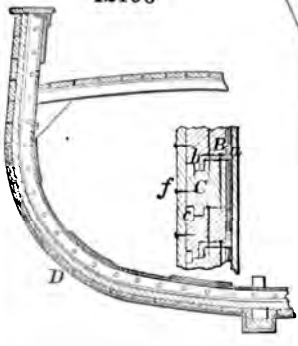

42192

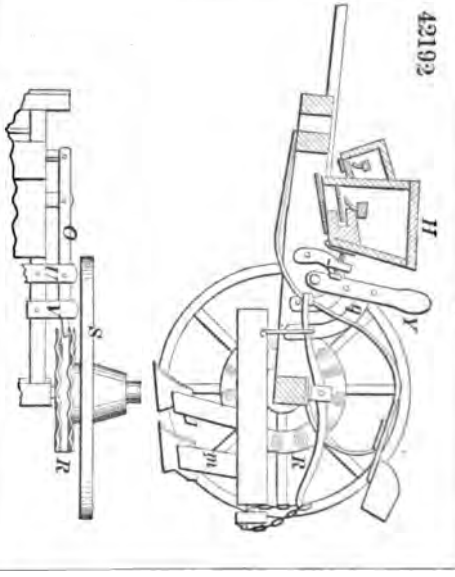

42191

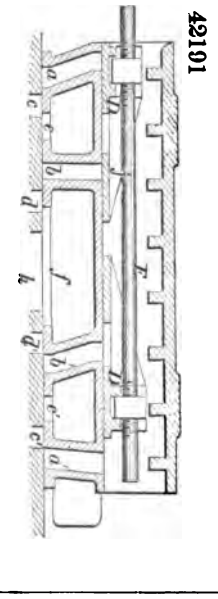

42193

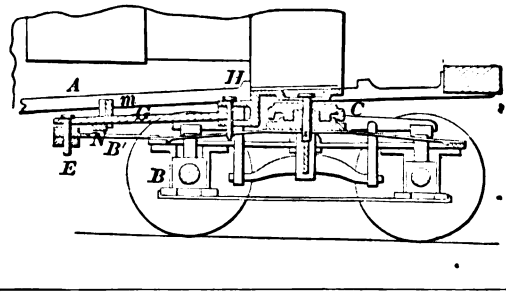

42194

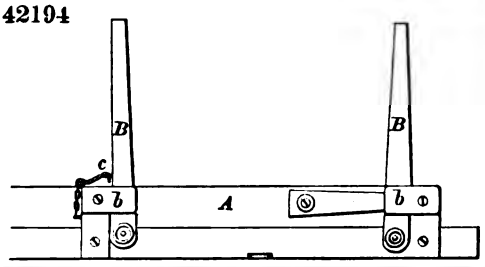

42195

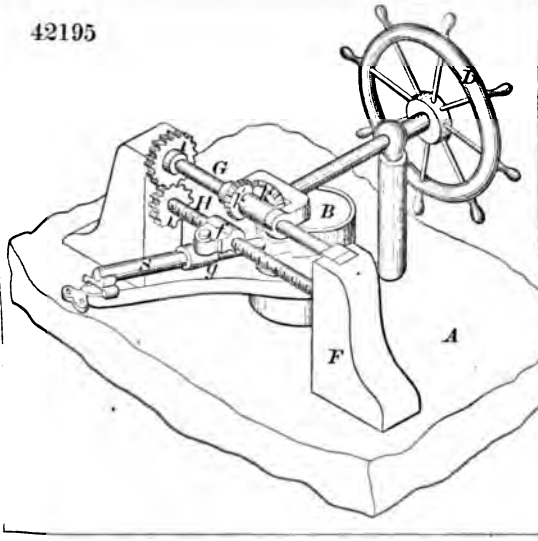

42196

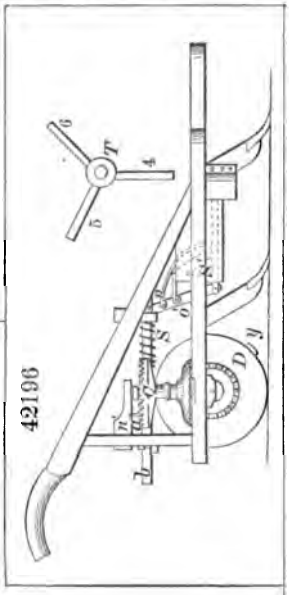

42197

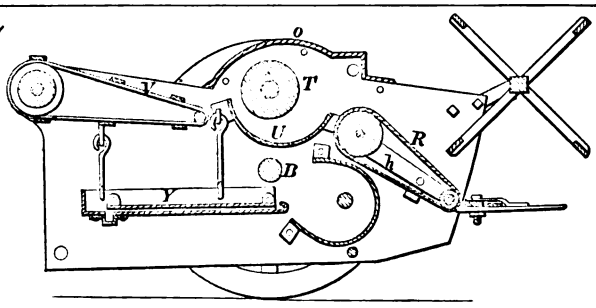

42198

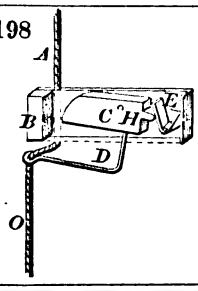

42199

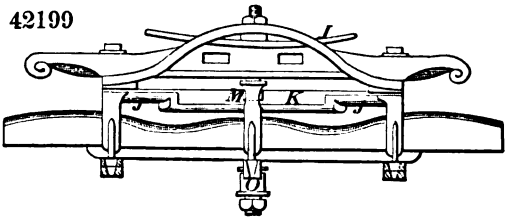

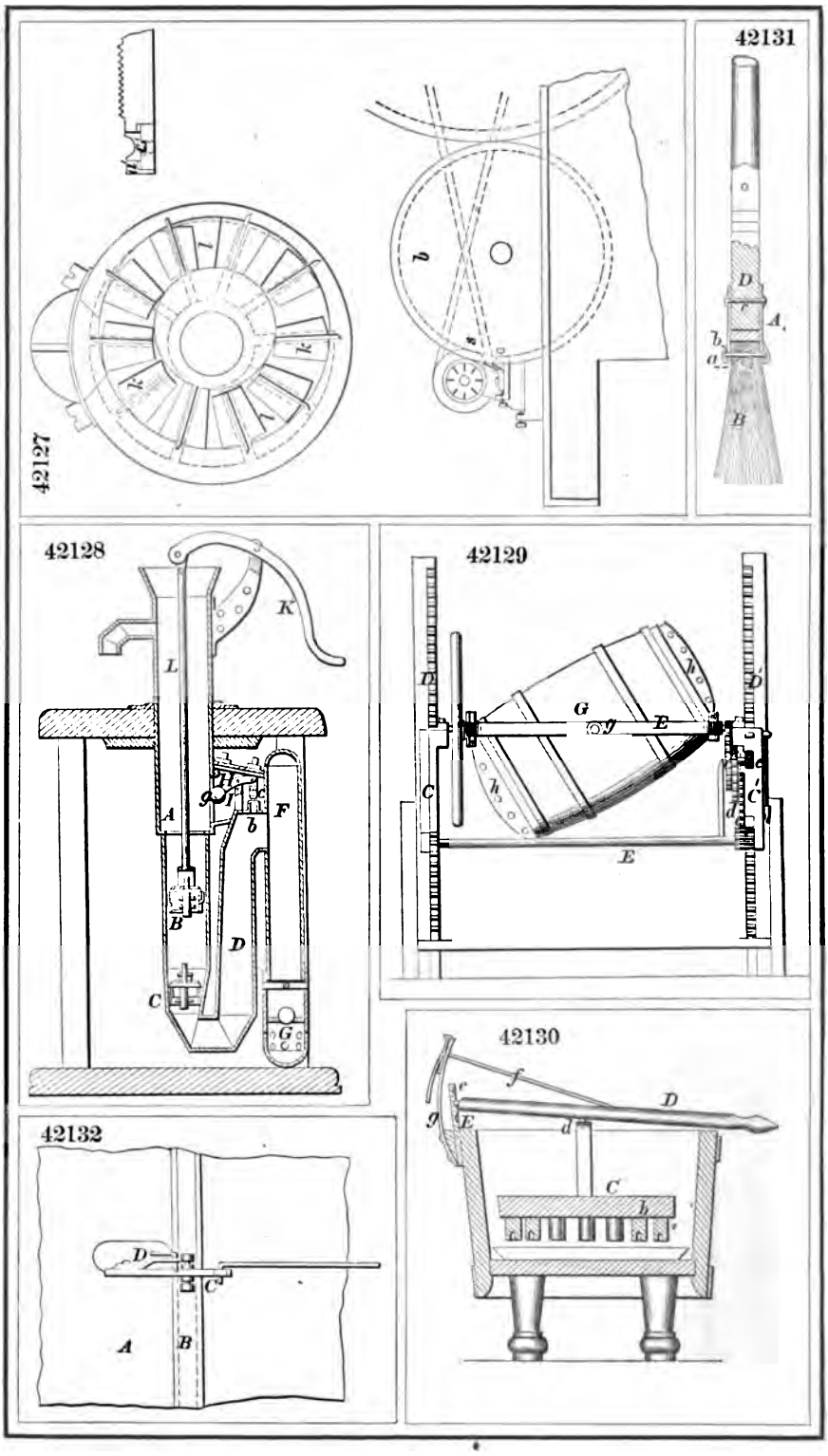
42127
42131
42128
42129
42130
42132

42133

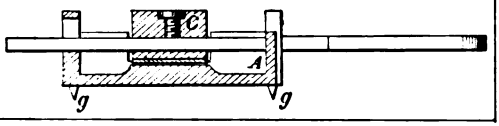

42134

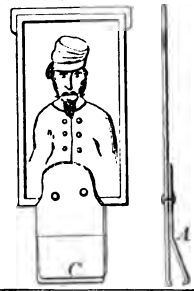

42135

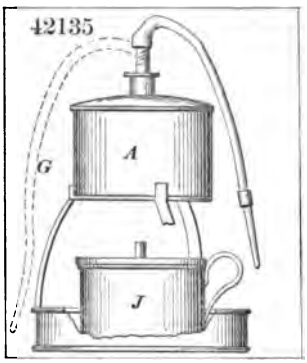

42136

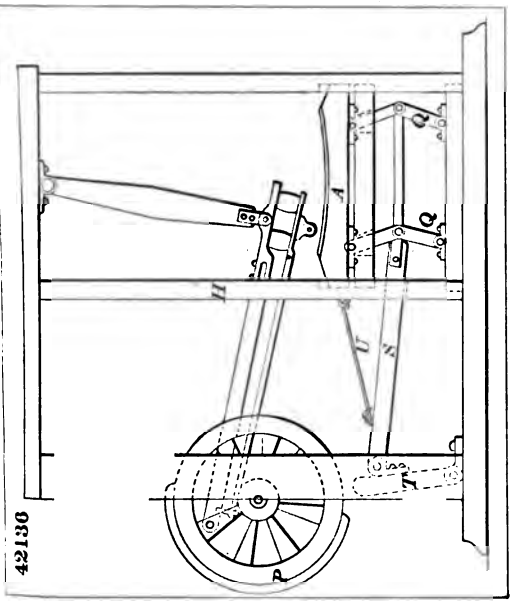

42138

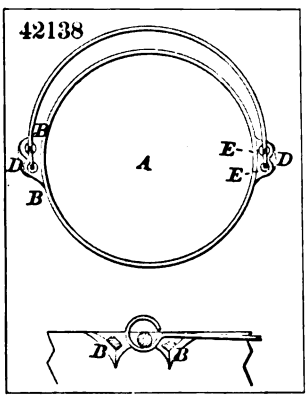

42137

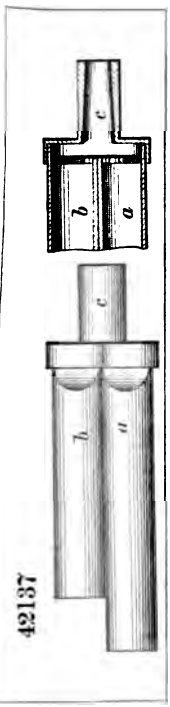

42139

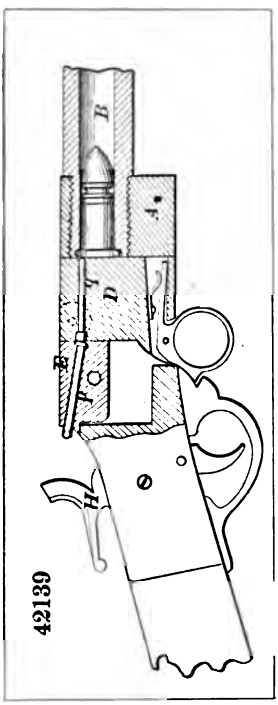

42141

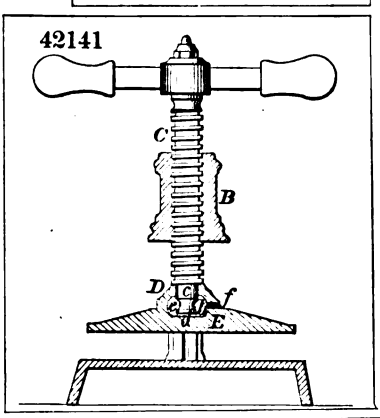

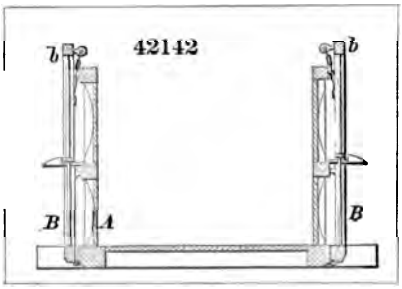
42142
b
b
B
A
B

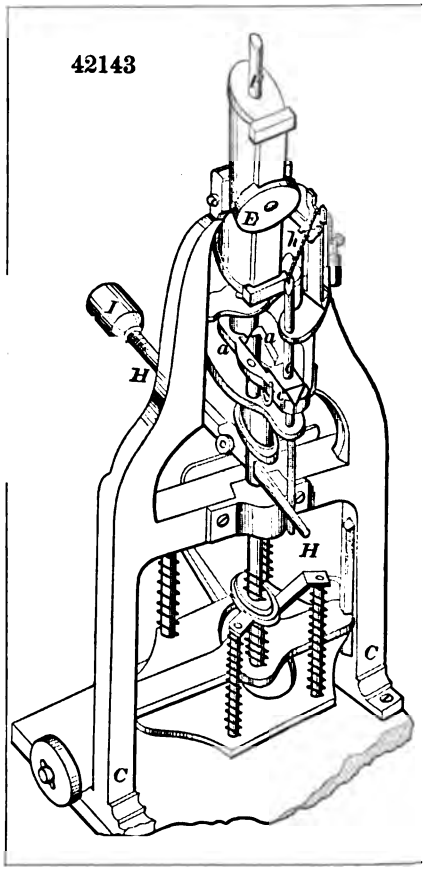
42143
E
h
J
H
H
C
C

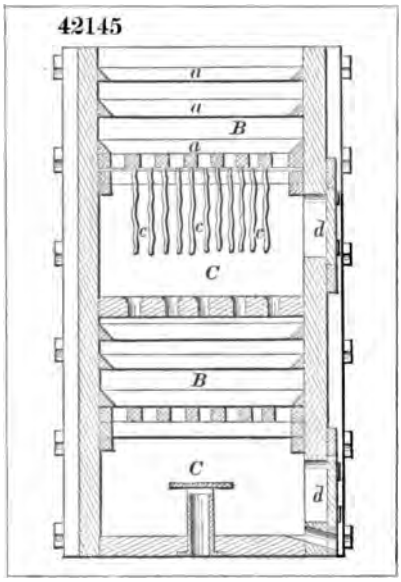
42145
a
a
B
a
c
c
c
d
C
B
C
d

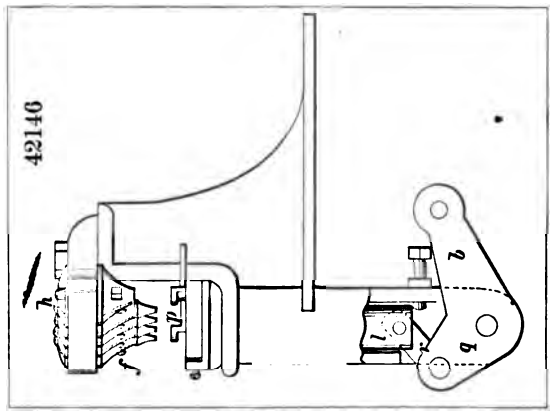
42146
h
f
l
b

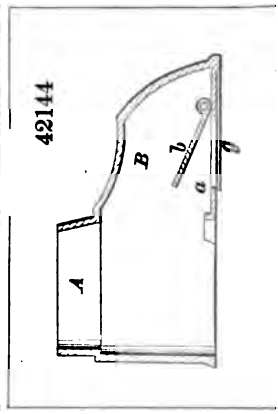
42144
B
b
a
A

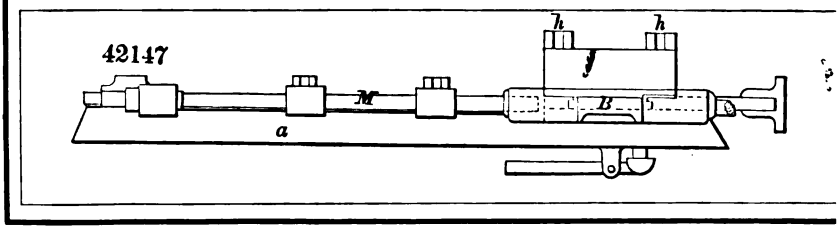
42147
h
h
f
M
B
a

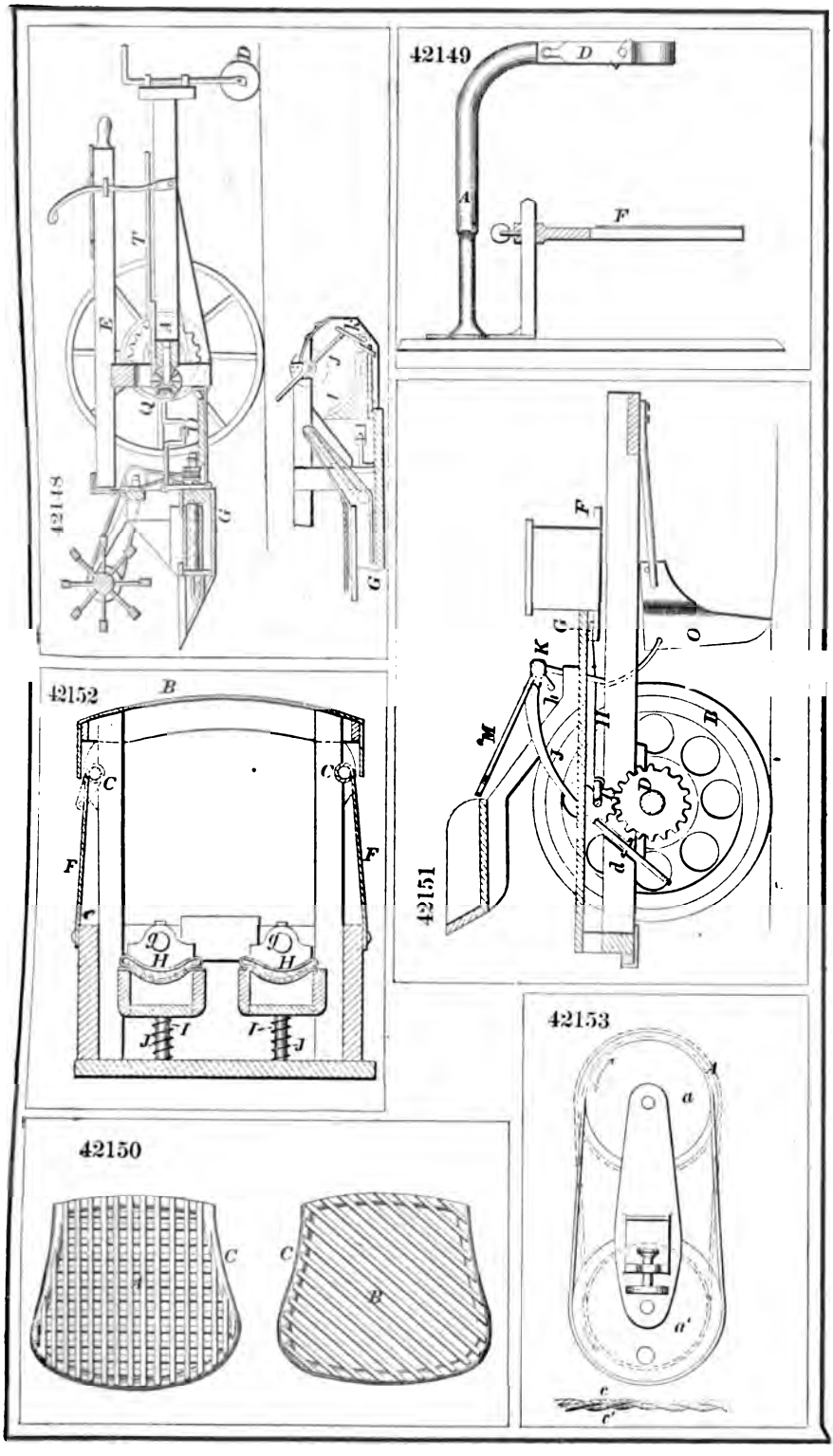
42148
42149
42150
42151
42152
42153

42154

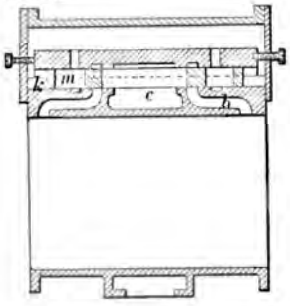

42159

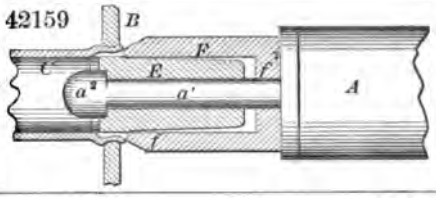

42158

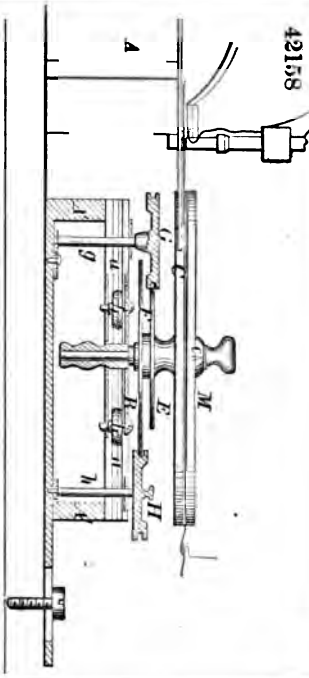

42160

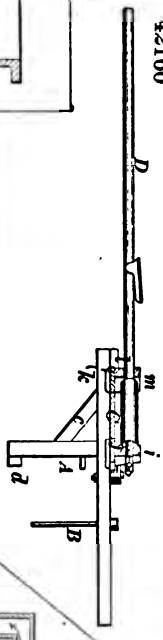

42157

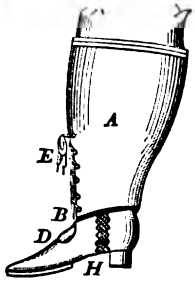

42161

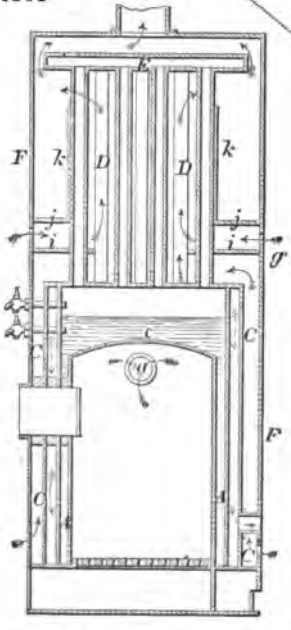

42162

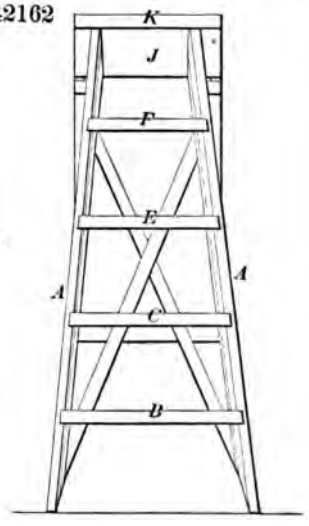

42164

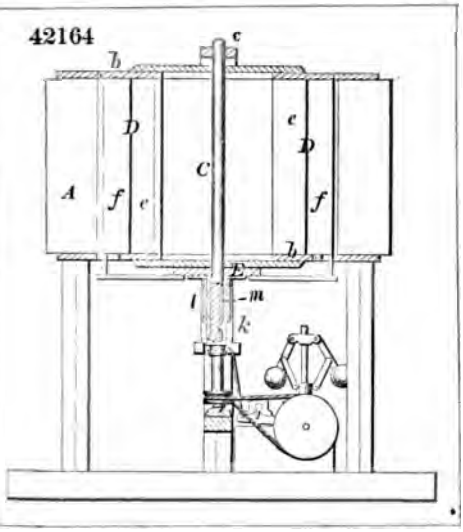

42167

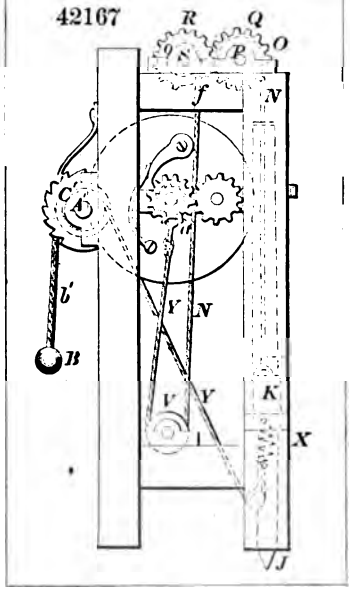

42165

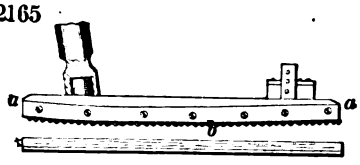

42168

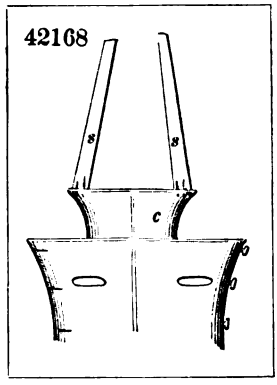

42166

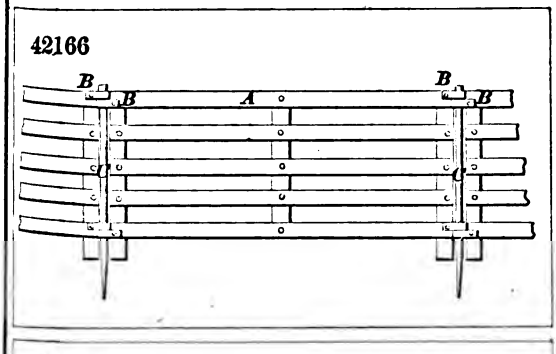

42169

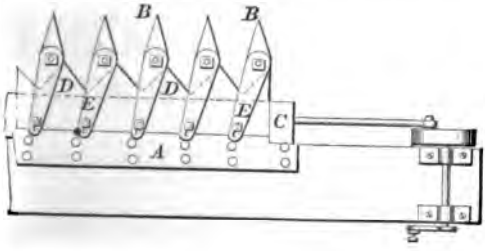

42170

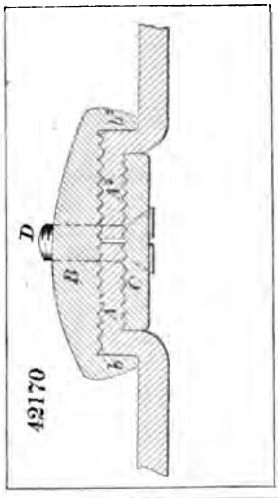

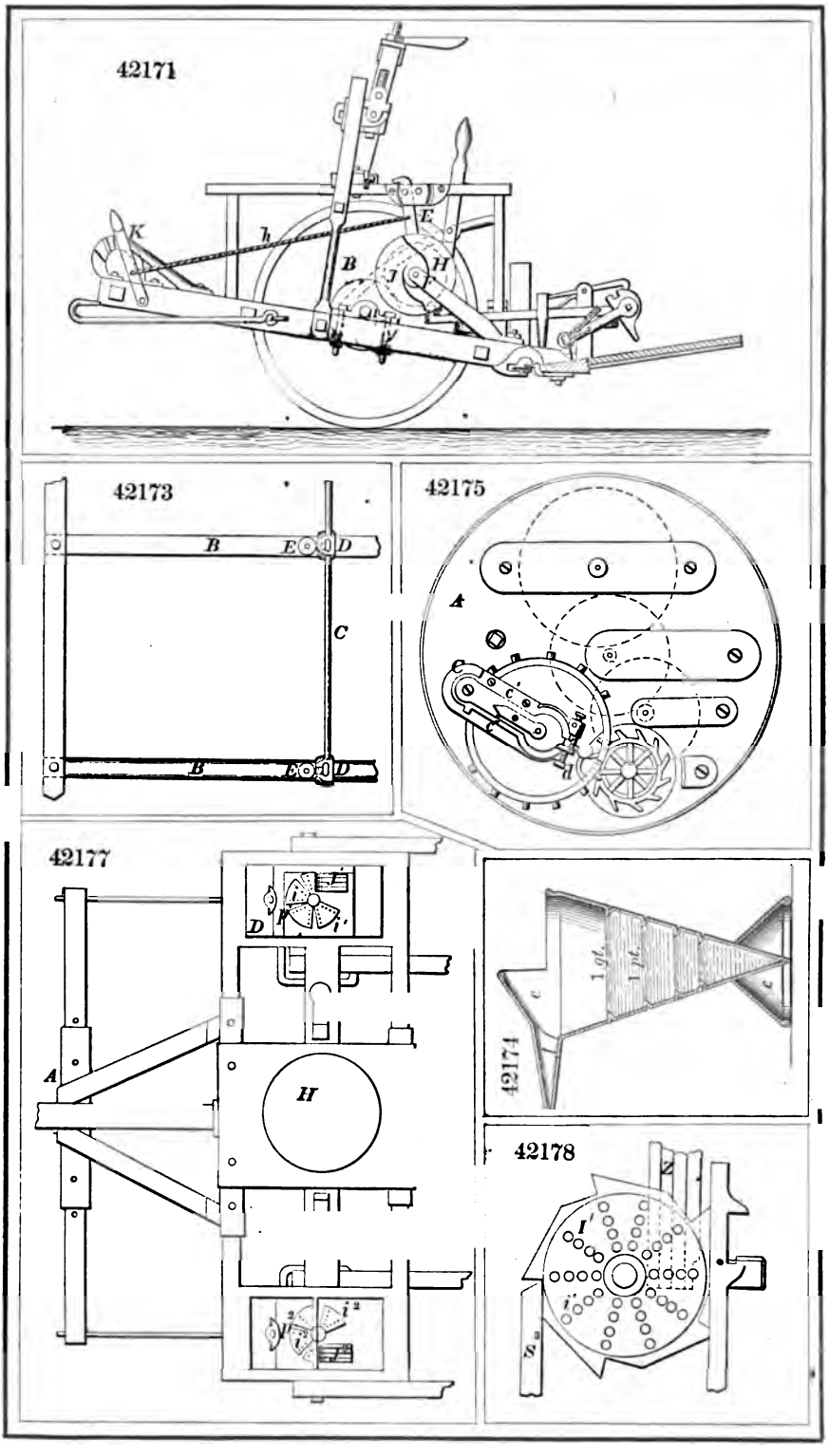
42171
K
h
E
B
J
H
42173
B
E
D
C
B
E
D
42175
A
C
42177
D
A
H
42174
1 pt.
1 pt.
42178
I'
i'

42179

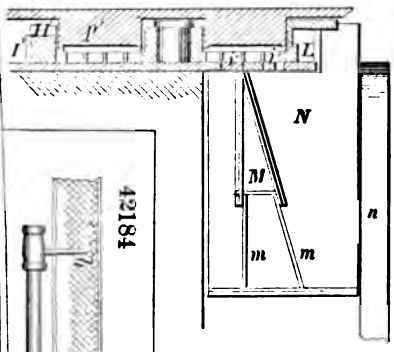

42180

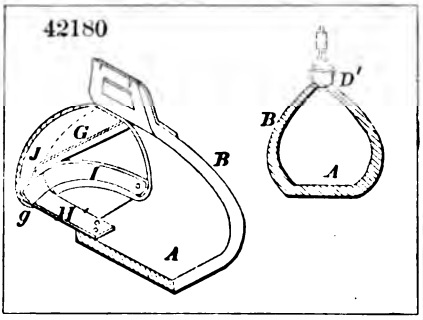

42184

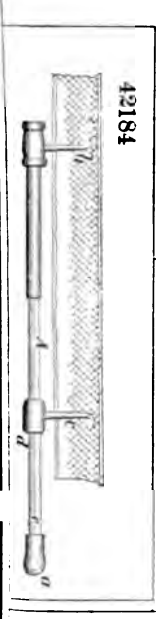

42185

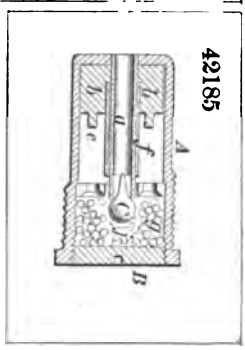

42181

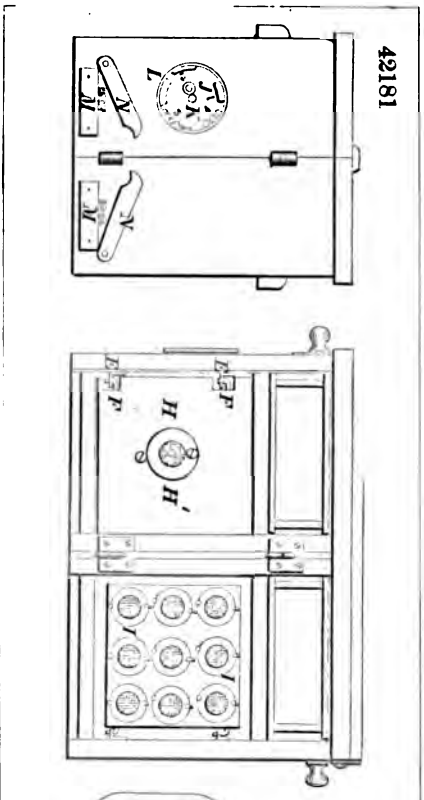

42182

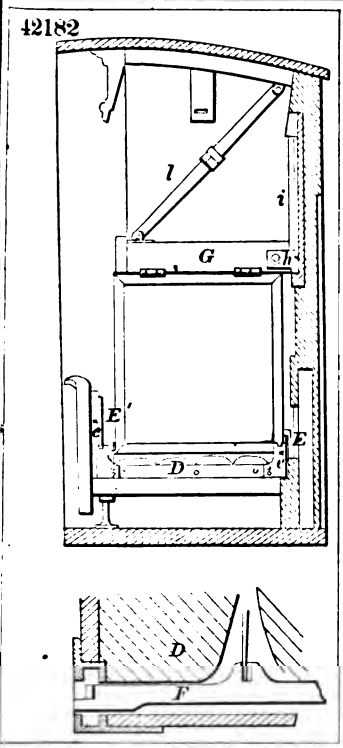

42183

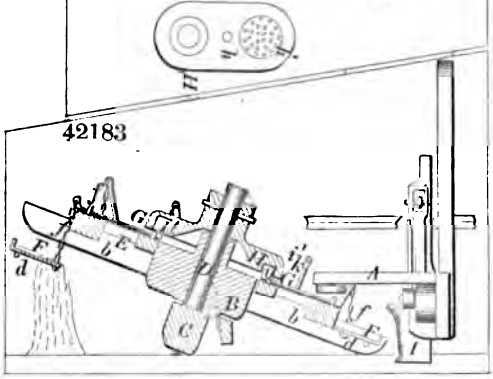

42186

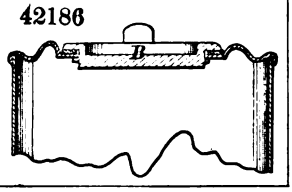

42187

42188

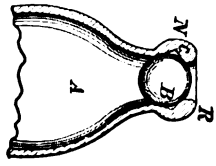

42189

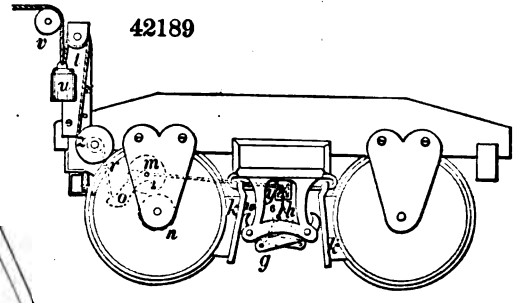

42190

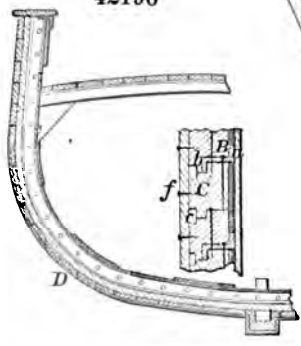

42192

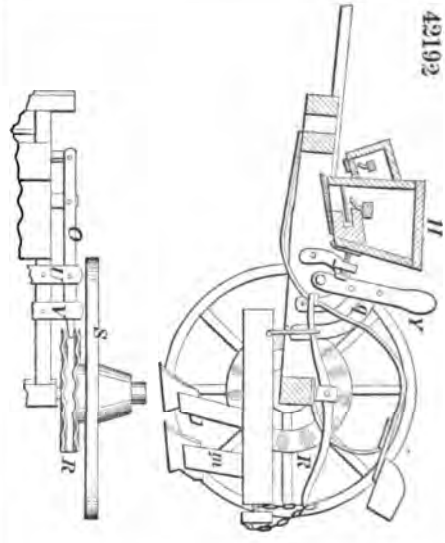

42191

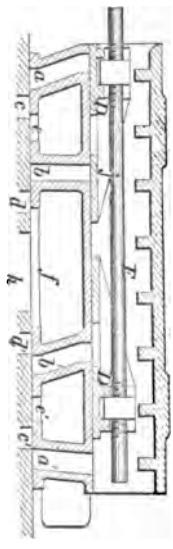

42193

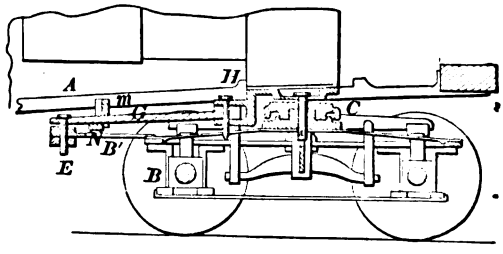

42194

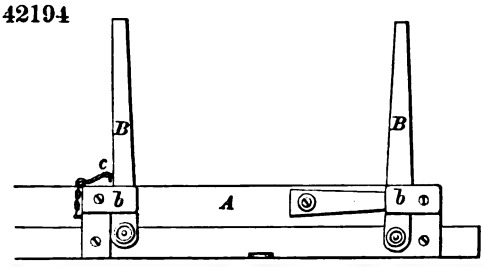

42195

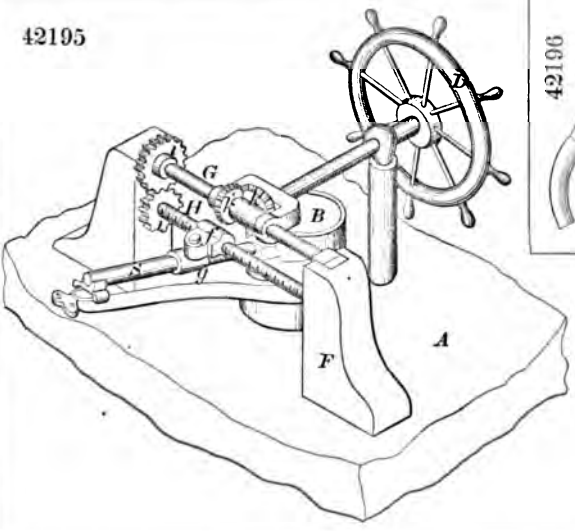

42196

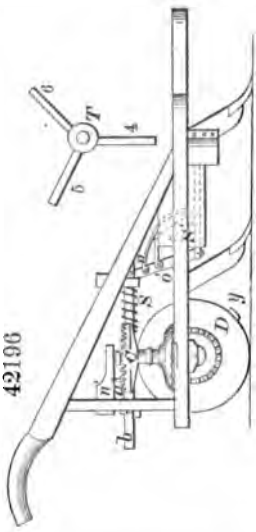

42197

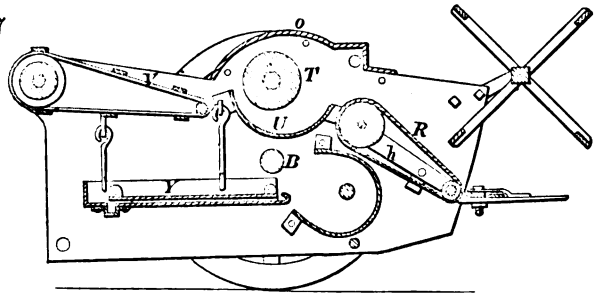

42198

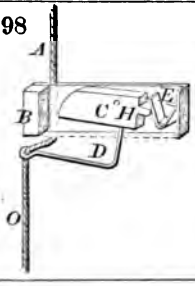

42199

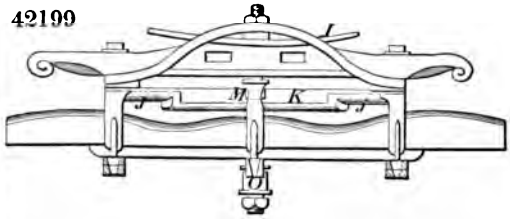

42200

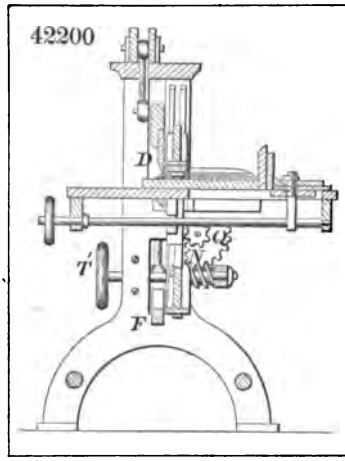

42201

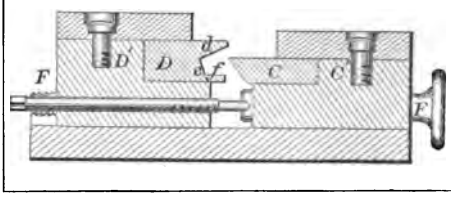

42204

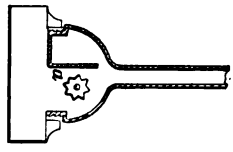

42202

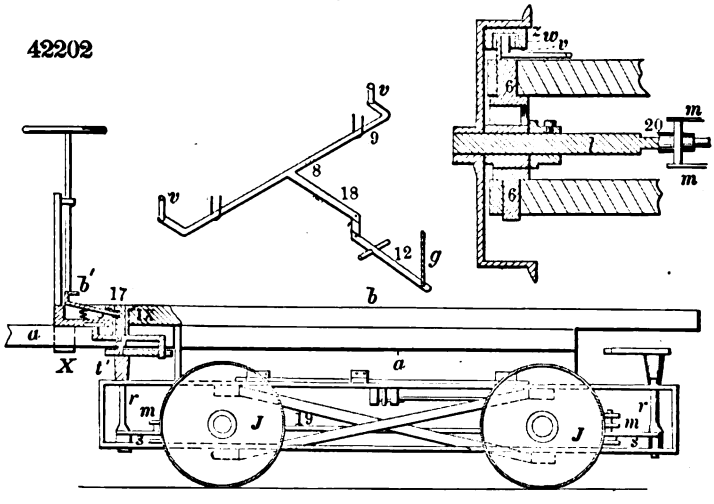

42203

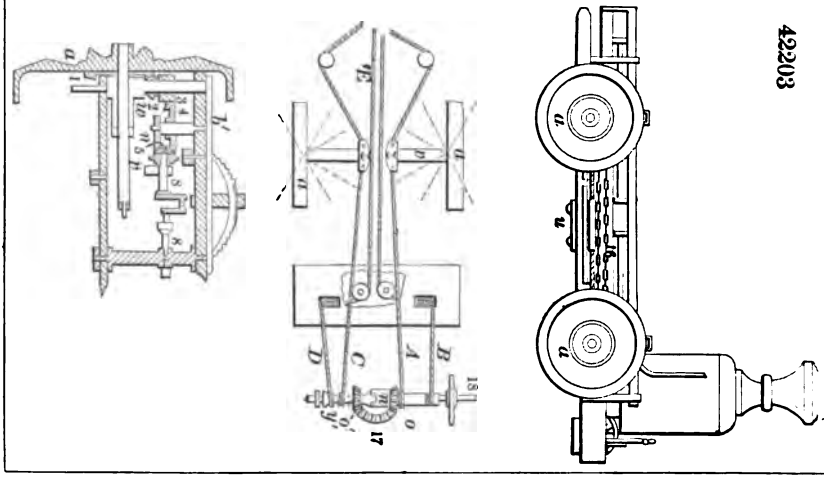

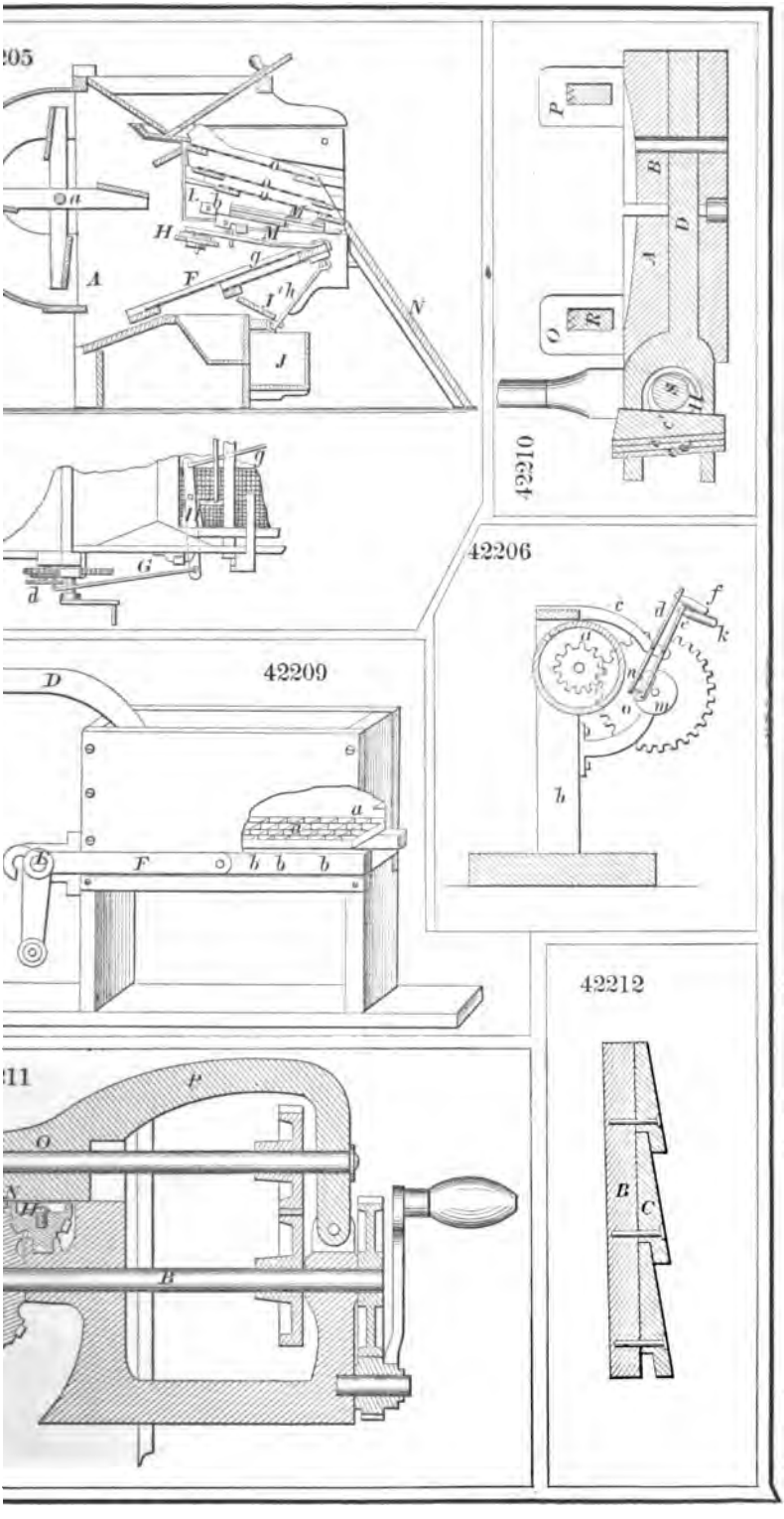
205
42210
42206
42209
42212
211

42213

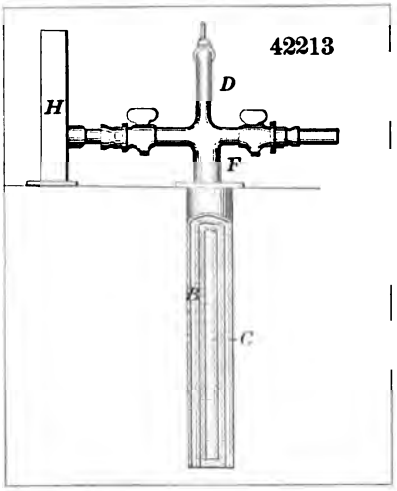

42214

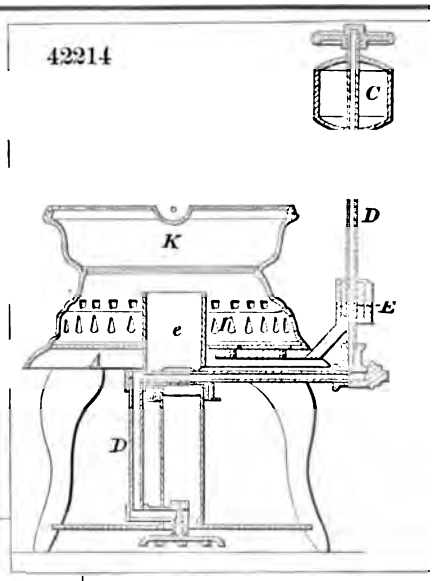

42216

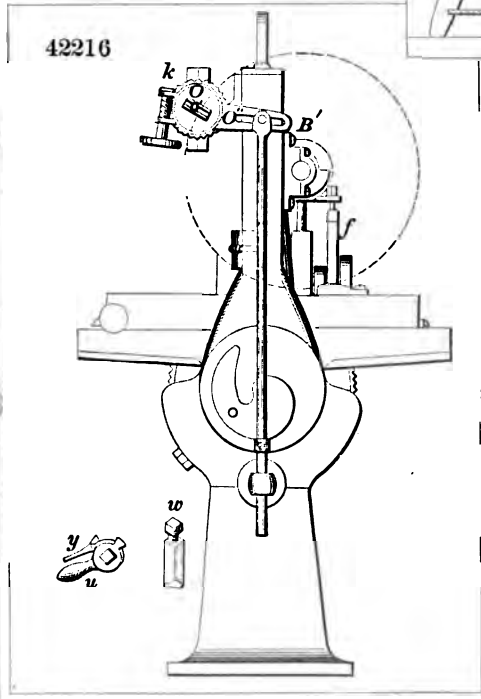

42215

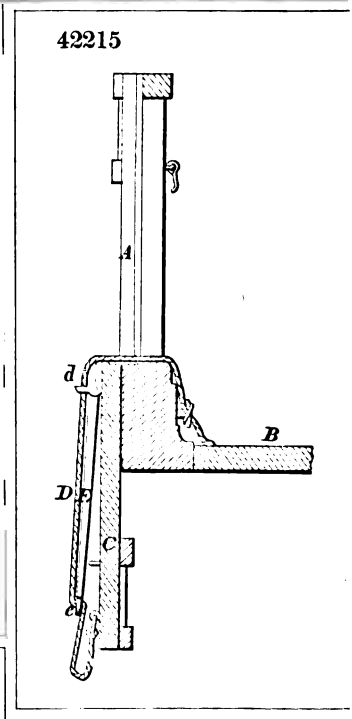

42217

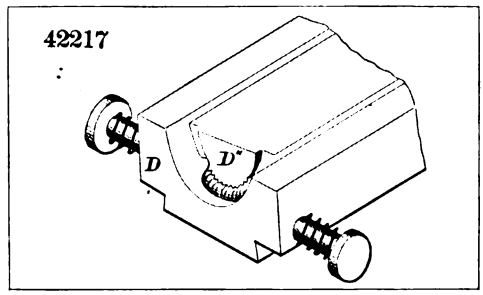

42218

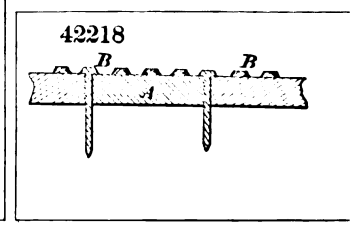

42219

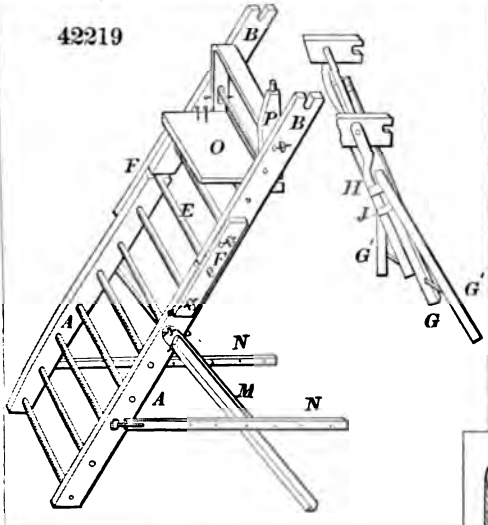

42221

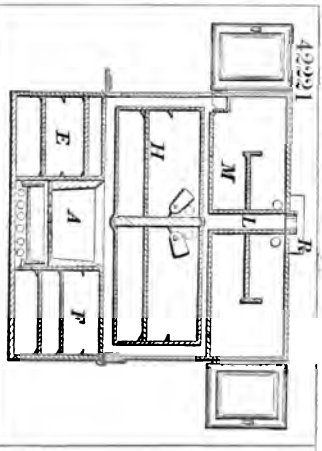

42220

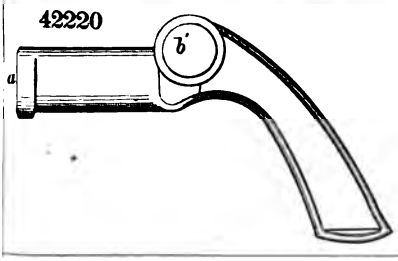

42223

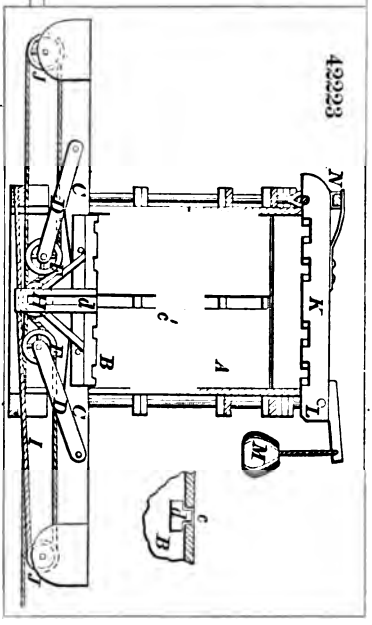

42225

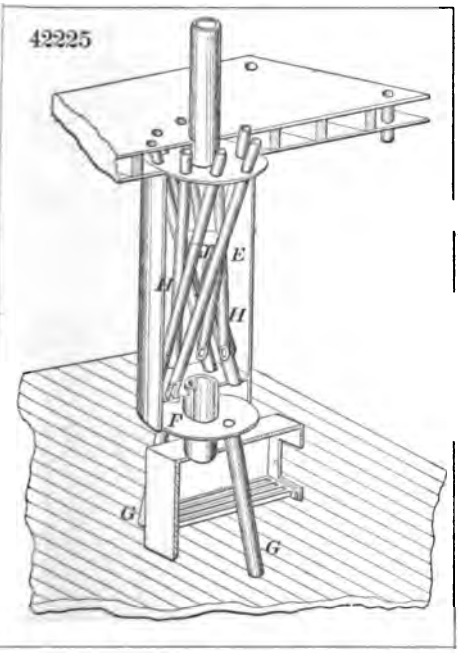

42222

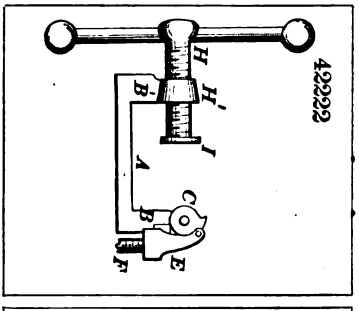

42224

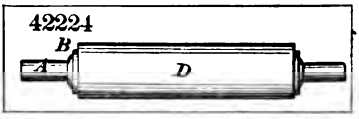

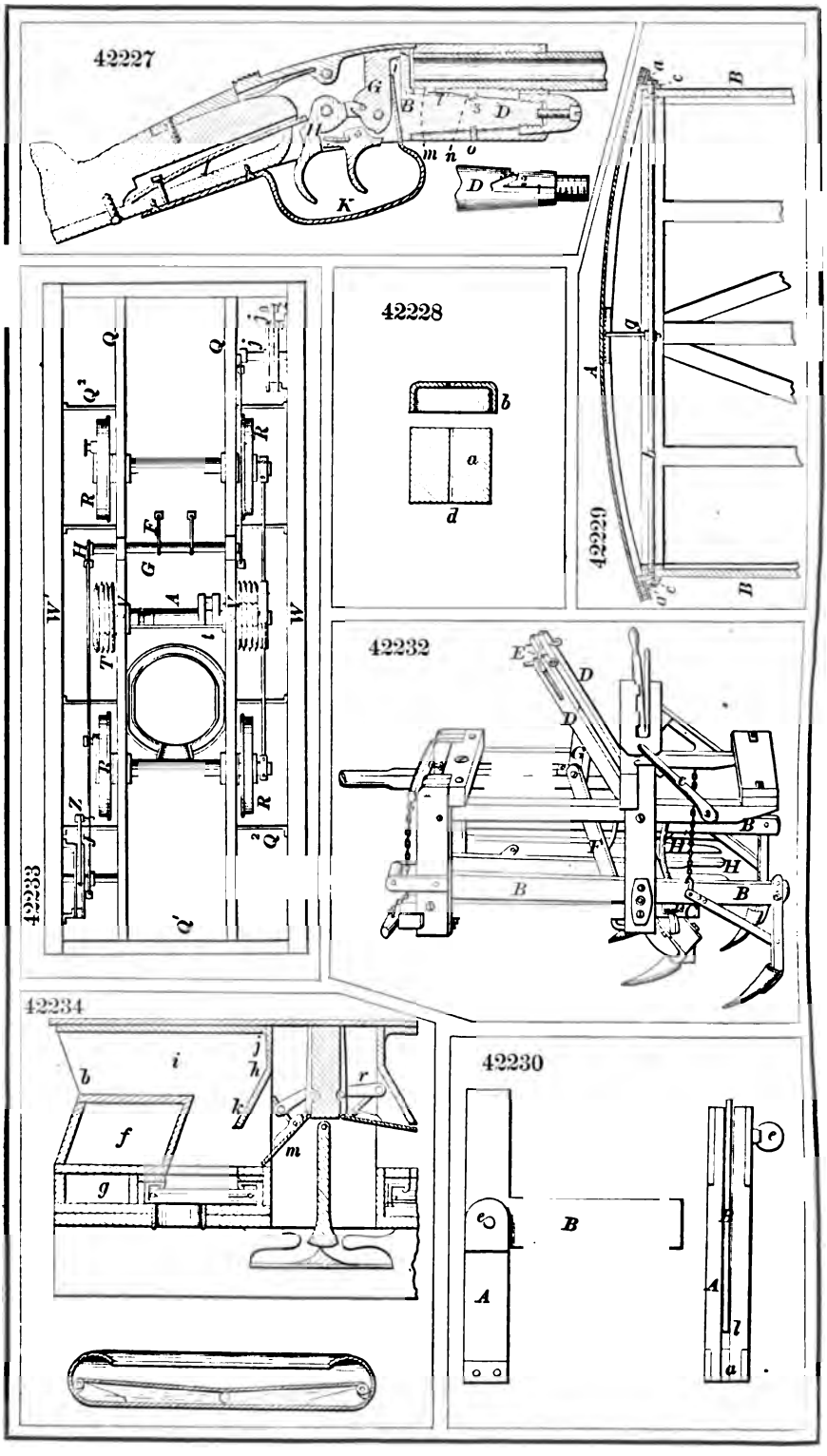
42227
42228
42229
42232
42233
42234
42230

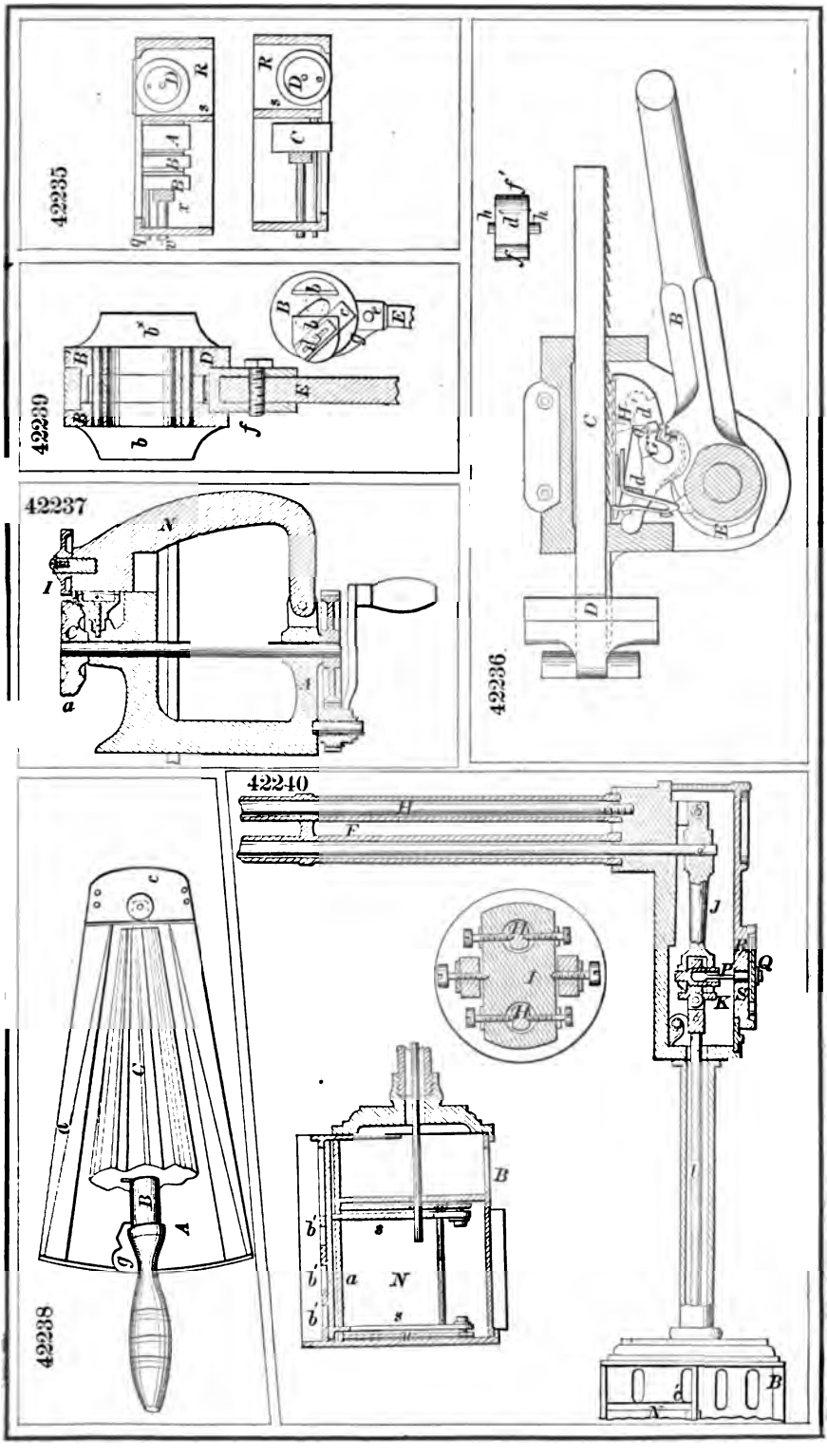
42235
42239
42237
42236
42240
42238

42241

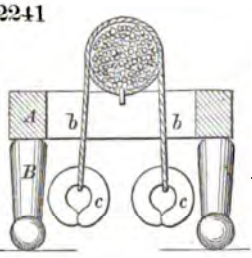

42242

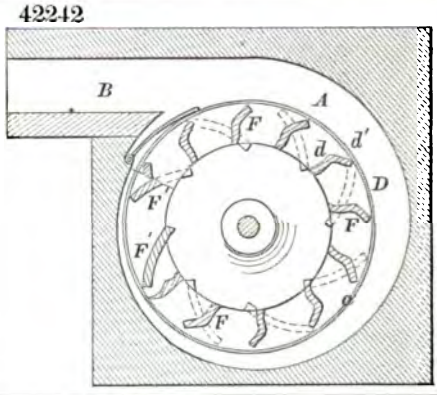

42243

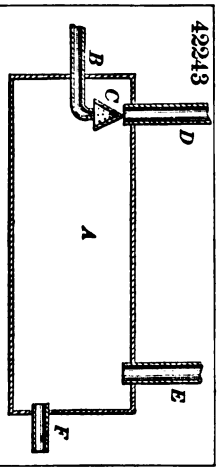

42244

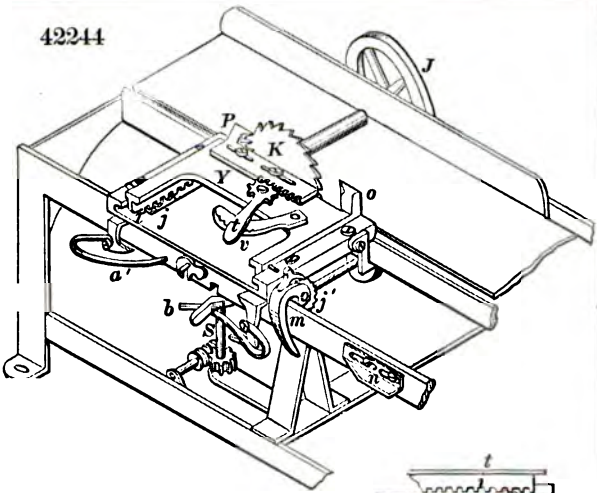

42245

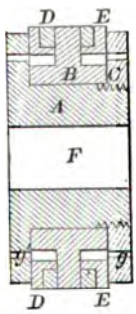

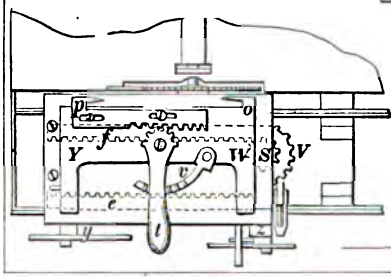

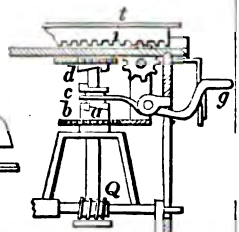

42246

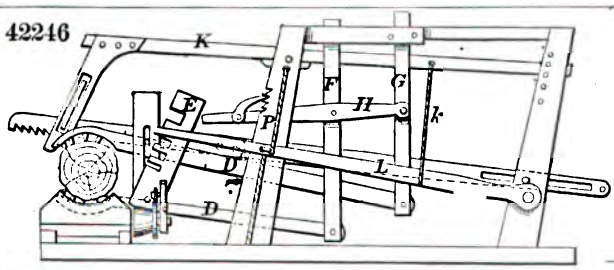

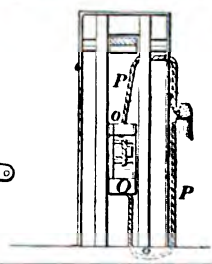

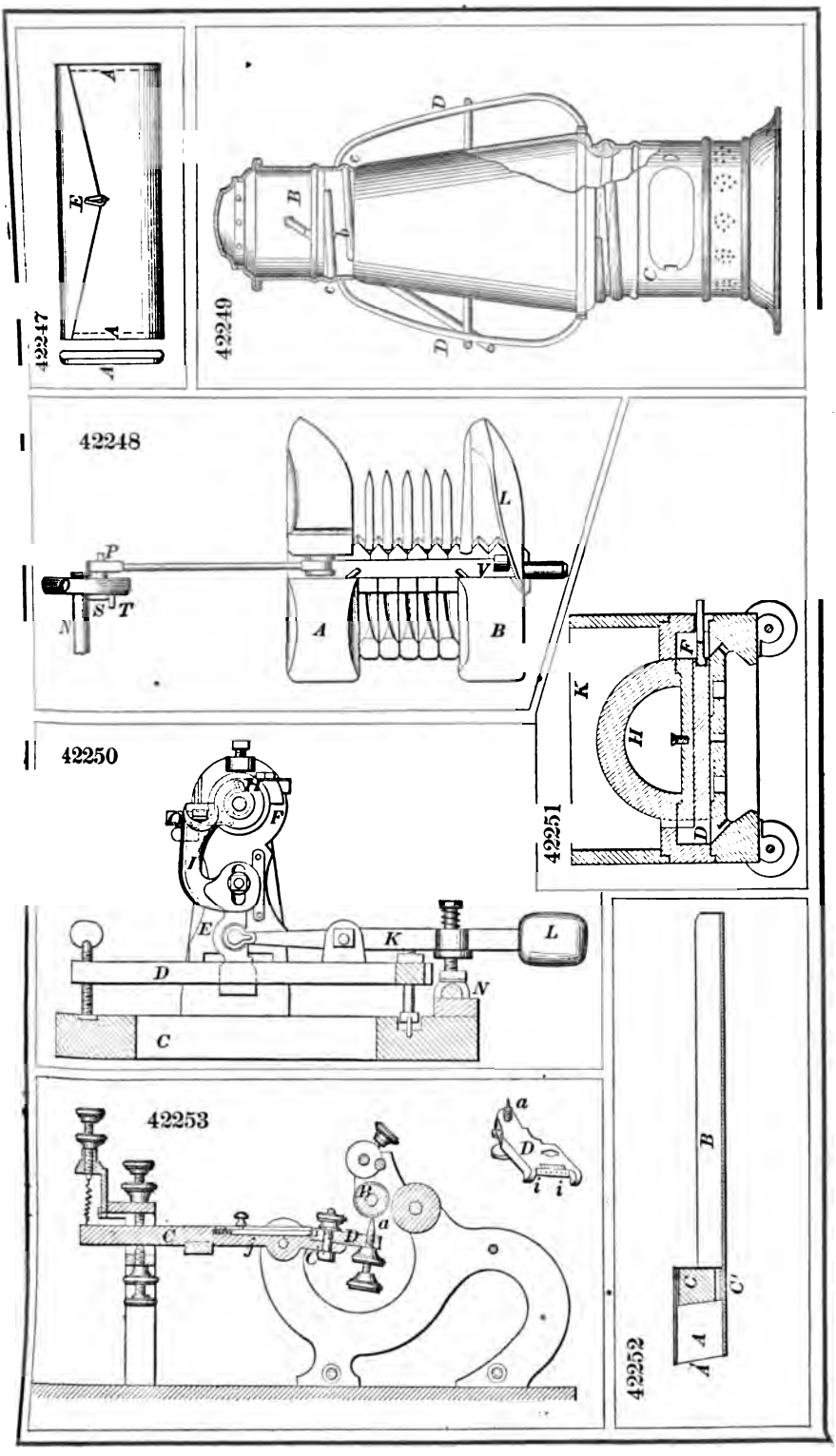
42247
42249
42248
42250
42251
42252
42253

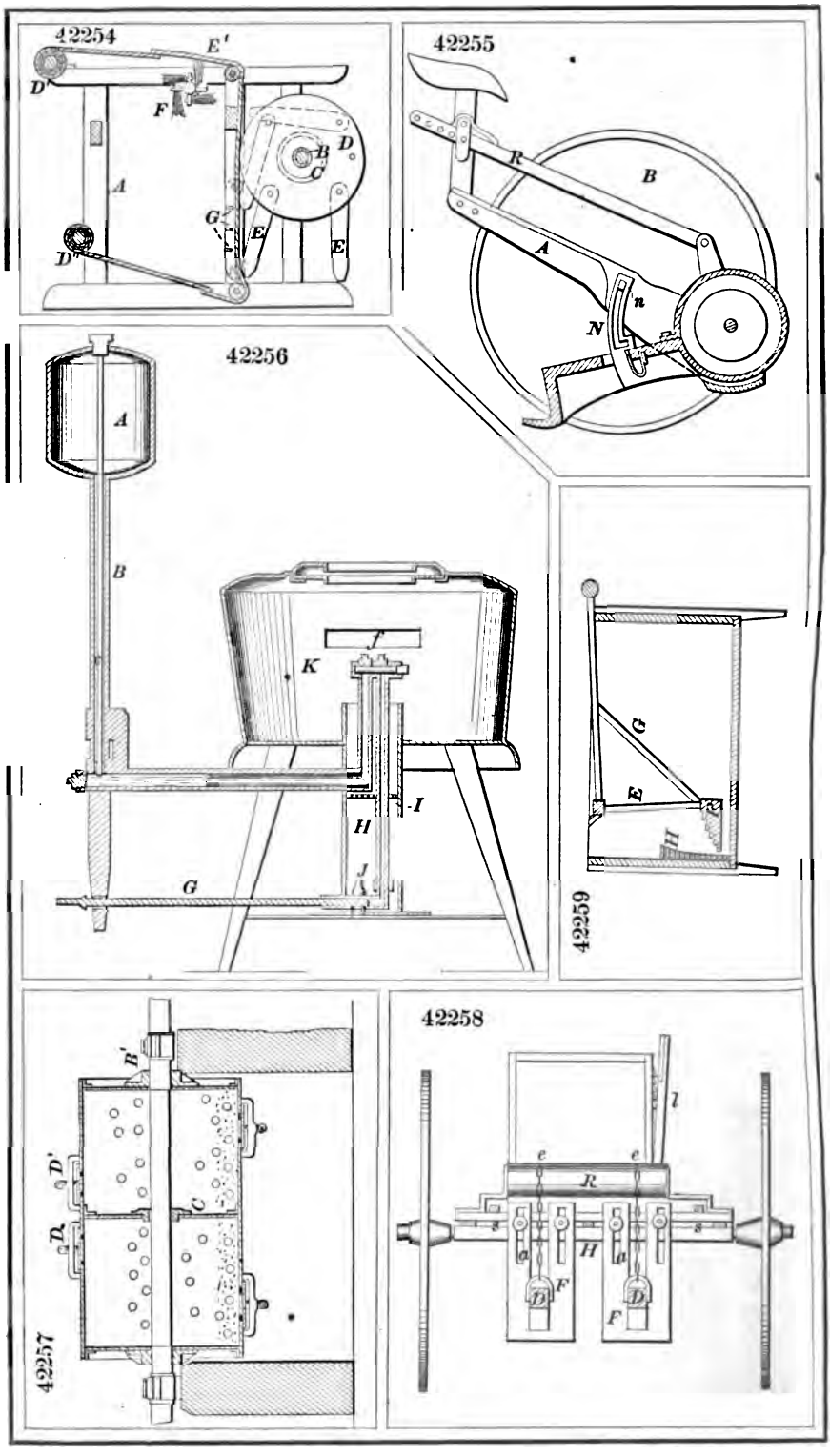
42254
E'
D'
F
D
B
C
A
G
E
E
D'
42255
R
B
A
n
N
42256
A
B
K
I
H
J
G
42259
G
E
H
42257
B'
D'
C
D
42258
l
e
e
R
s
s
a
a
H
F
D
D
F

42260

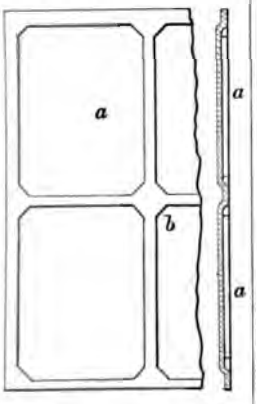

42263

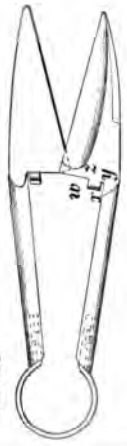

42264

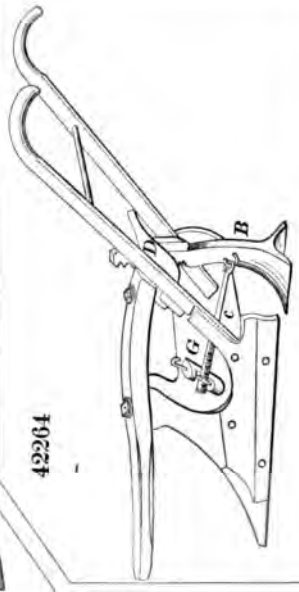

42261

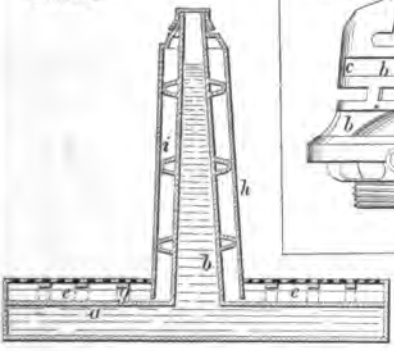

42262

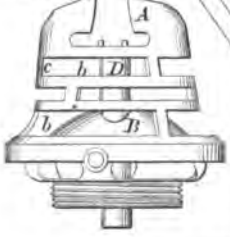

42268

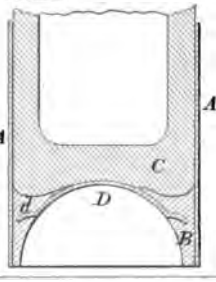

42266

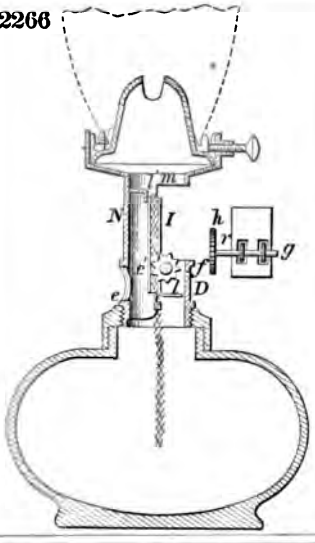

42267

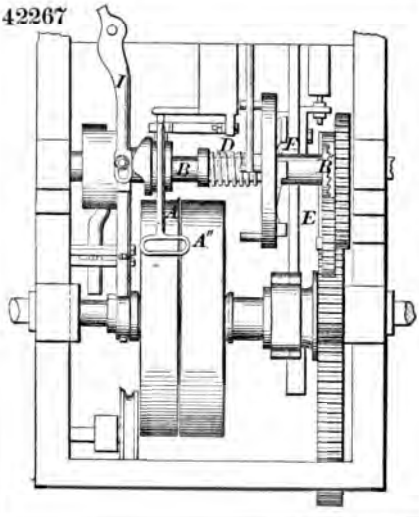

42269

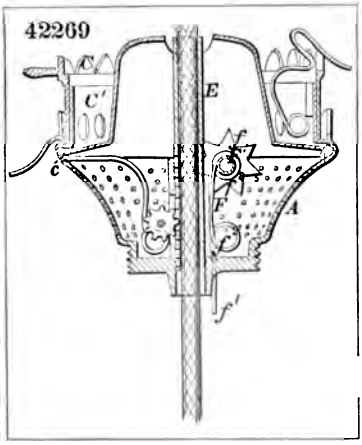

42272

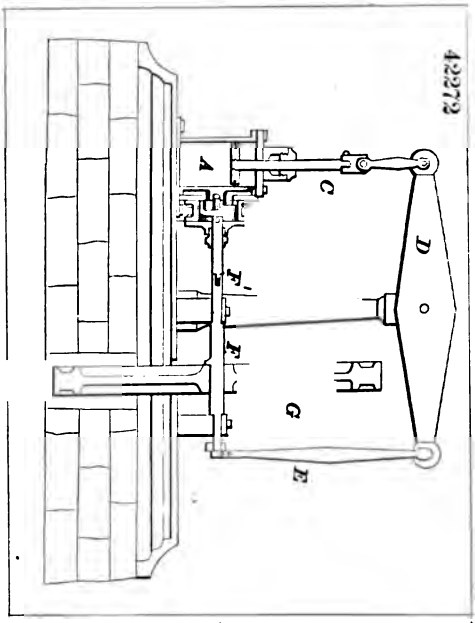

42271

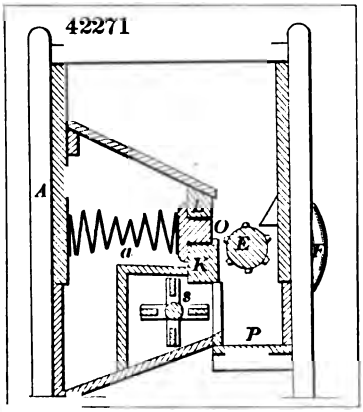

42275

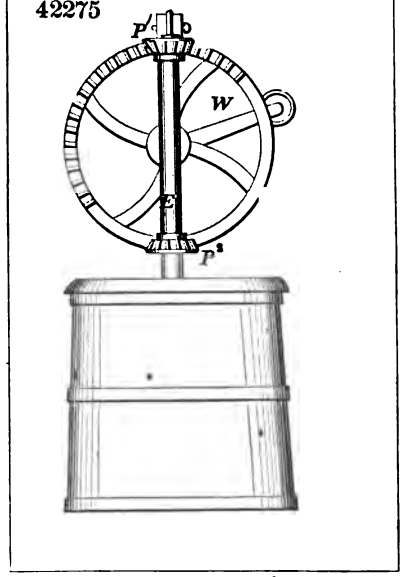

42273

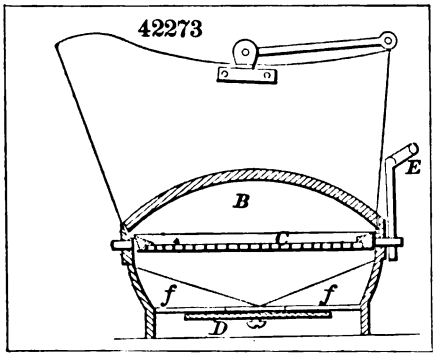

42274

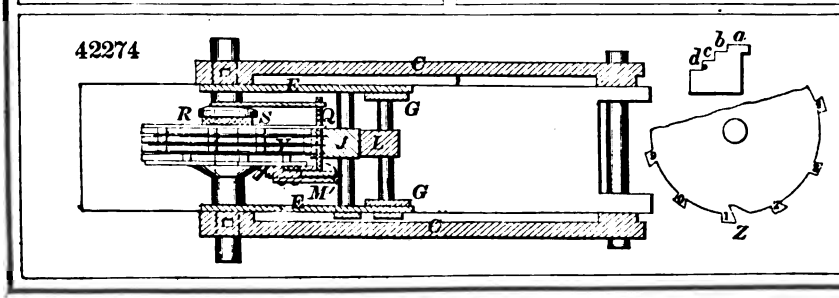

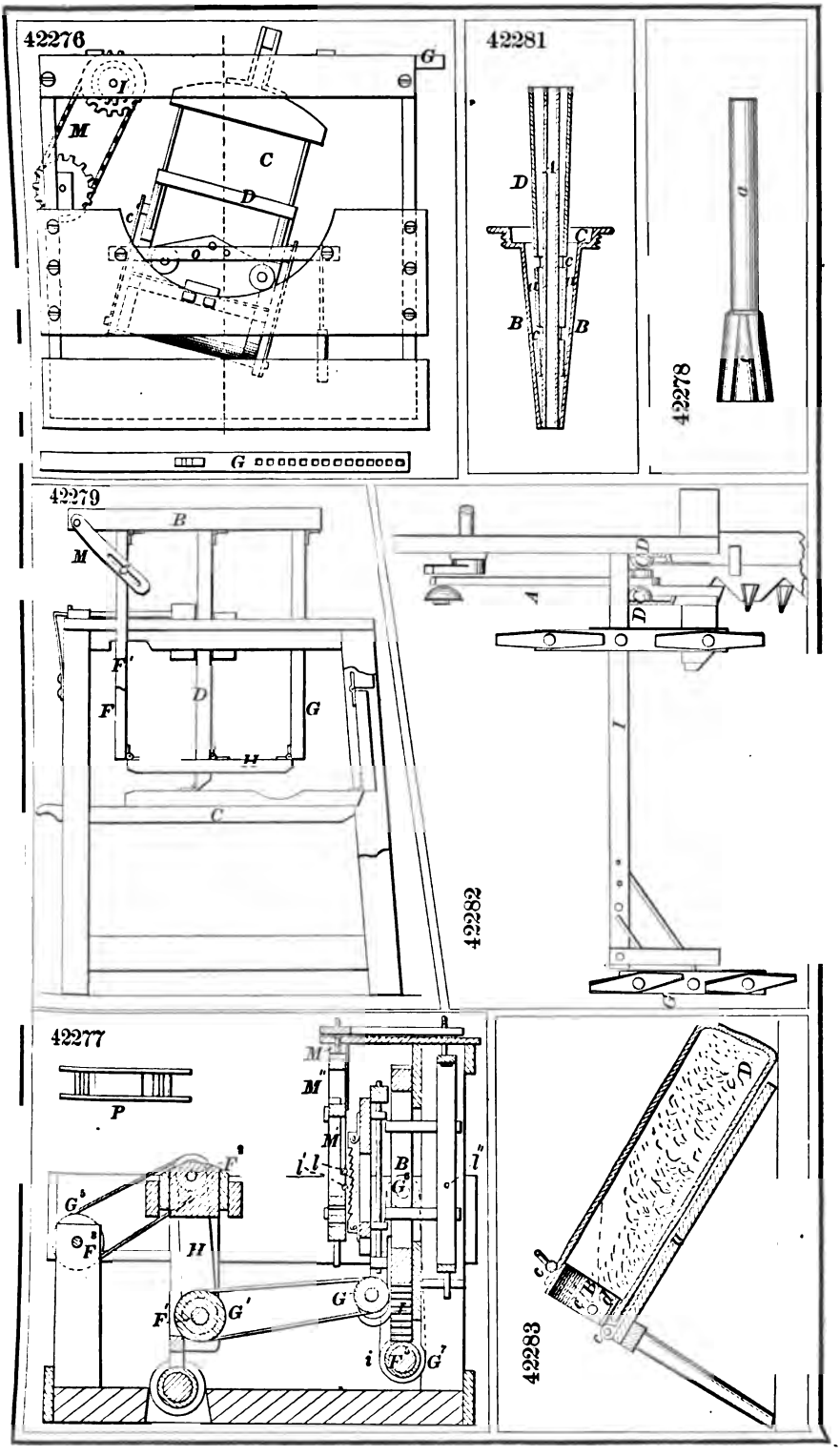
42276
42281
42278
42279
42282
42277
42283

42284

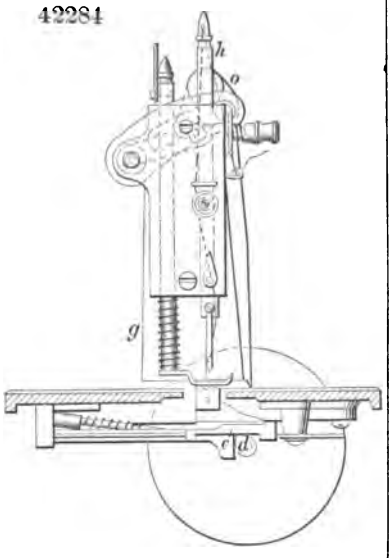

42285

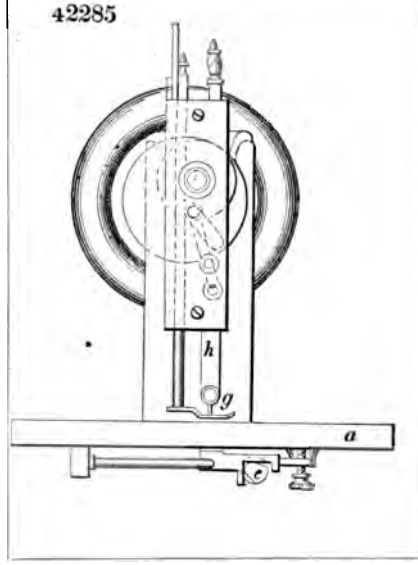

42286

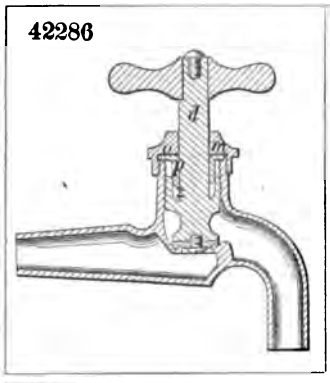

42287

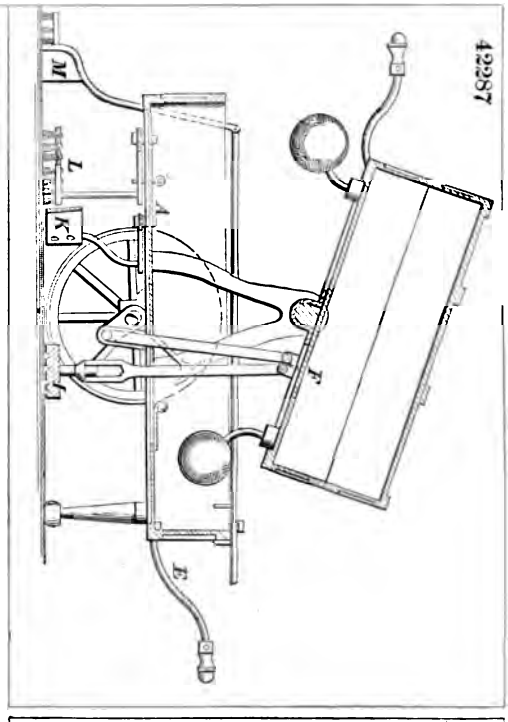

42289

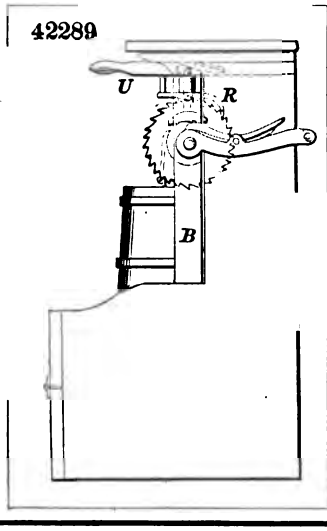

42288

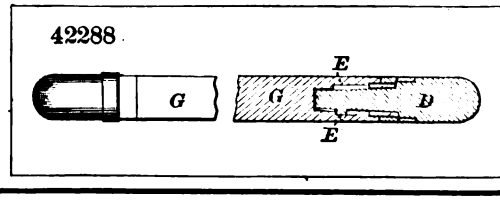

42290

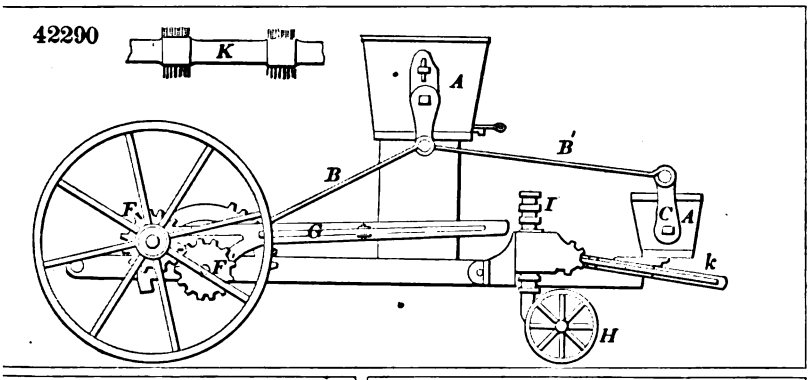

42291

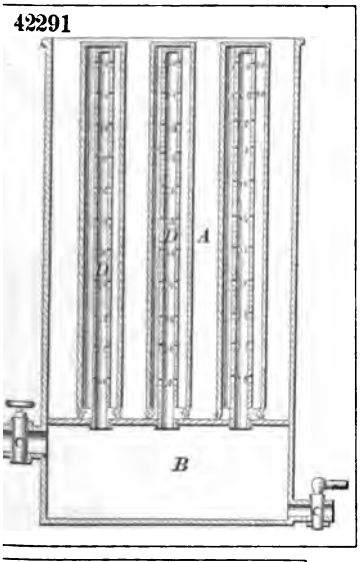

42292

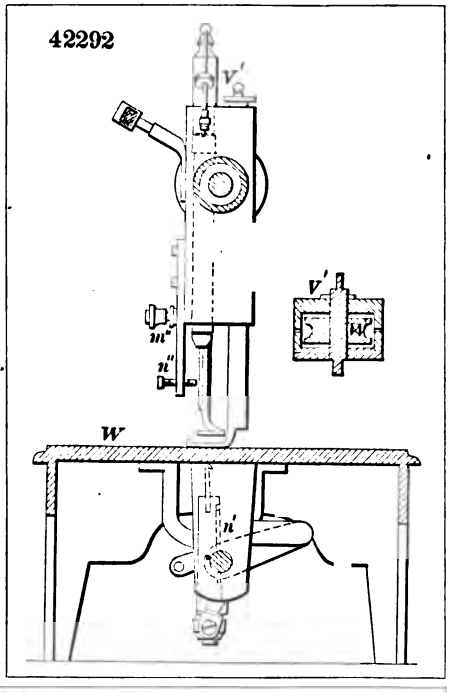

42293

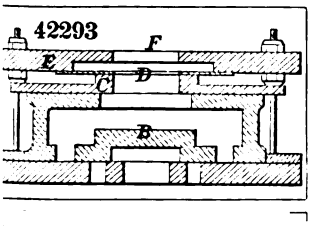

42294

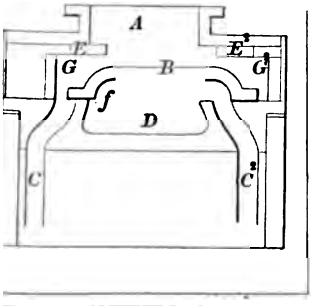

42296

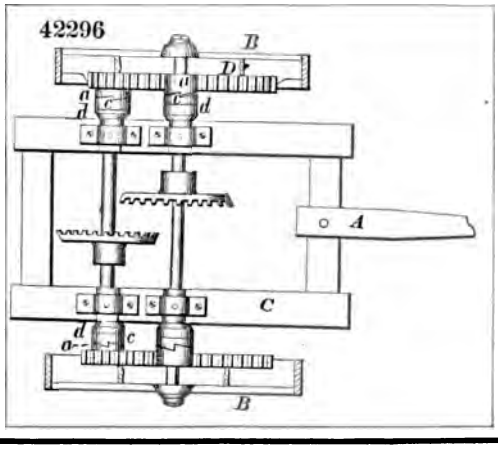

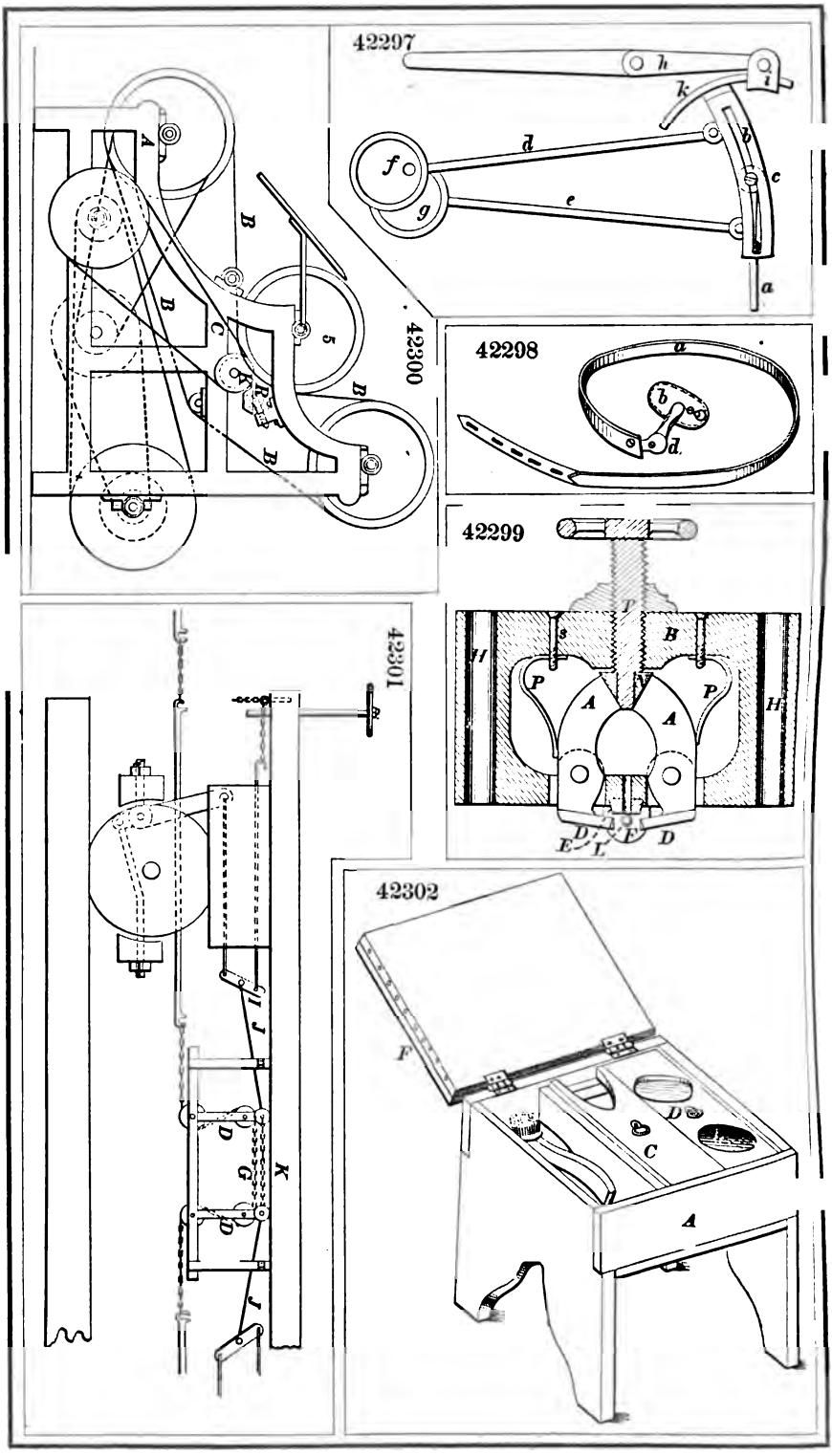
42297
42300
42298
42299
42301
42302

42303

42304

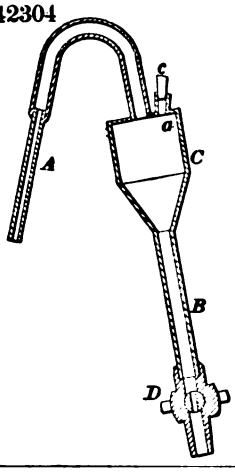

42305

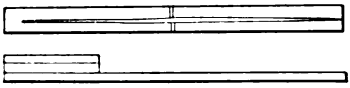

42307

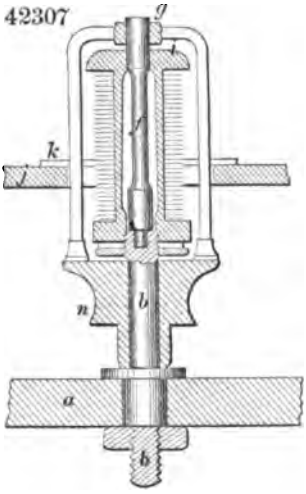

42306

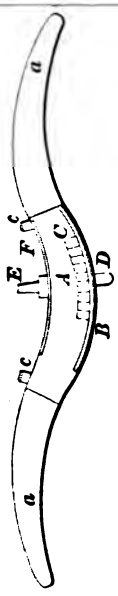

42308

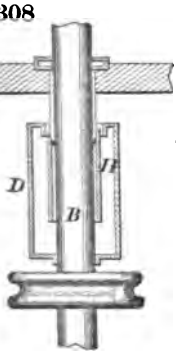

42310

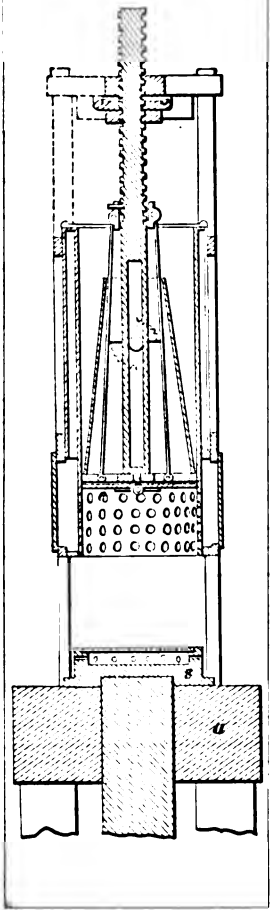

42309

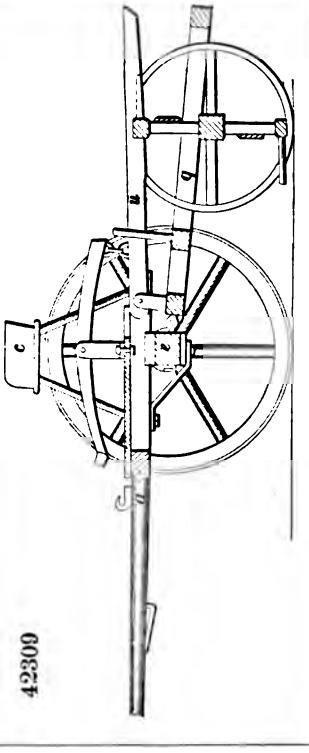

42312

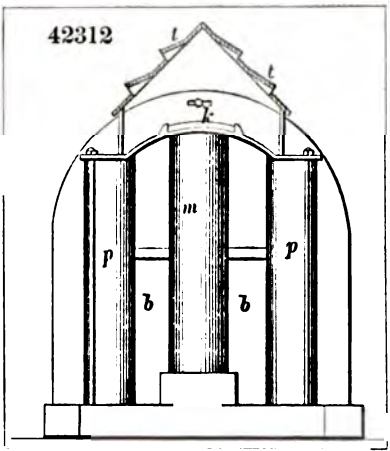

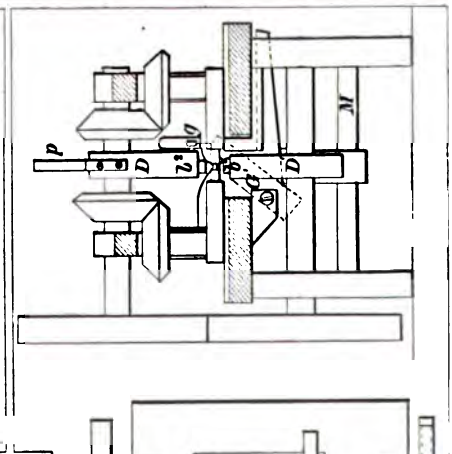

42315

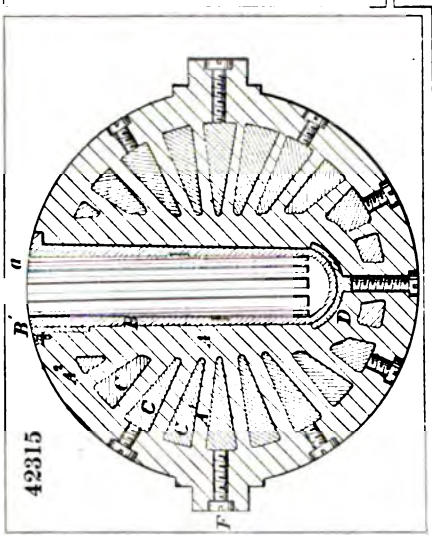

42314

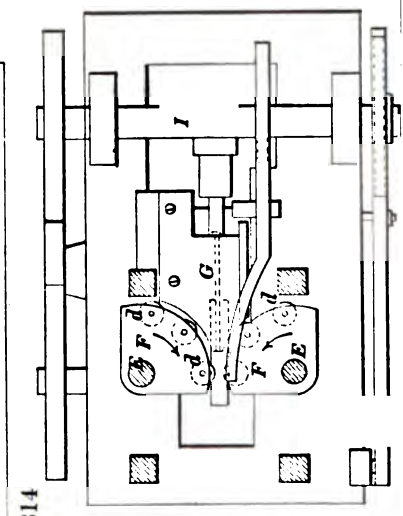

42313

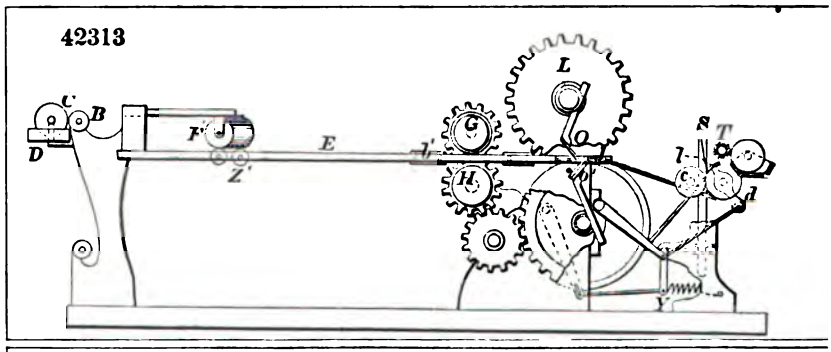

42316

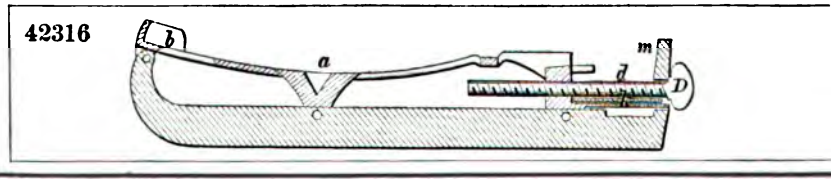

42317

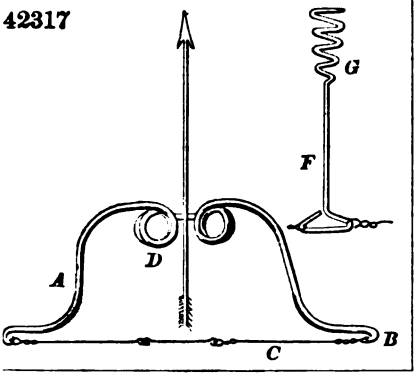

42318

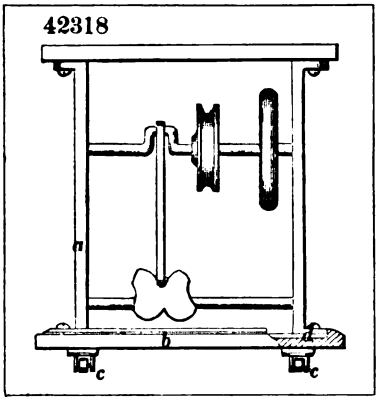

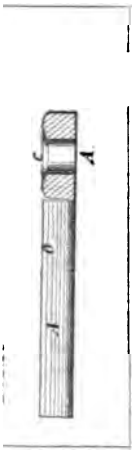

42321

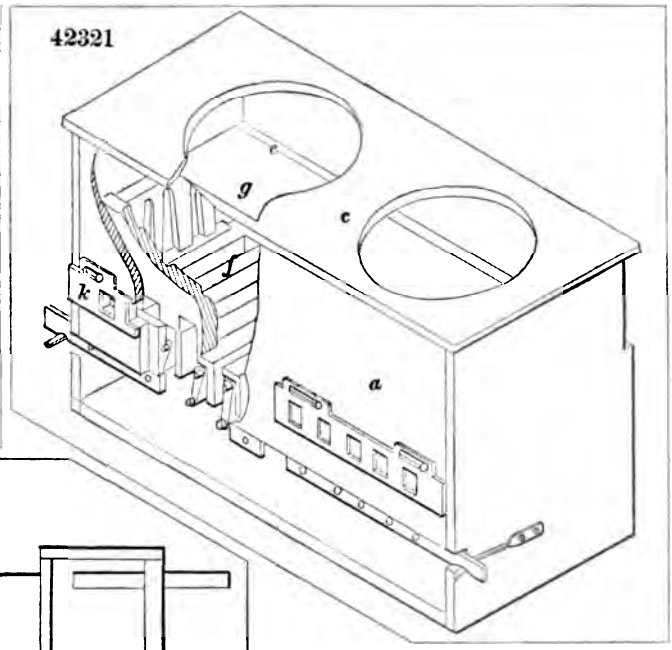

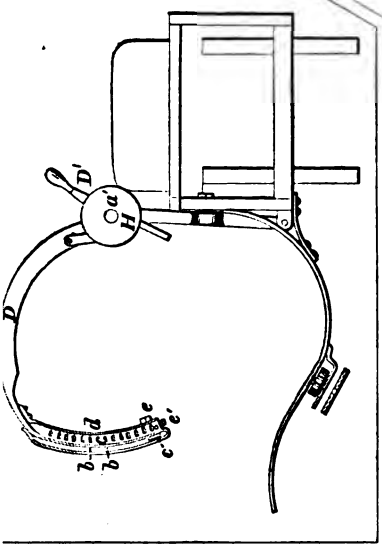

42323

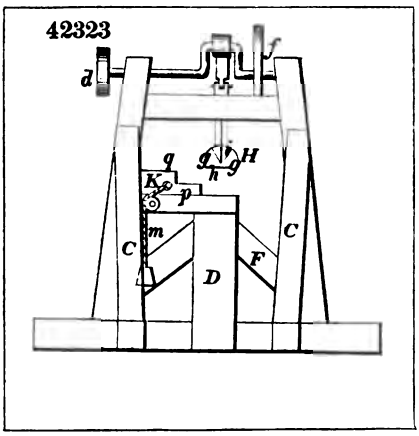

42324

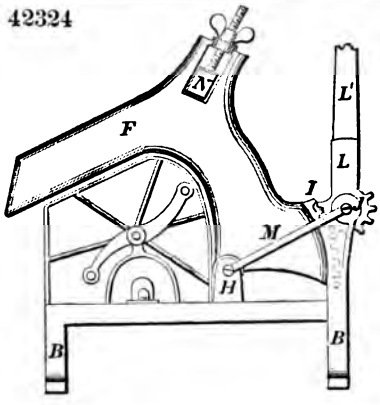

42325

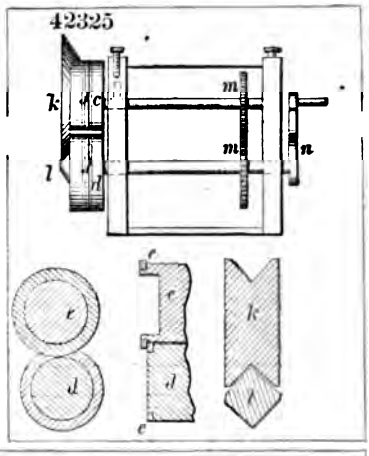

42326

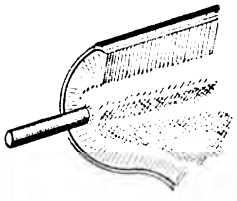

42327

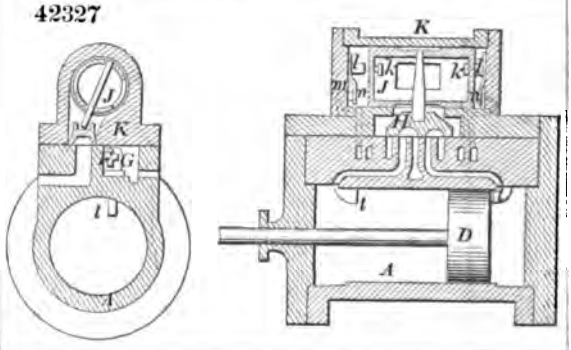

42330

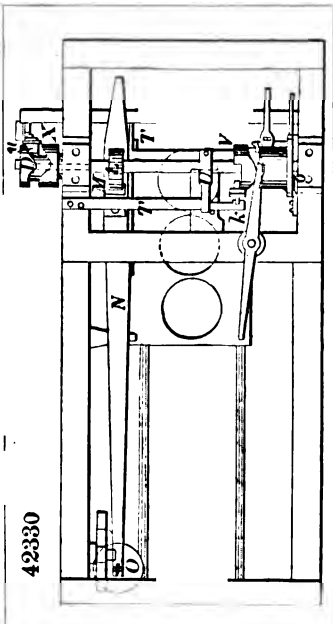

42329

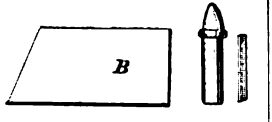

42328

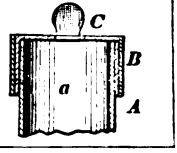

42331

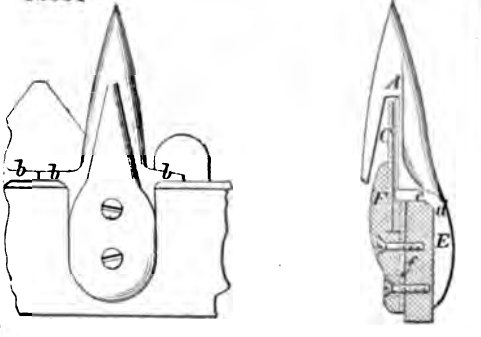

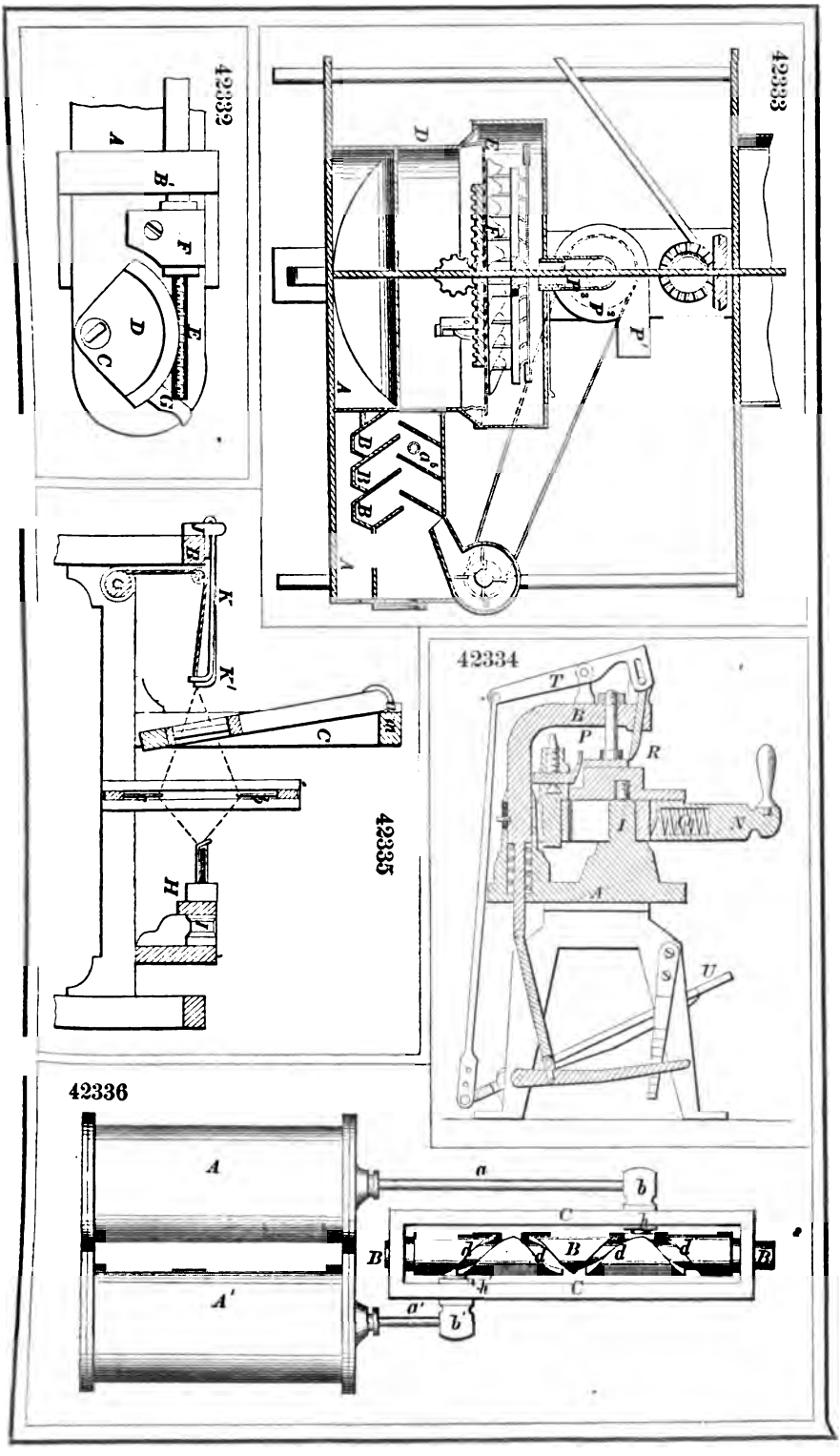
42332
42333
42334
42335
42336

42337

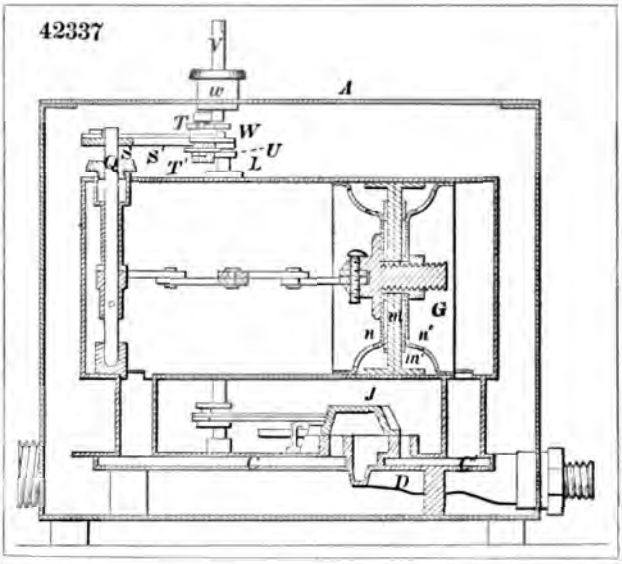

42339

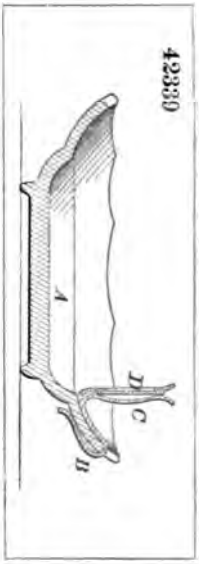

42338

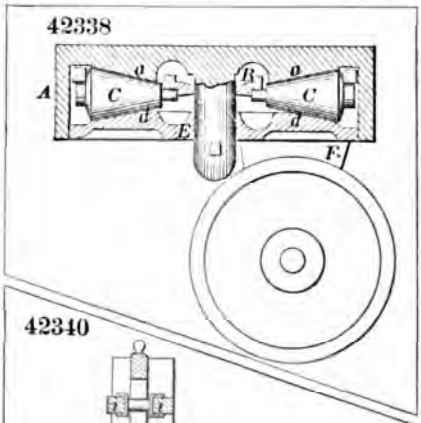

42341

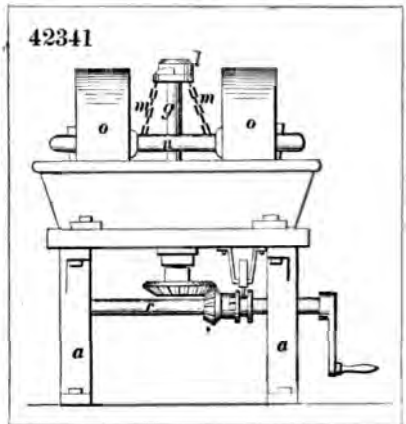

42340

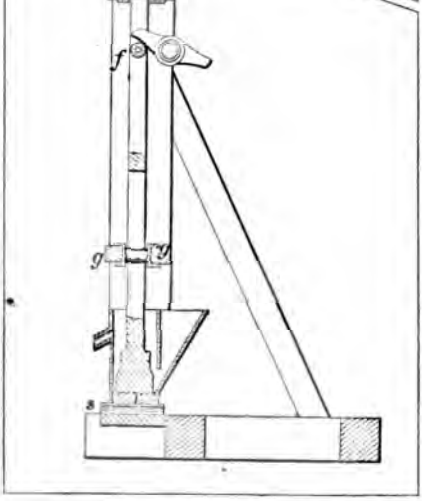

42342

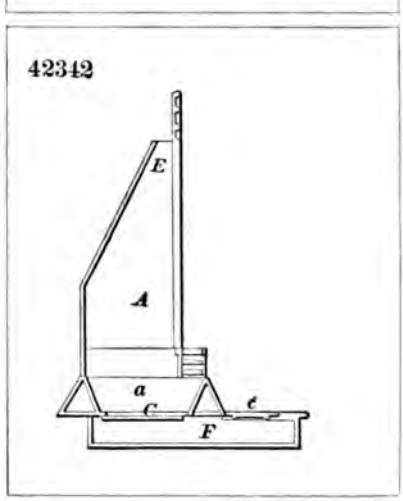

42343

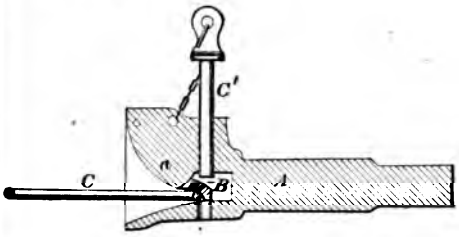

42344

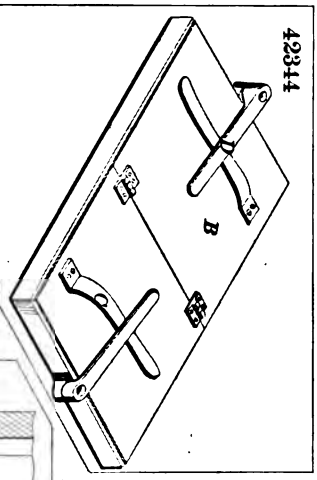

42346

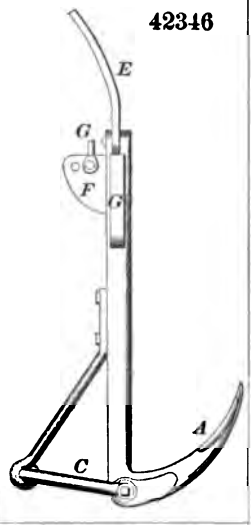

42318

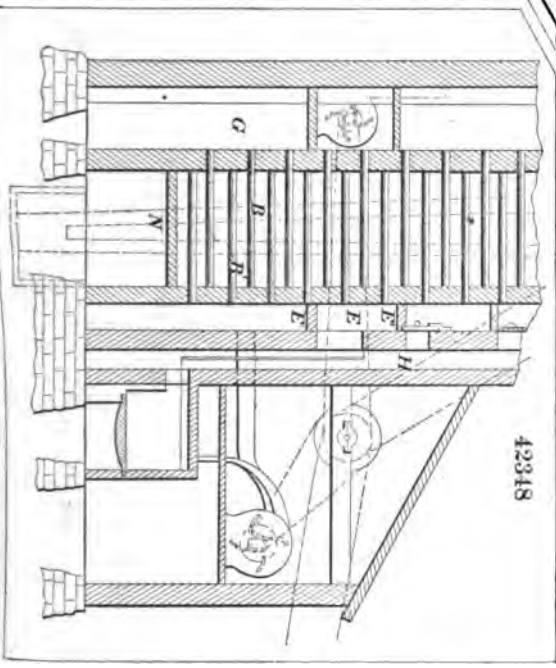

42345

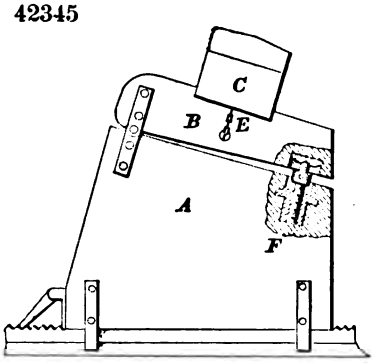

42349

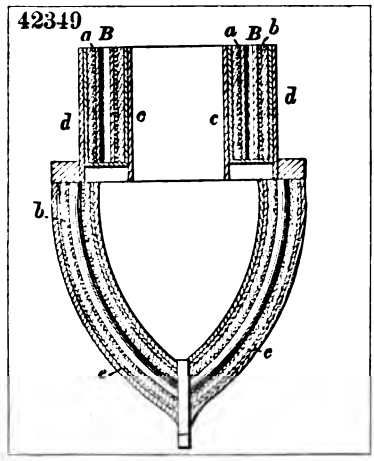

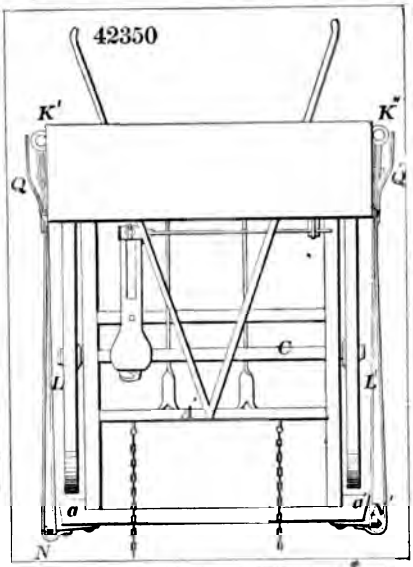
42350
K'
K
Q
Q
C
L
L
a
a'
N
N'

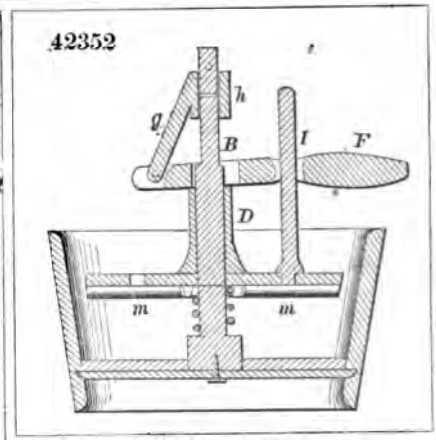
42352
h
g
B
I
F
D
m
m

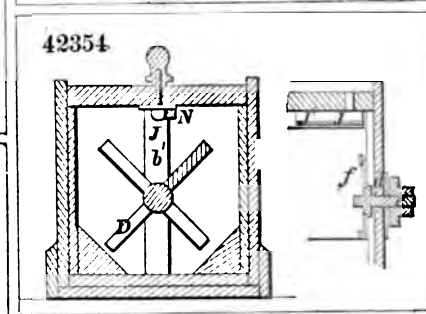
42354
N
J
b'
D
f

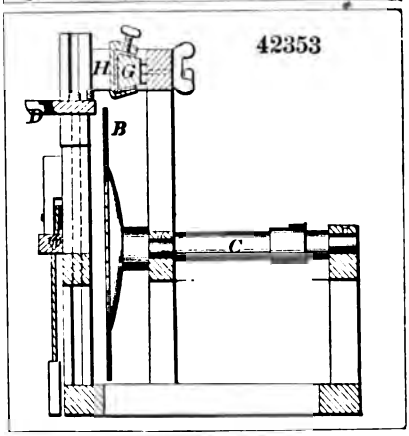
42353
H
G
D
B
C

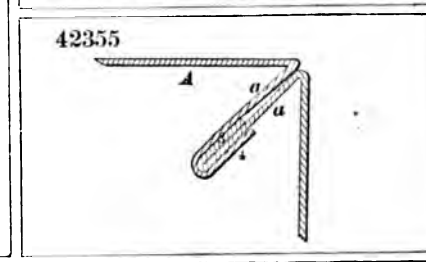
42355
A
a
a

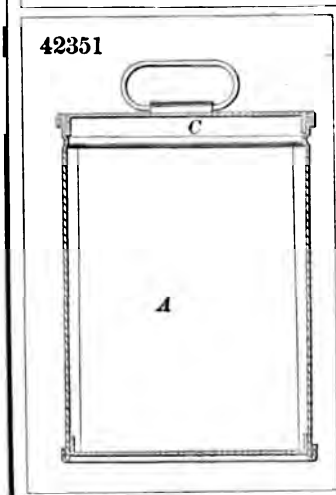
42351
C
A

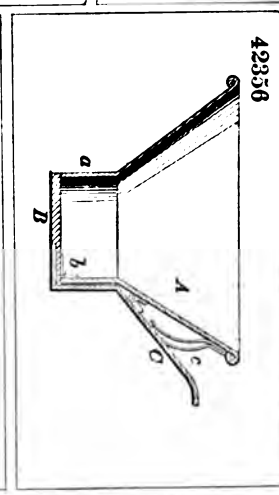
42356
a
B
b
A
C
c

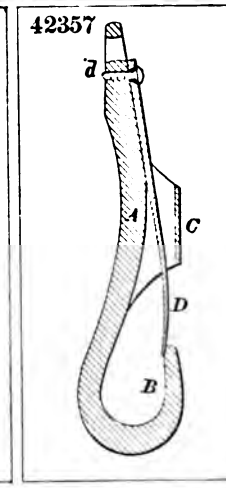
42357
p
A
C
D
B

42358

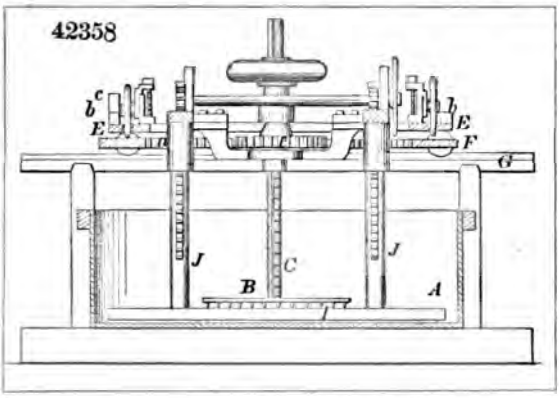

42359

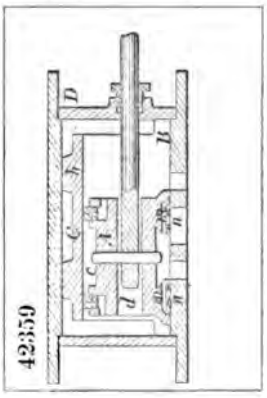

42360

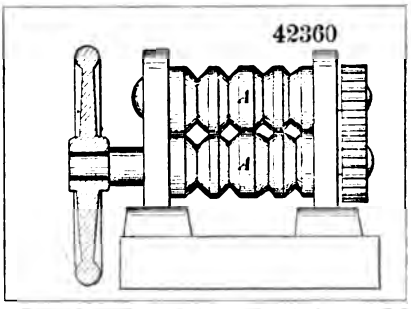

42361

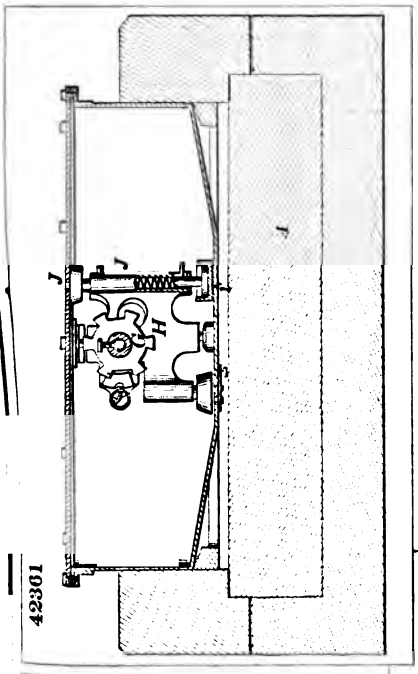

42363

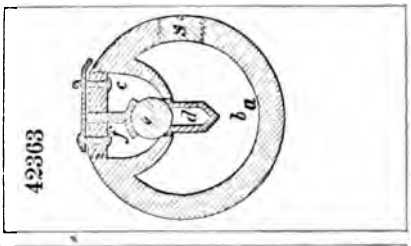

42362

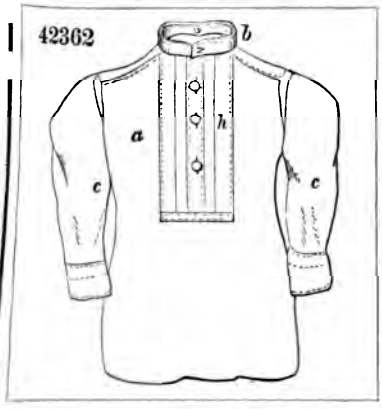

42364

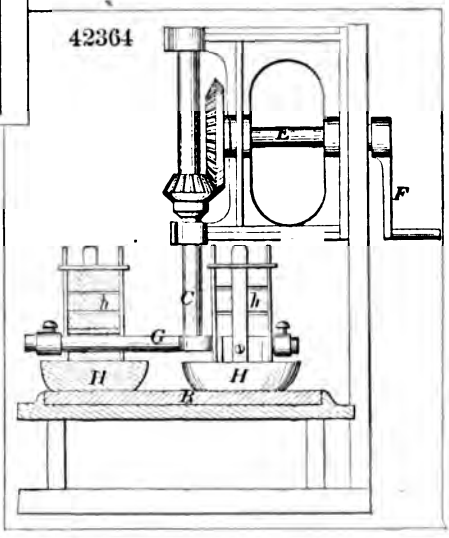

42365

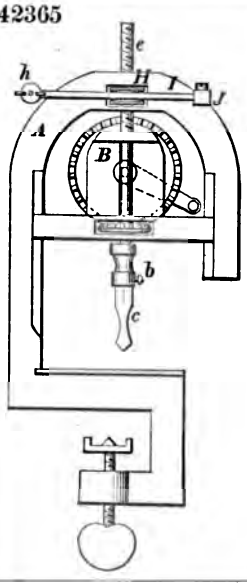

42366

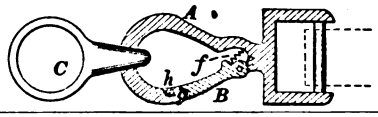

42367

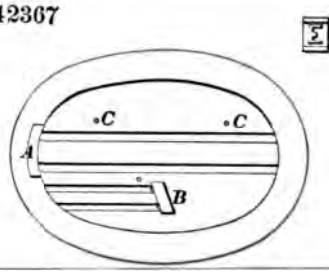

42369

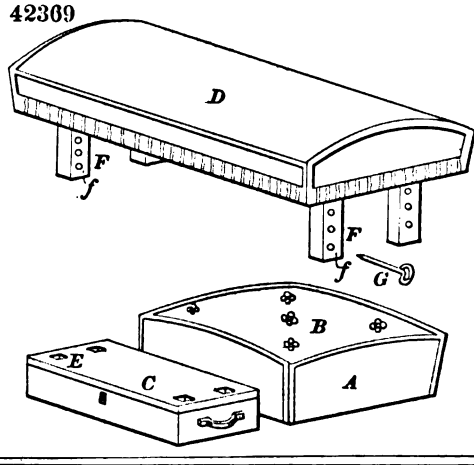

42368

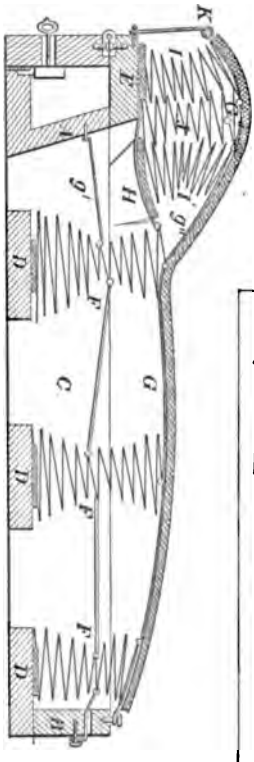

42370

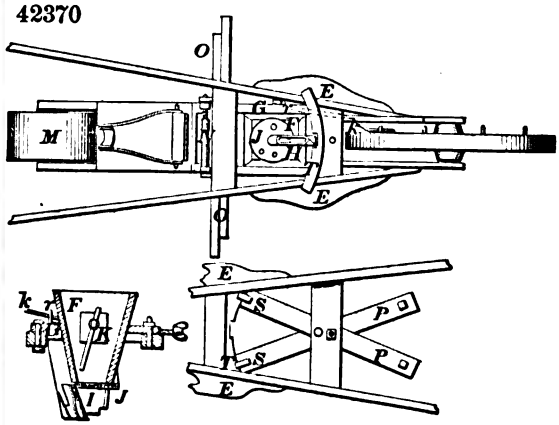

42371

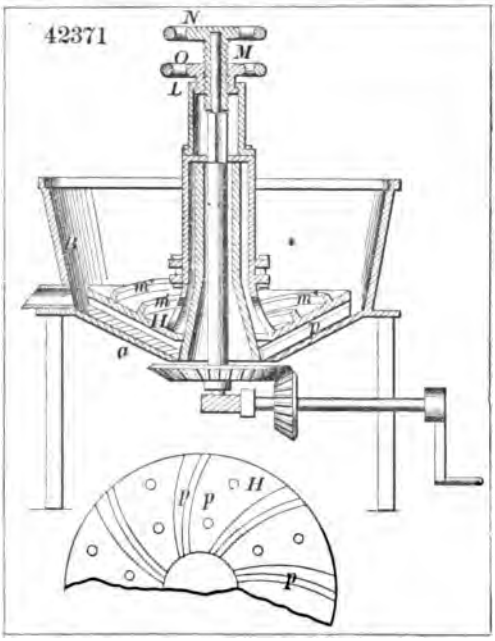

42375

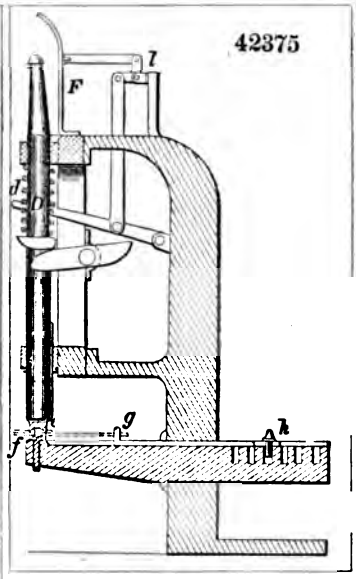

42372

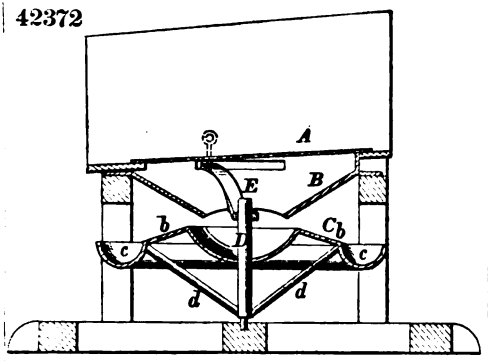

42373

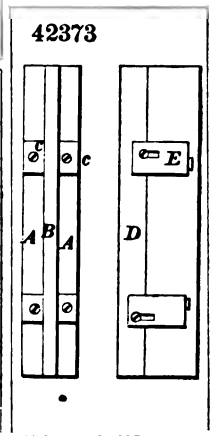

42374

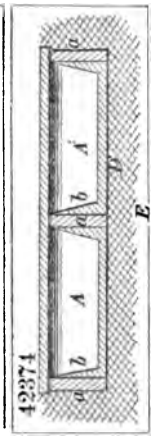

42376

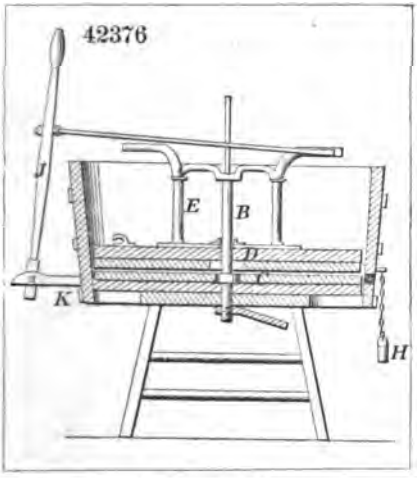

42377

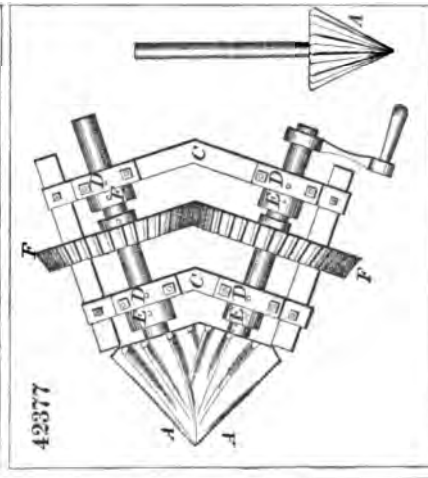

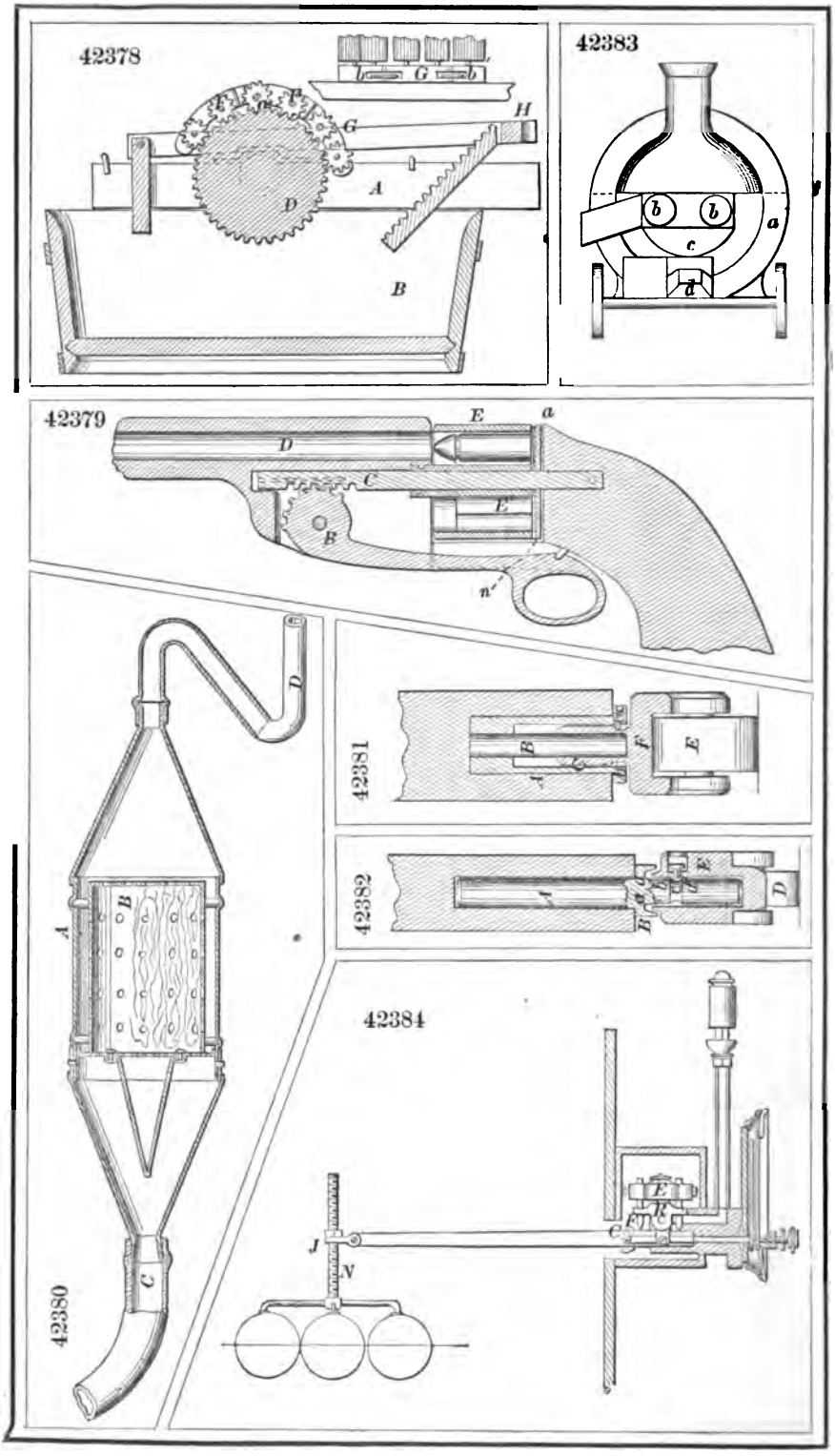
42378
42383
42379
42381
42382
42380
42384

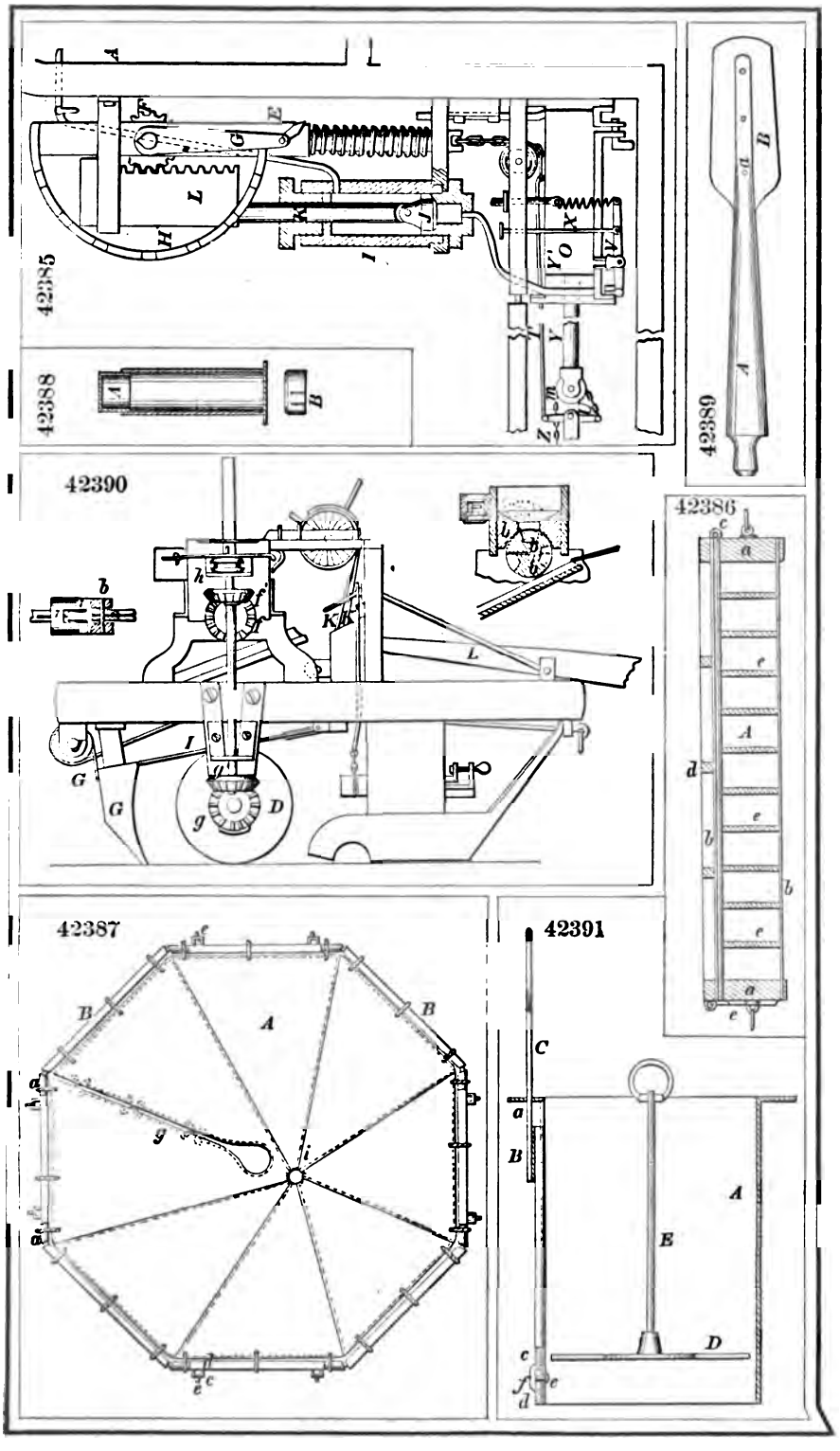
42385
42388
42389
42390
42386
42387
42391

42392

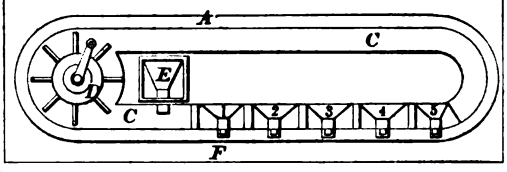

42394

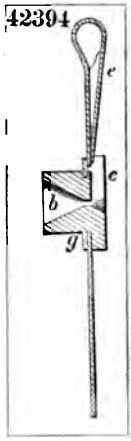

42397

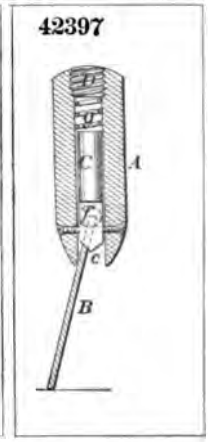

42395

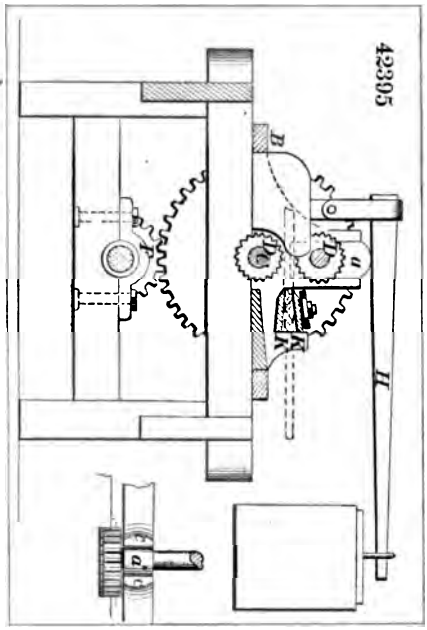

42398

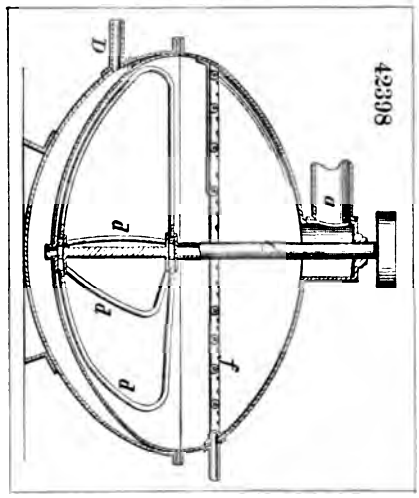

42393

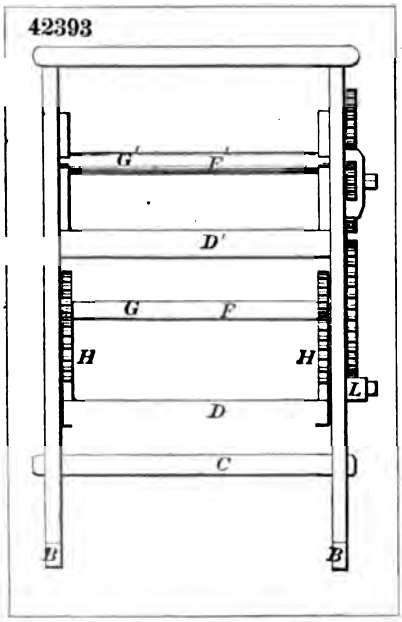

42399

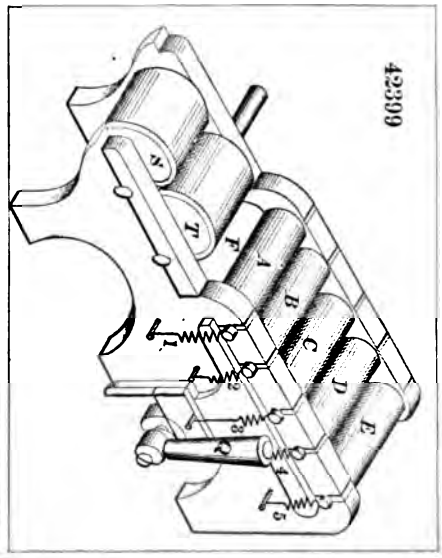

42400

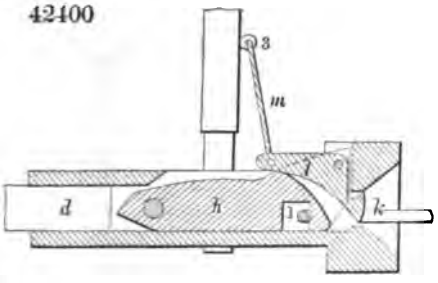

42406

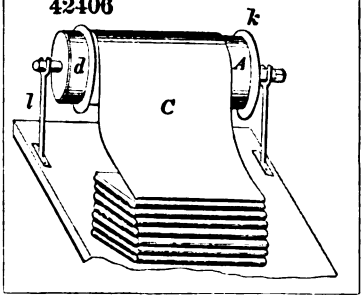

42401

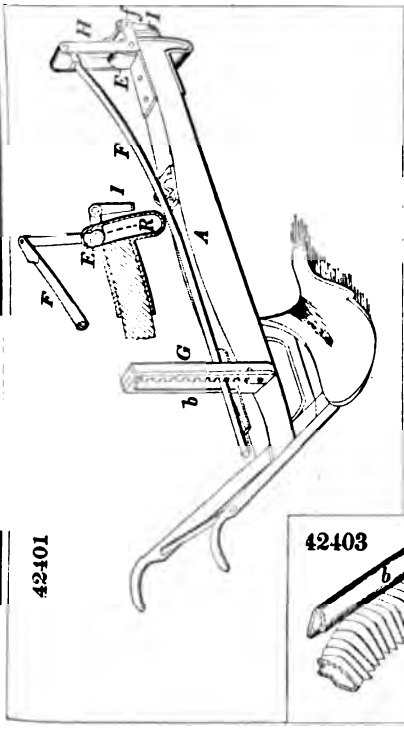

42402

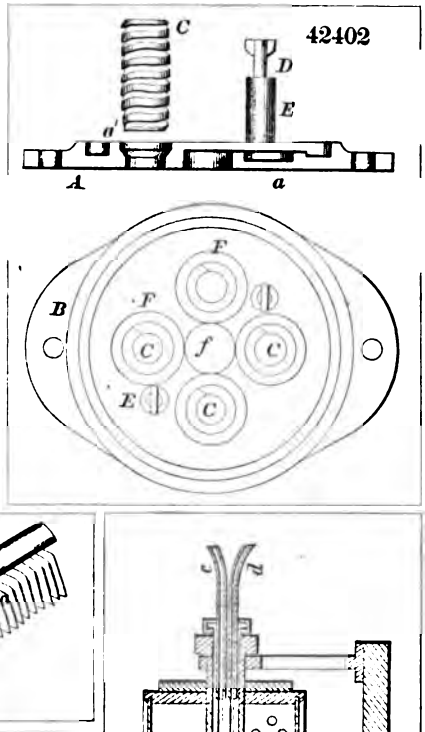

42403

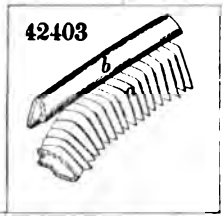

42404

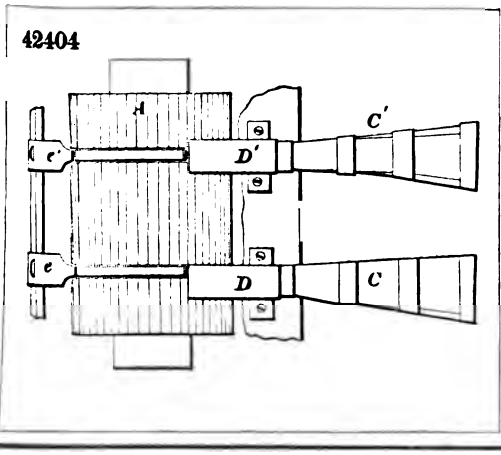

42407

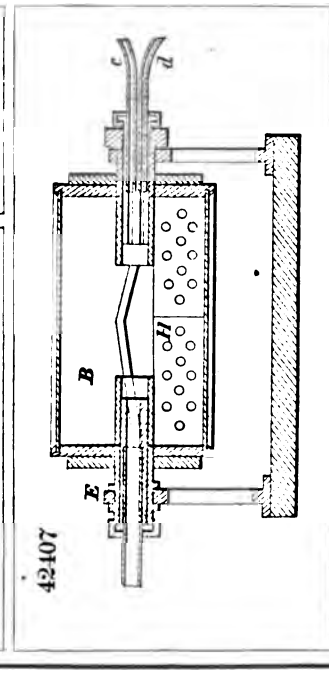

42392

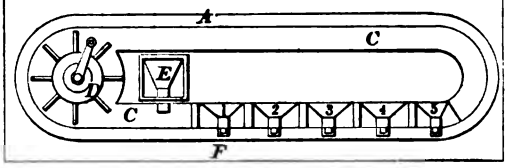

42394

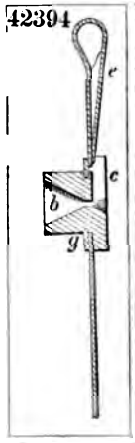

42397

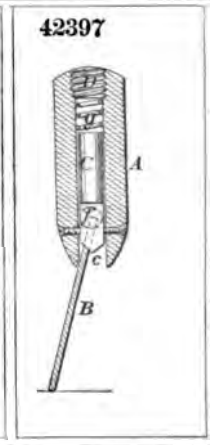

42395

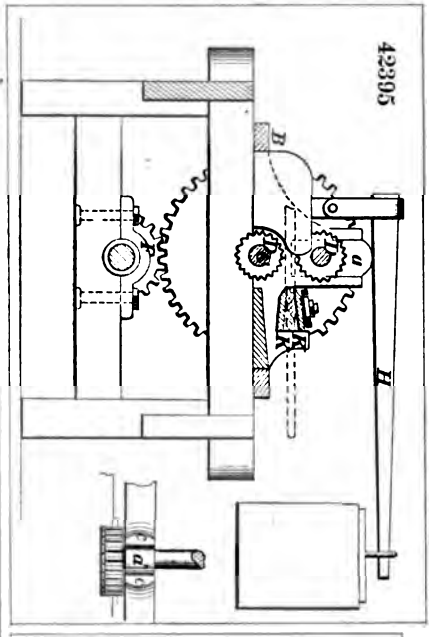

42398

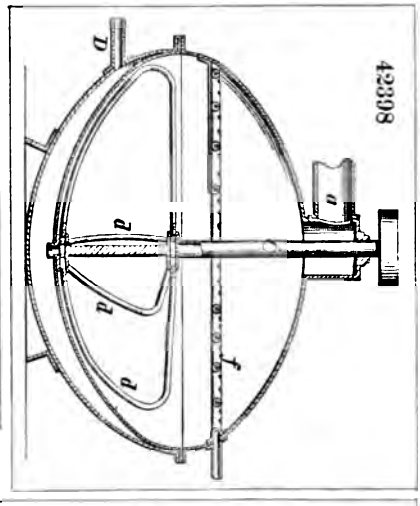

42393

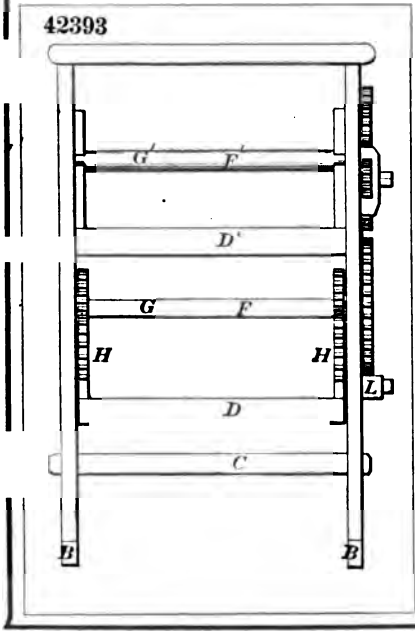

42399

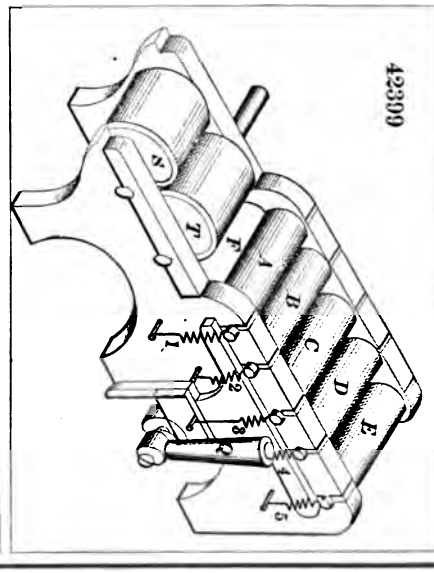

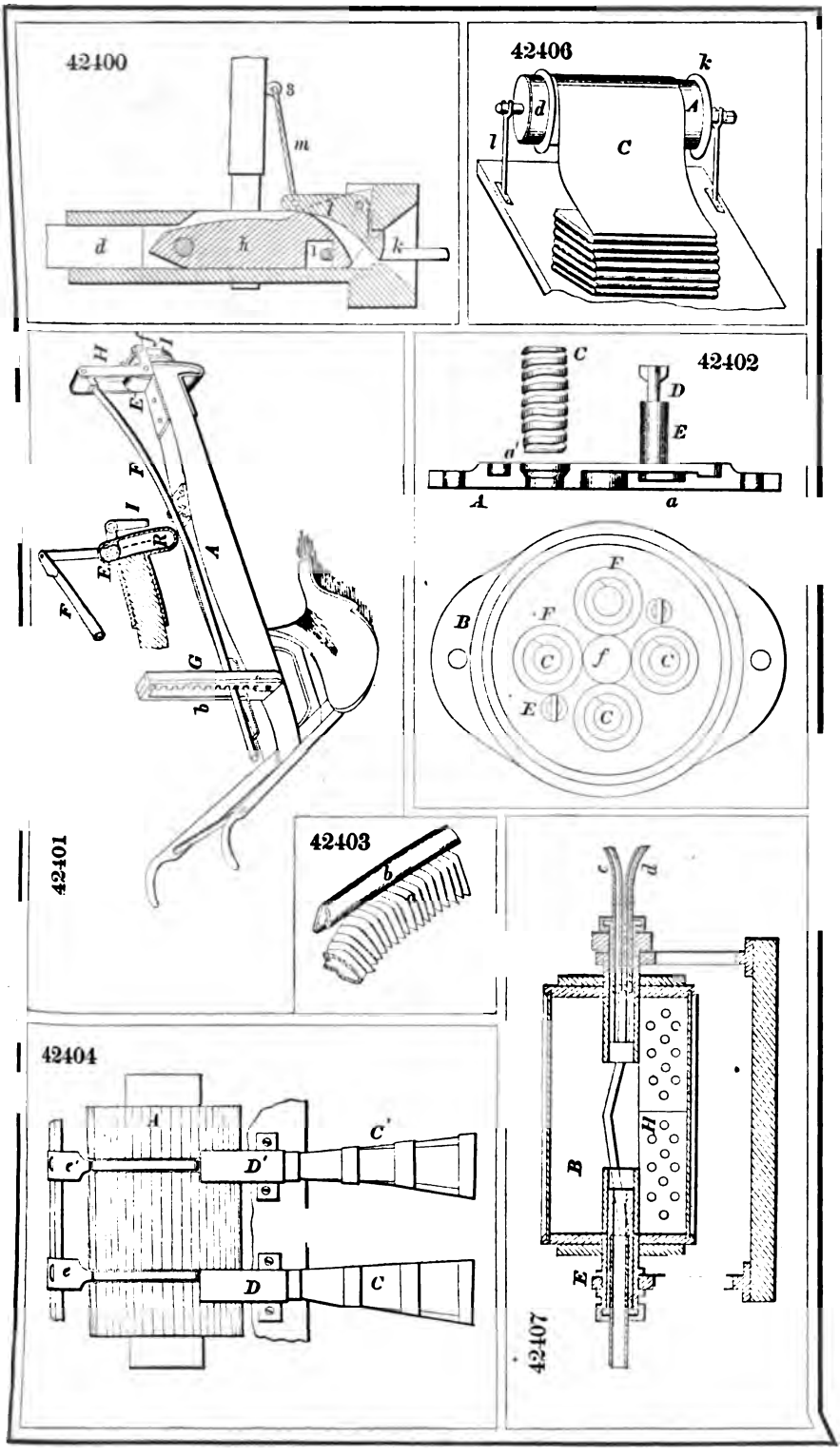
42400
42406
42402
42401
42403
42404
42407

42408

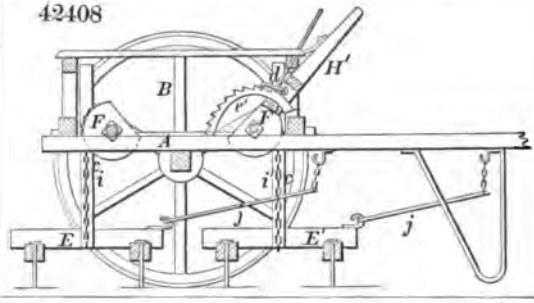

42413

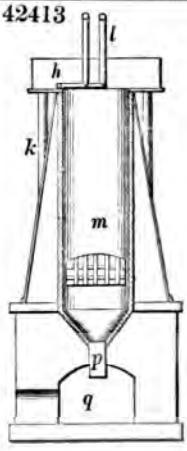

42411

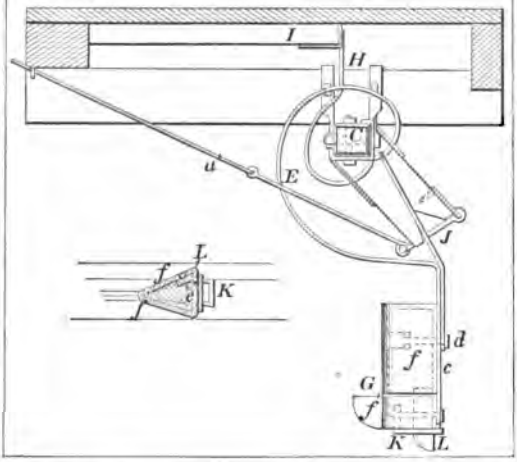

42409

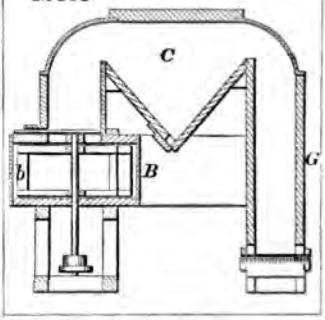

42410

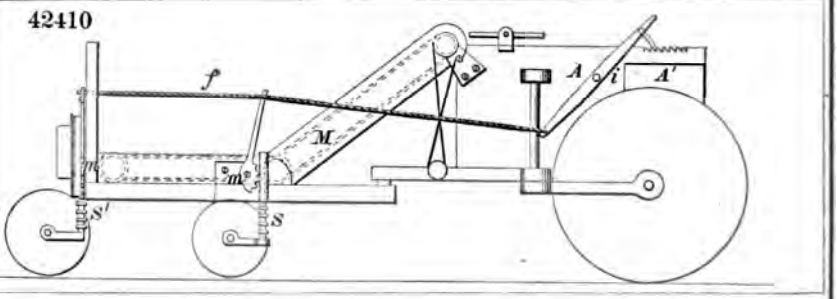

42414

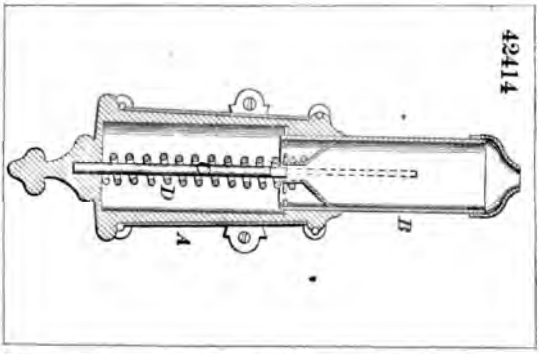

42412

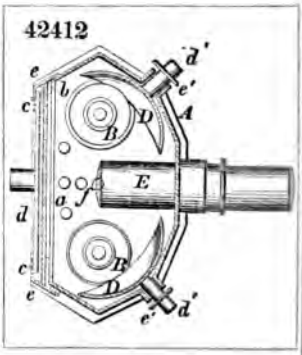

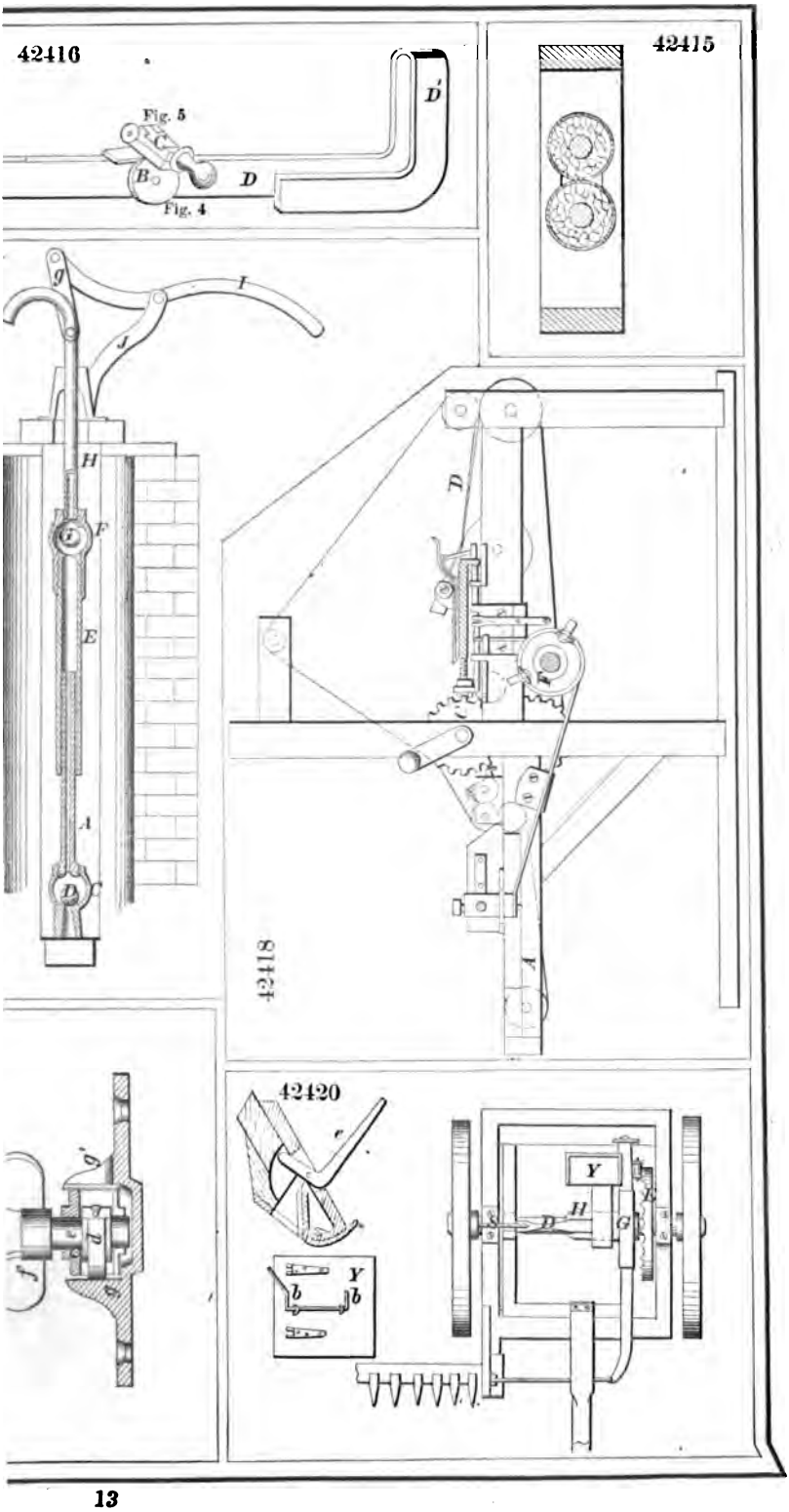
42416
Fig. 5
Fig. 4
42415
42418
42420

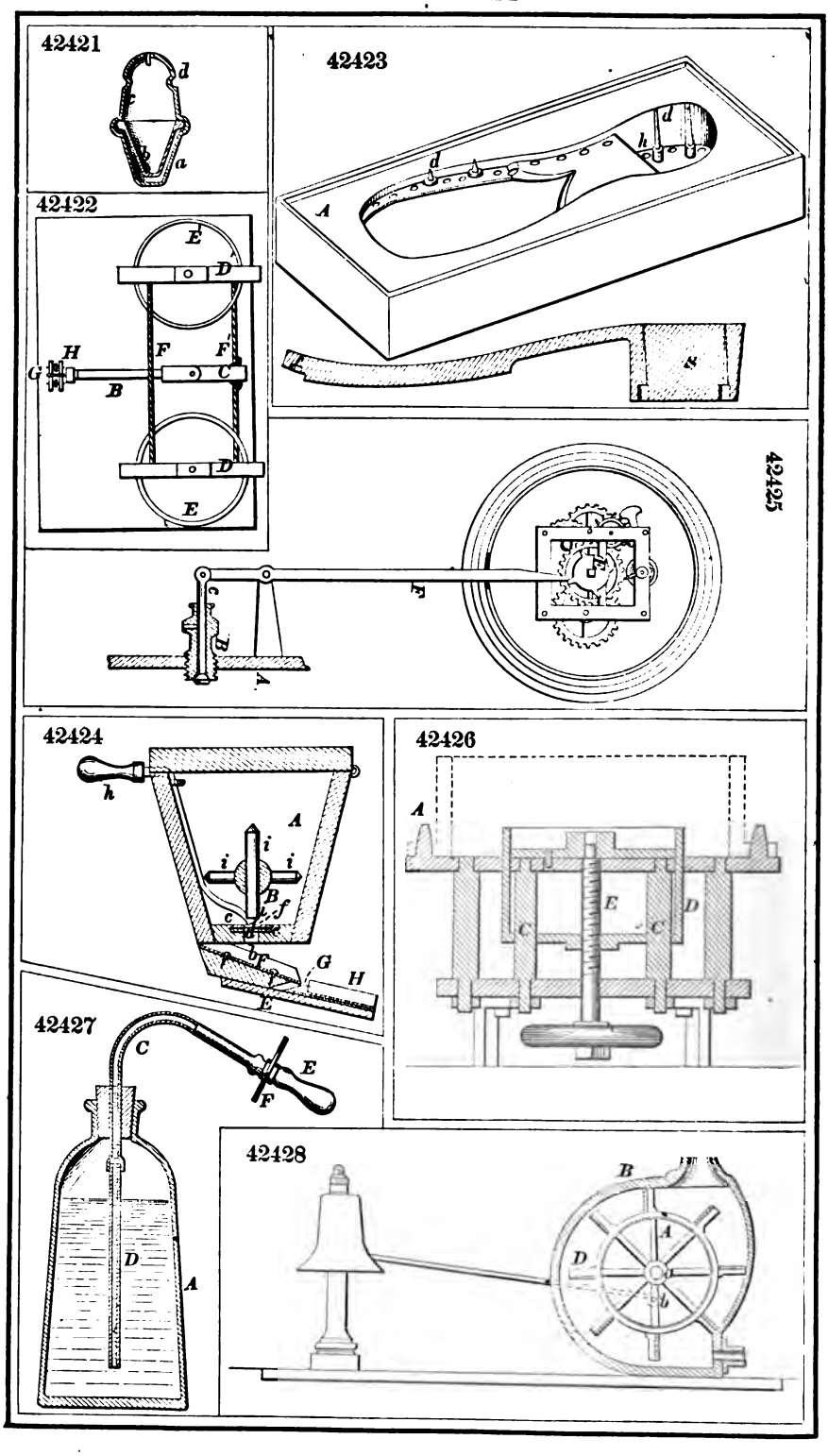
42421
d
a
42422
E
D
H
F
F
G
C
B
D
E
42423
d
d
h
A
B
42425
F
C
H
A
42424
h
A
i
i
i
B
f
c
G
H
E
42426
A
E
D
C
C
42427
C
E
F
D
A
42428
B
A
D
b

42429

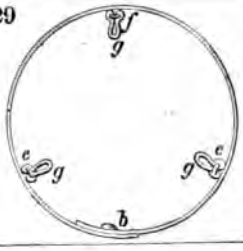

42430

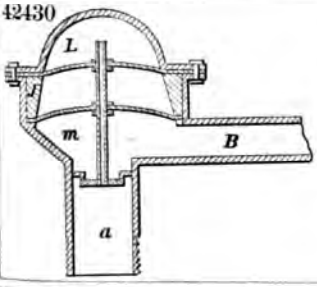

42431

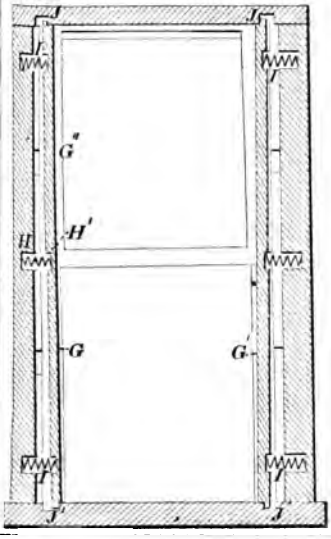

42432

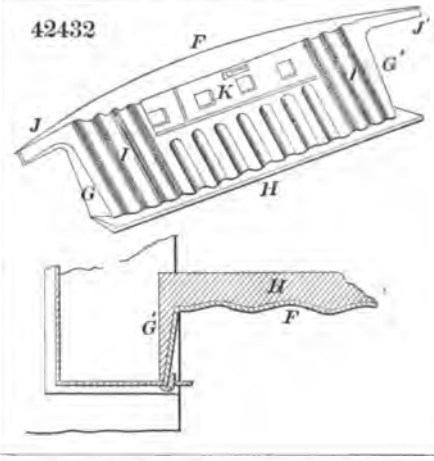

42433

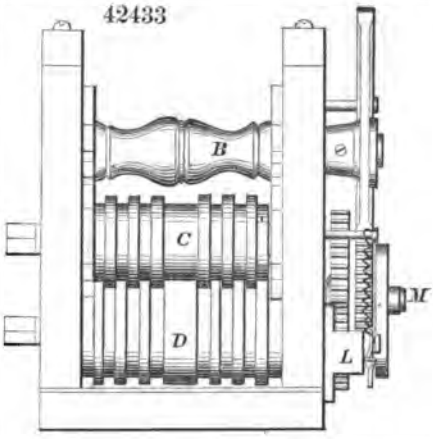

42434

42435

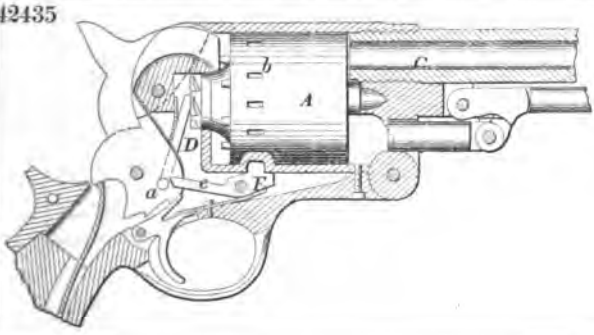

42436

42437

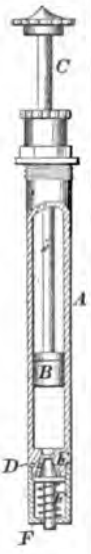

42438

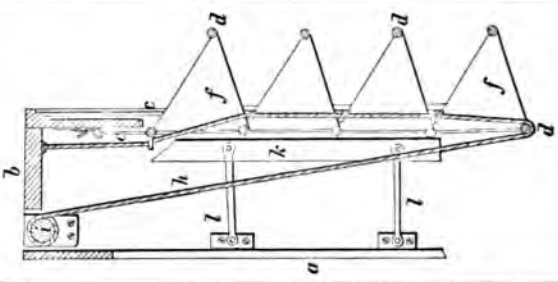

42440

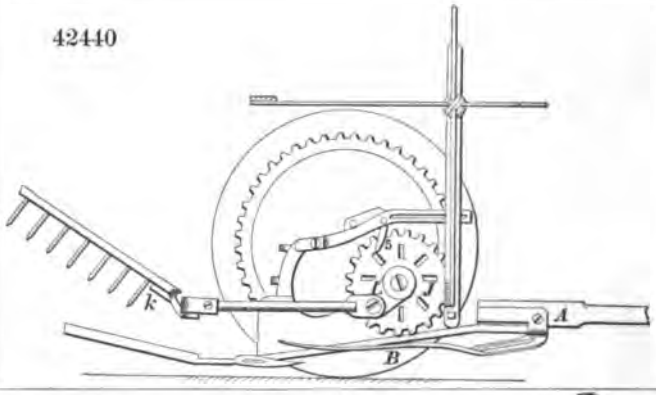

42439

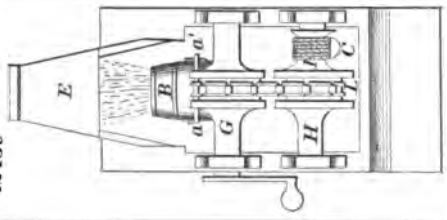

42442

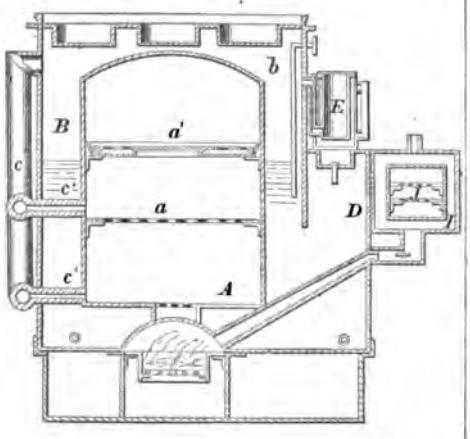

42443

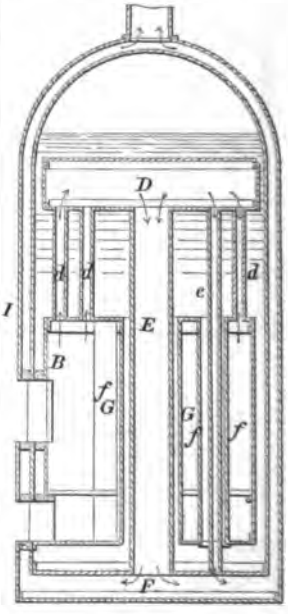

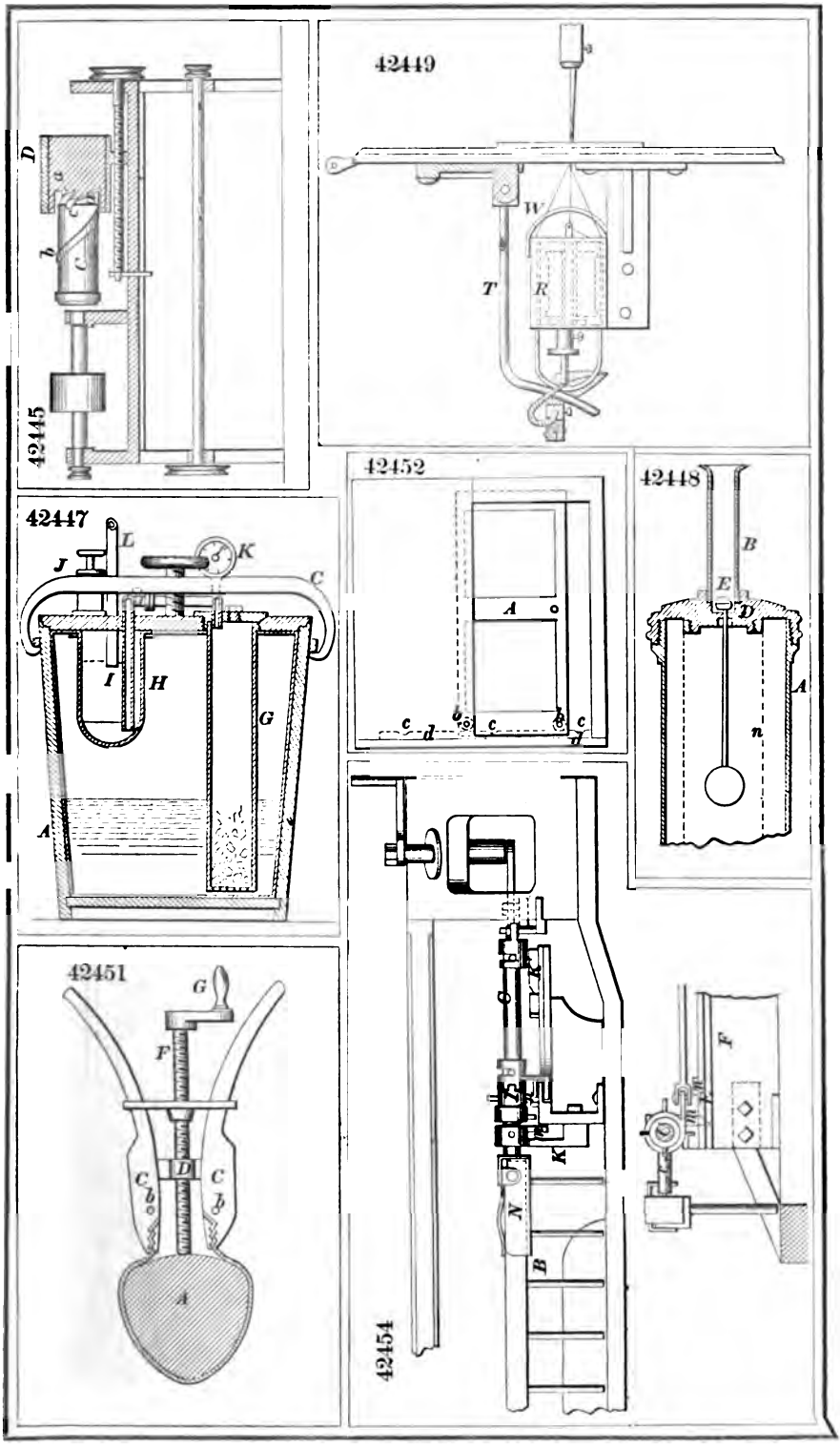
42445
42449
42447
42452
42448
42451
42454

42455

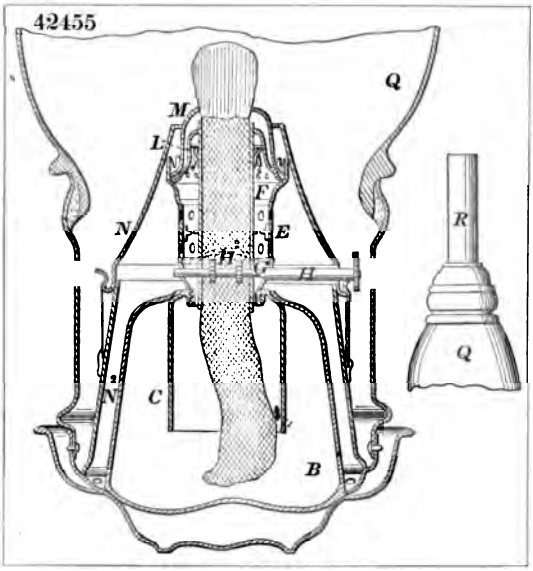

42457

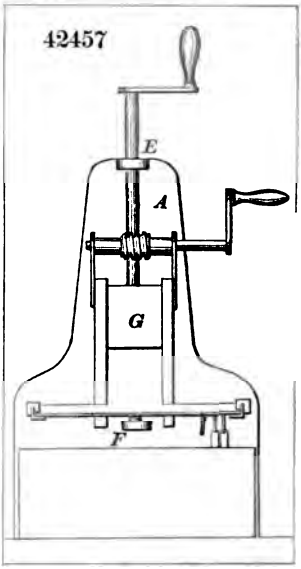

42456

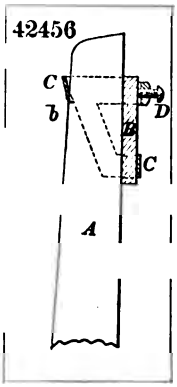

42460

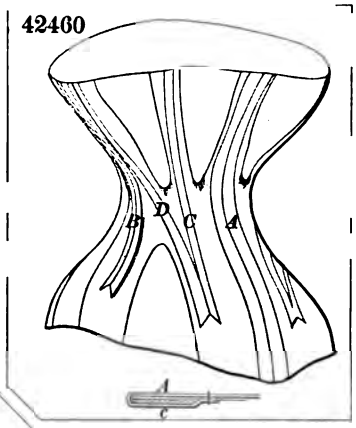

42462

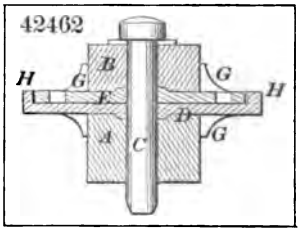

42459

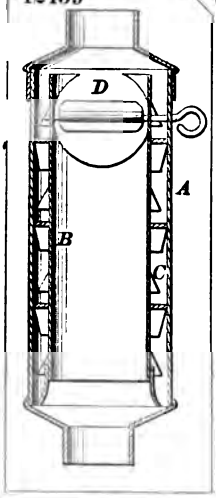

42461

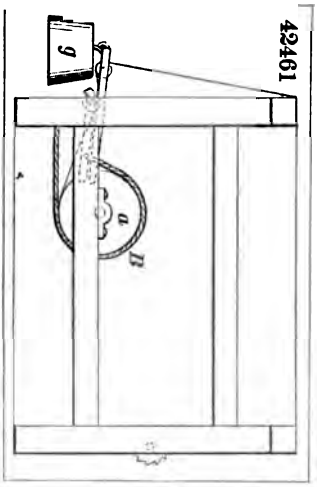

42463

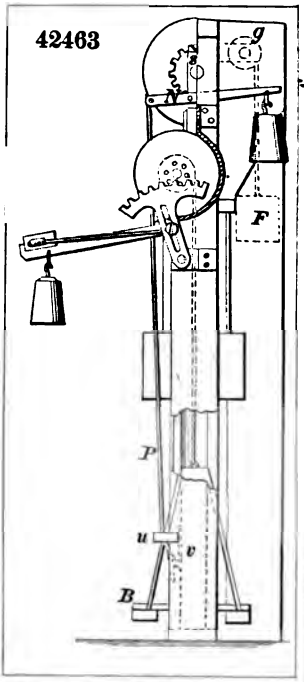

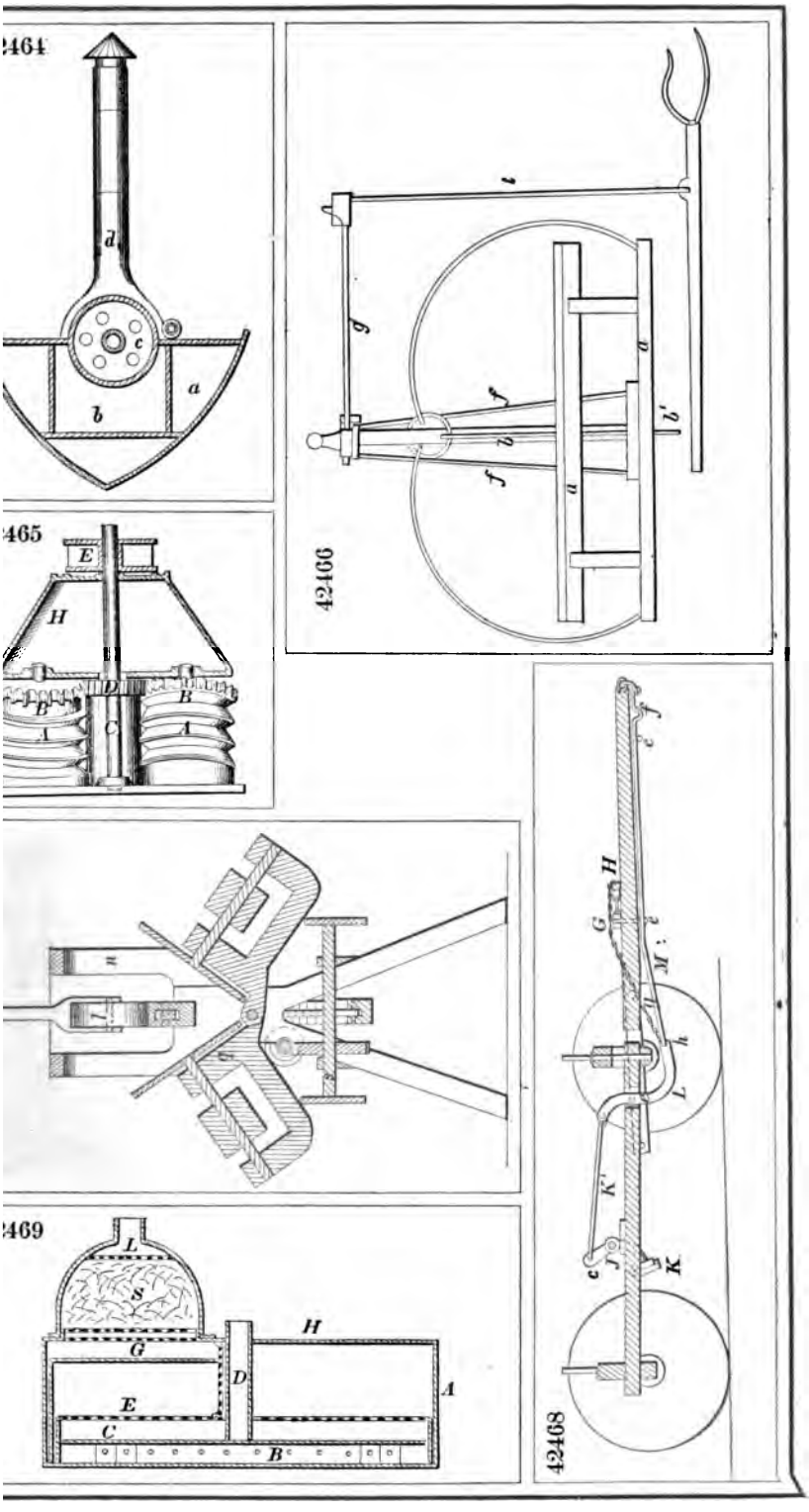
42464
42465
42466
42468
42469

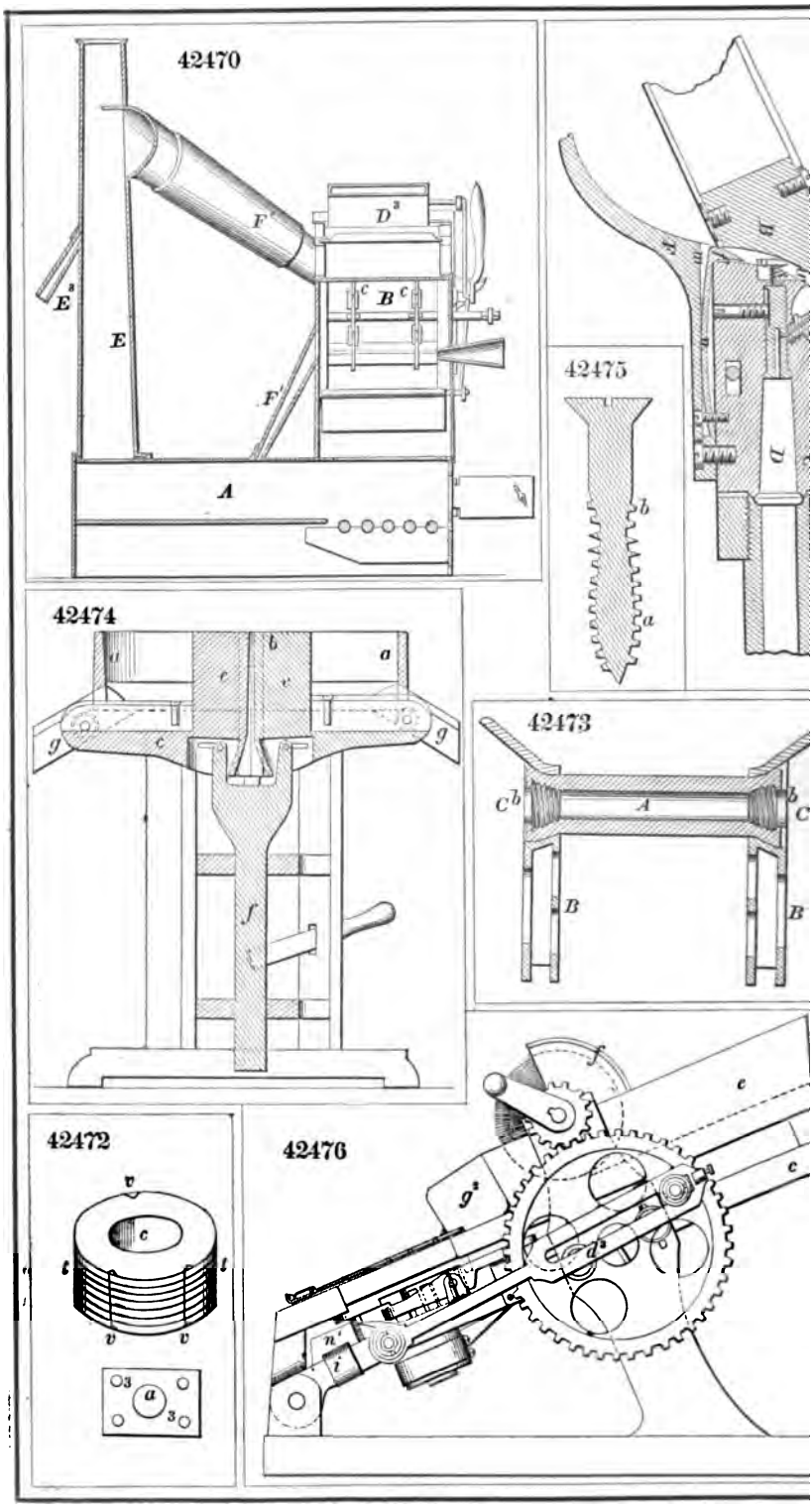
42470
42475
42474
42473
42472
42476

42477

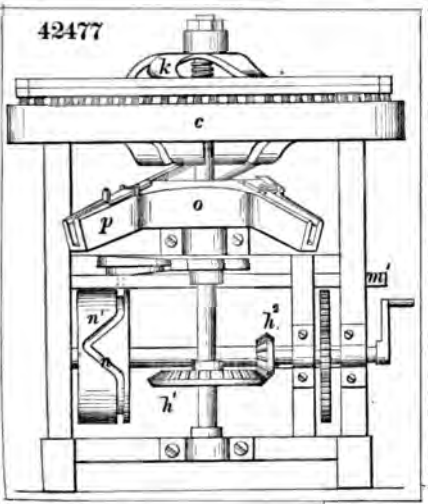

42482

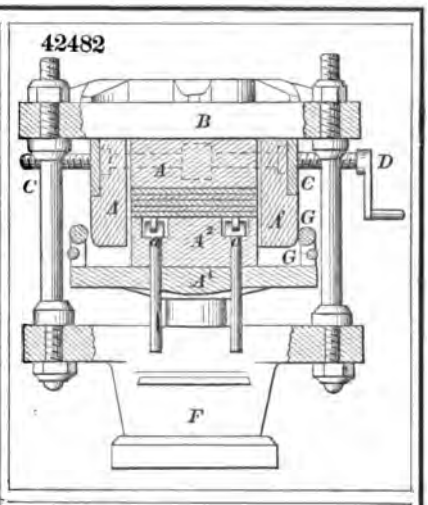

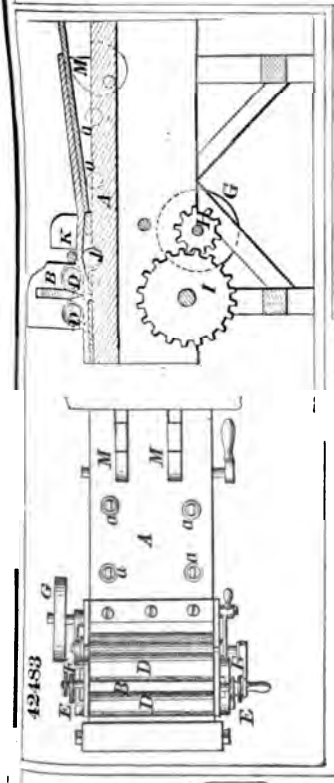

42478

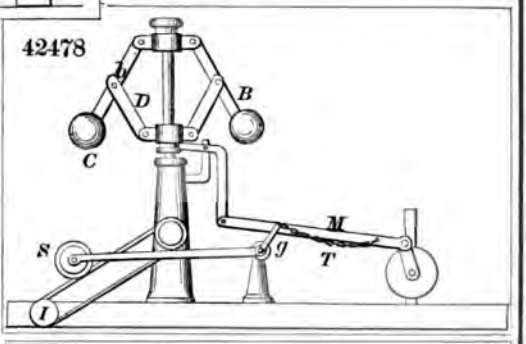

42481

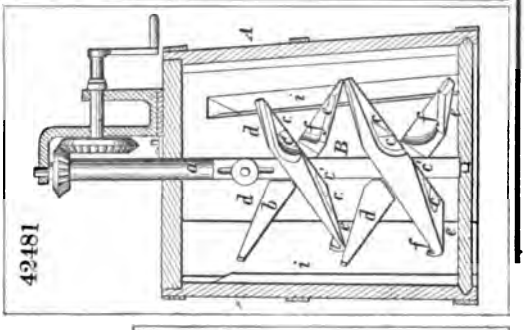

42483

42480

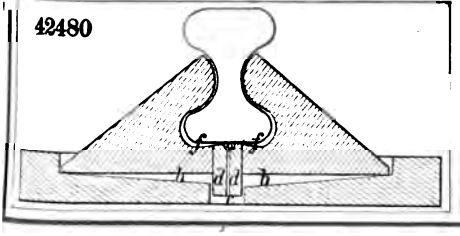

42484

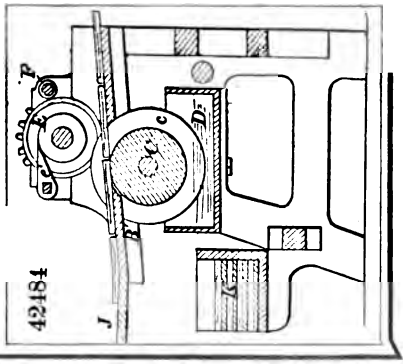

42485

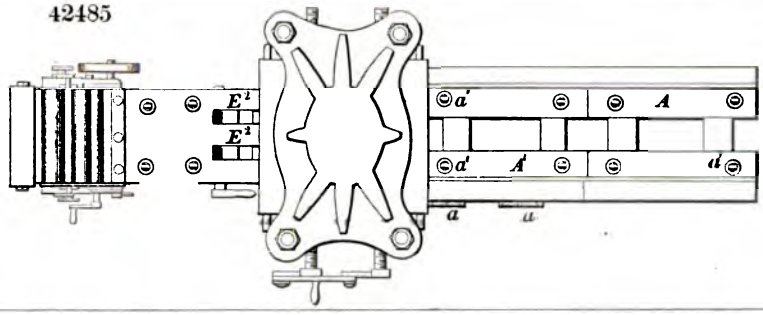

42488

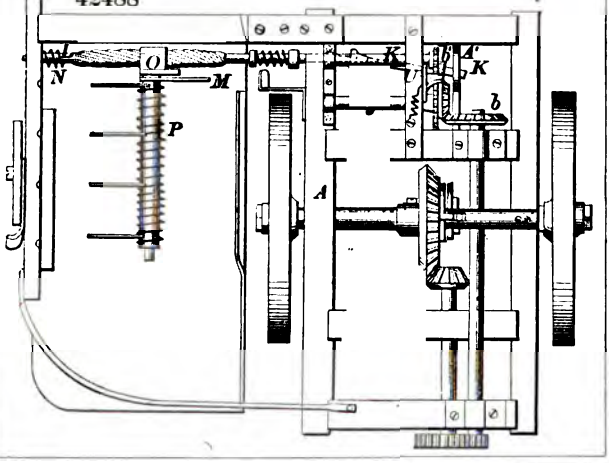

42489

42487

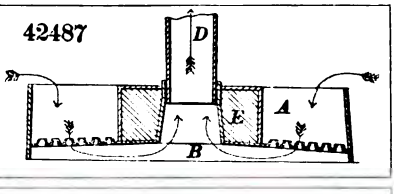

42490

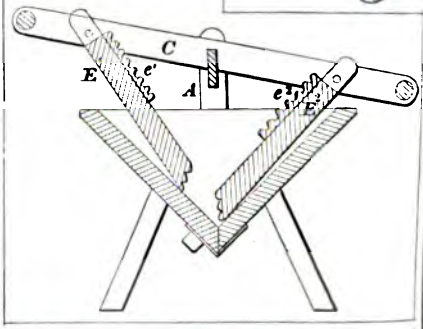

42486

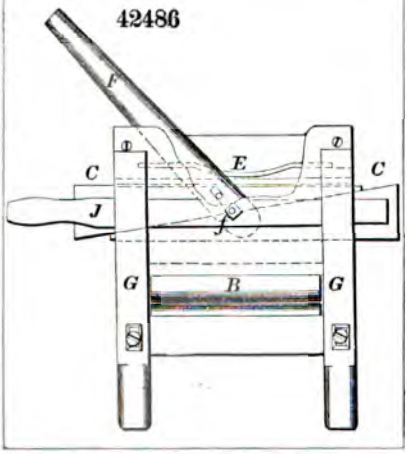

42491

42492

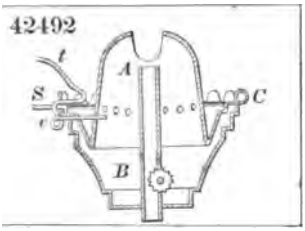

42495

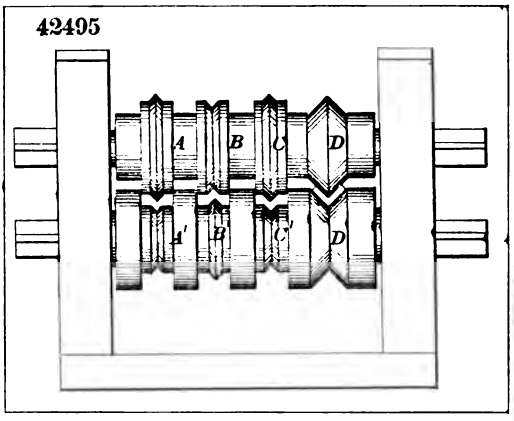

42493

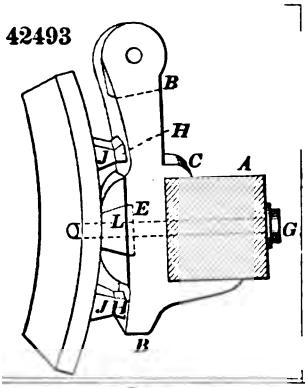

42496

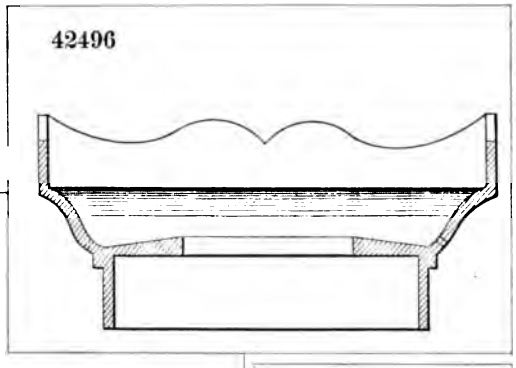

42494

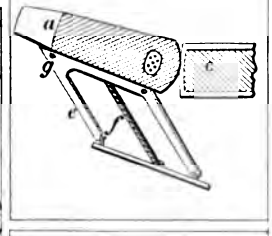

42499

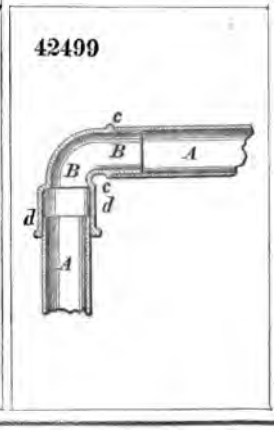

42498

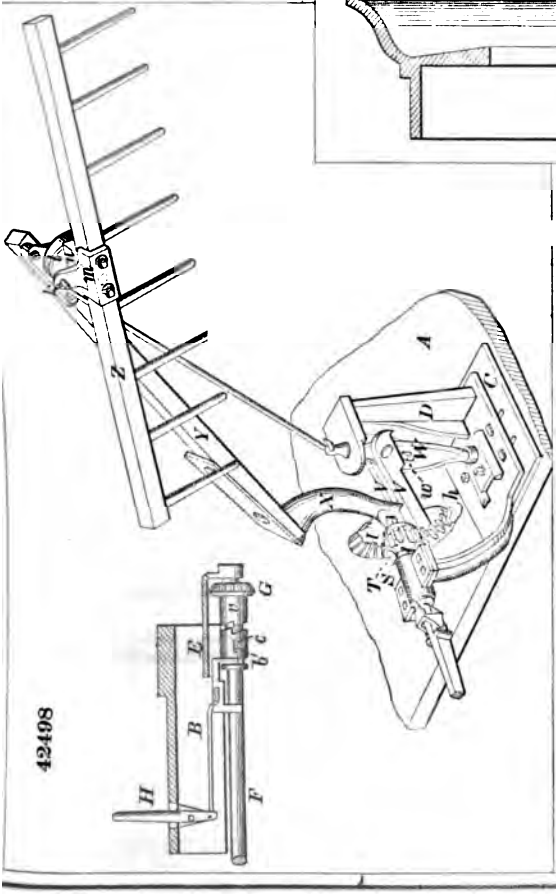

42500

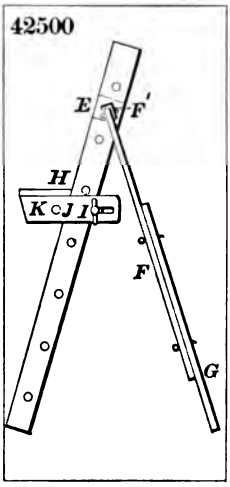

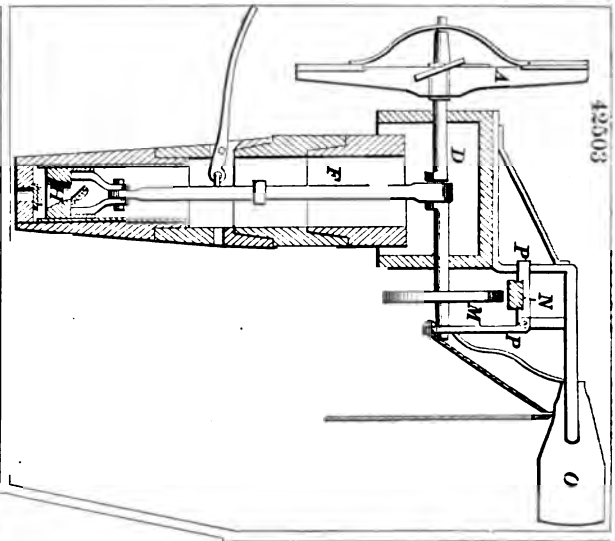

42503

42501

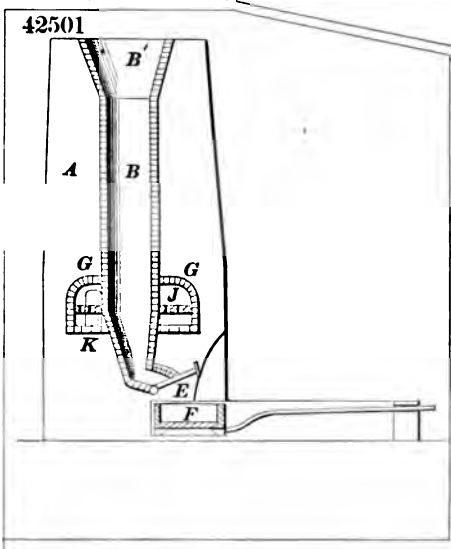

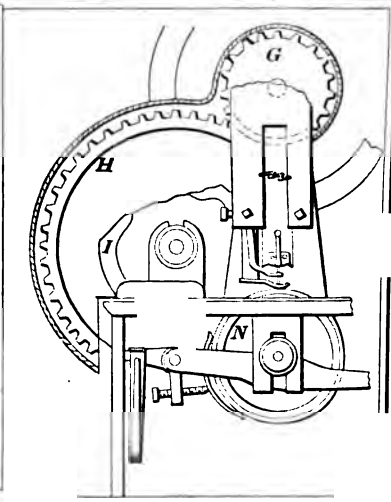

42502

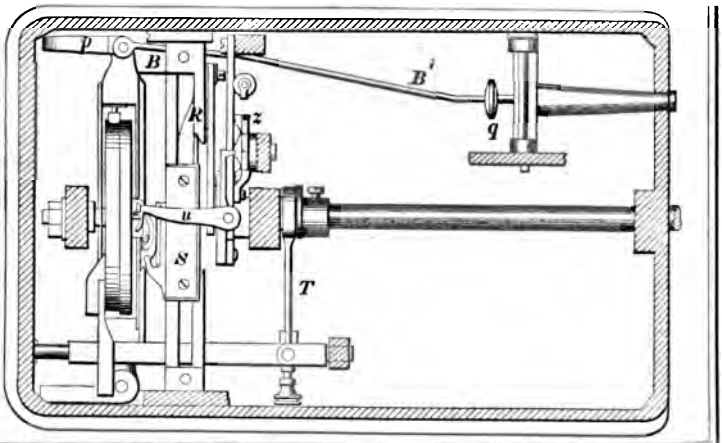

42504

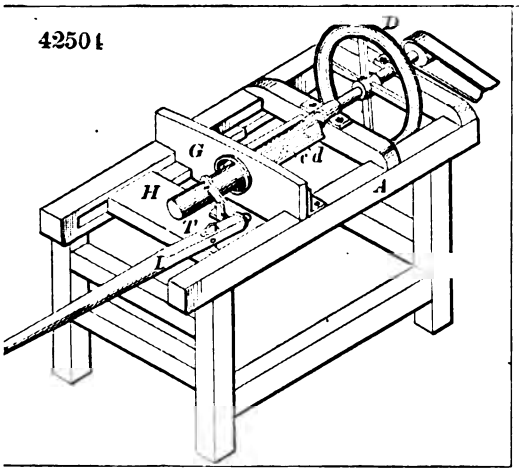

42507

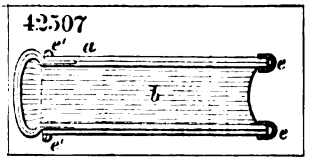

42508

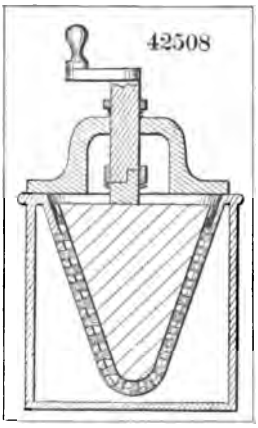

42506

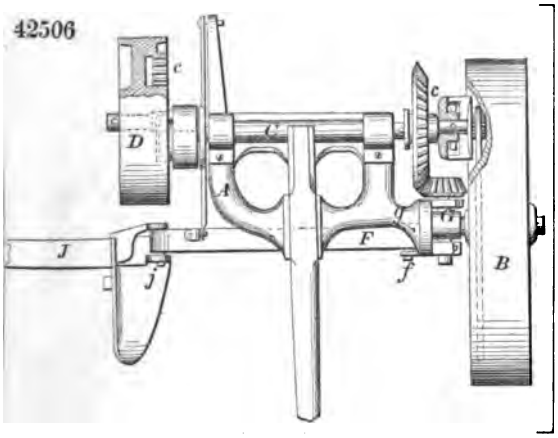

42509

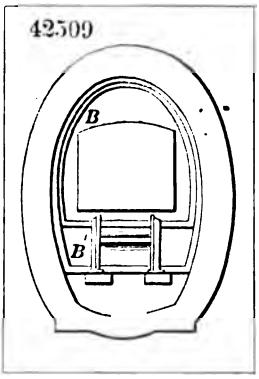

42505

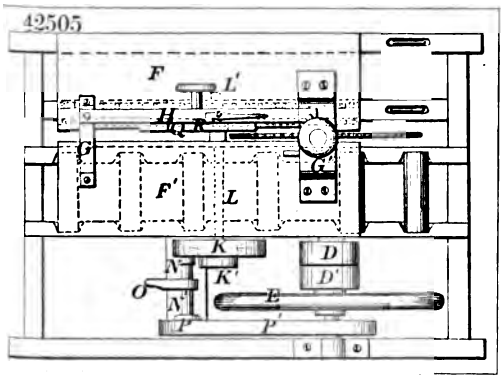

42511

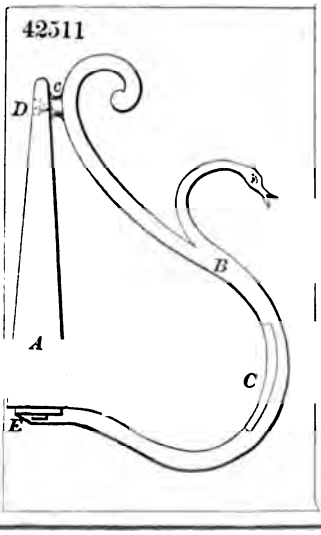

42510

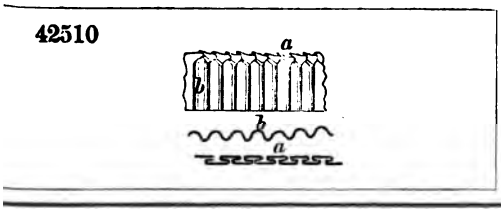

42512

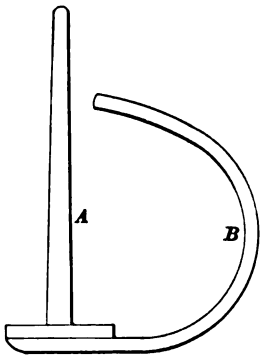

42513

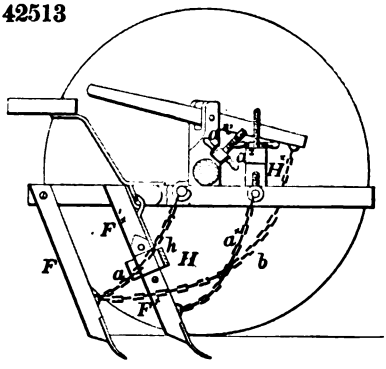

42514

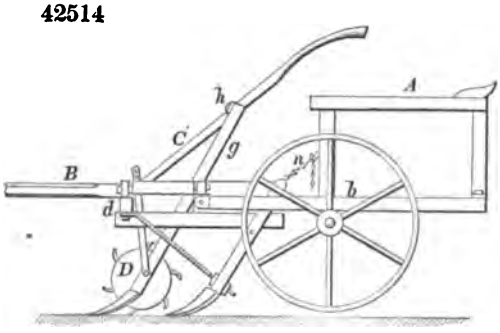

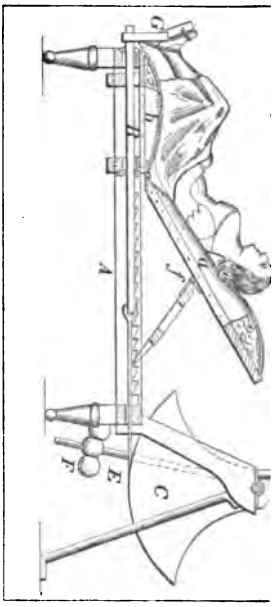

42515

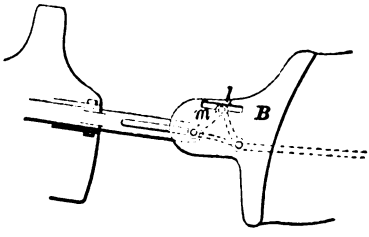

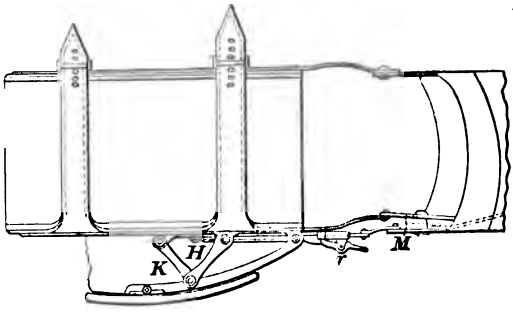

4251

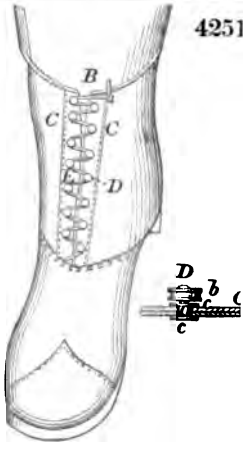

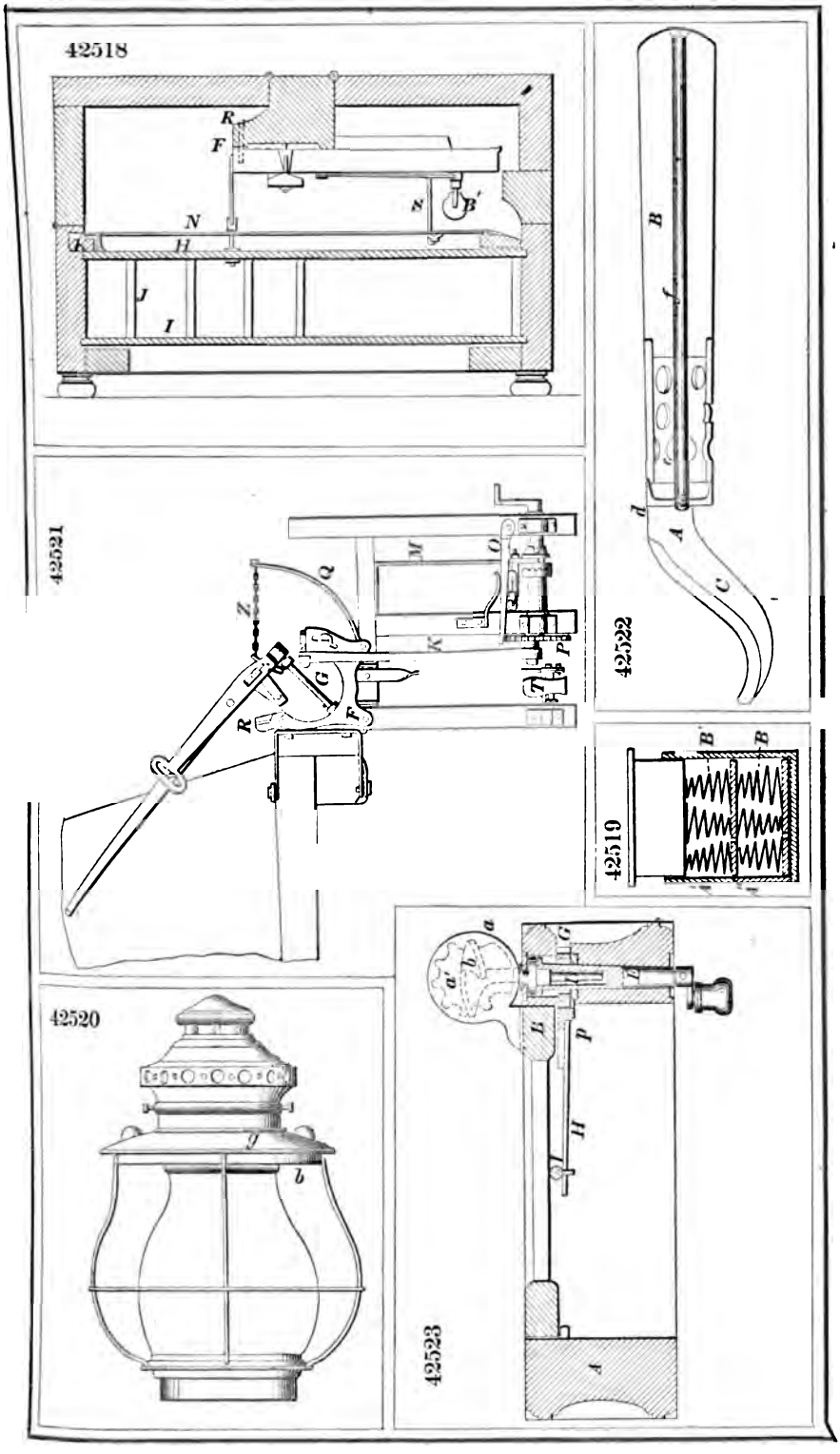
42518
42521
42522
42519
42520
42523

42524

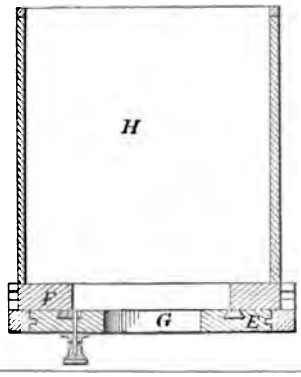

42525

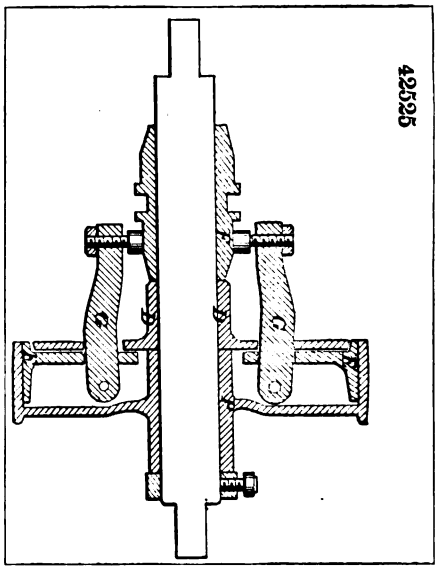

42526

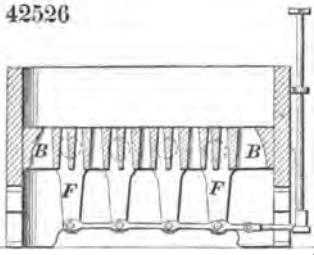

42528

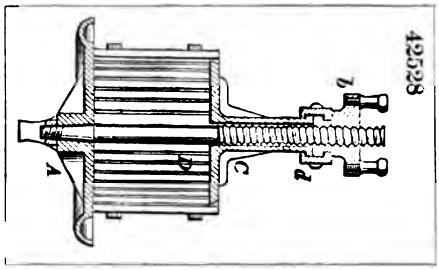

42527

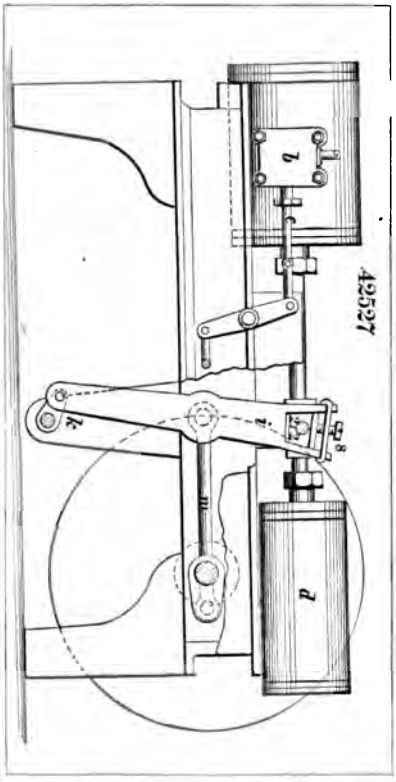

42529

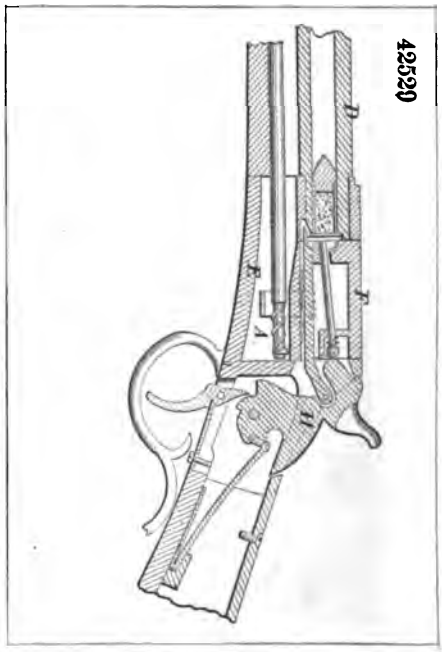

42530

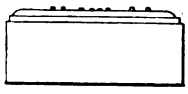

42532

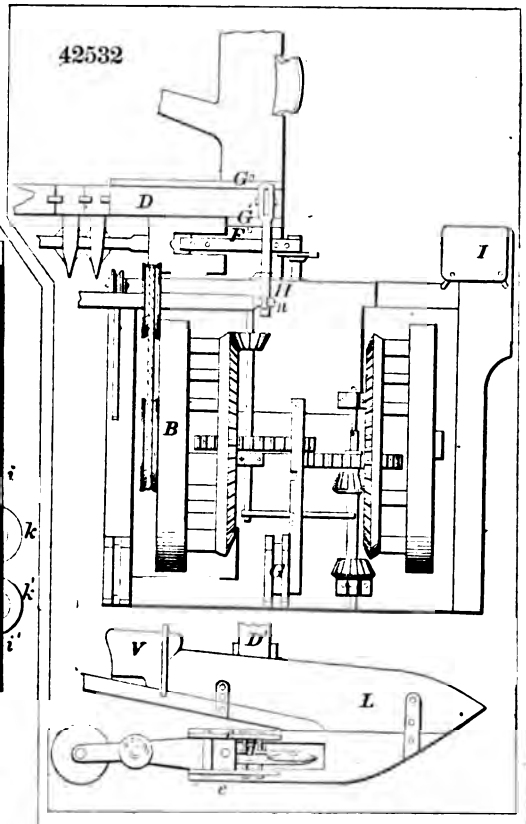

42531

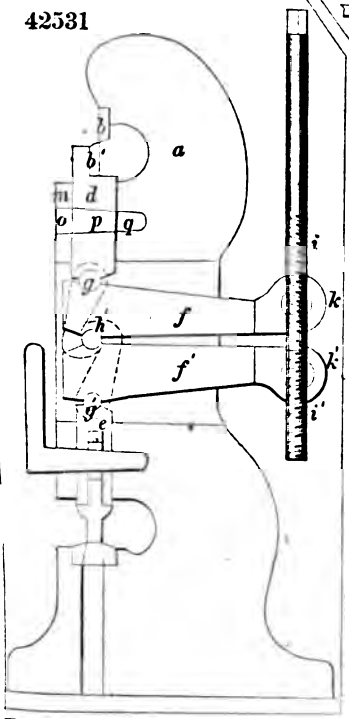

42534

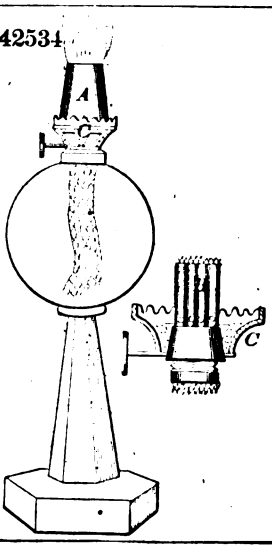

42535

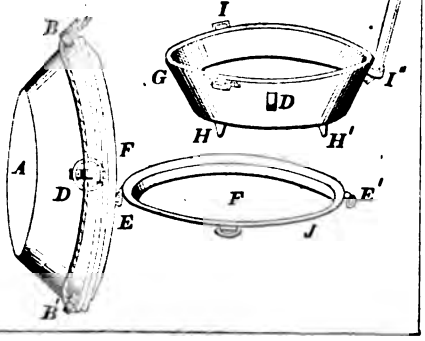

42536

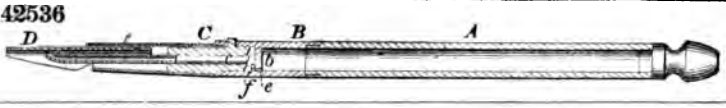

42537

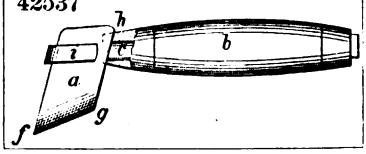

42539

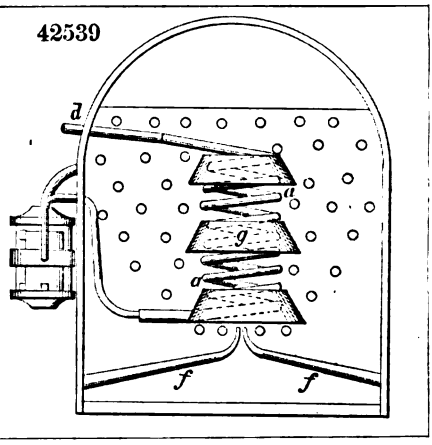

42540

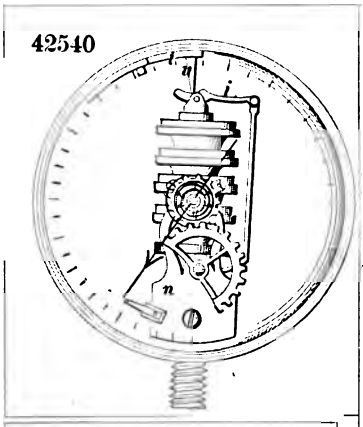

42543

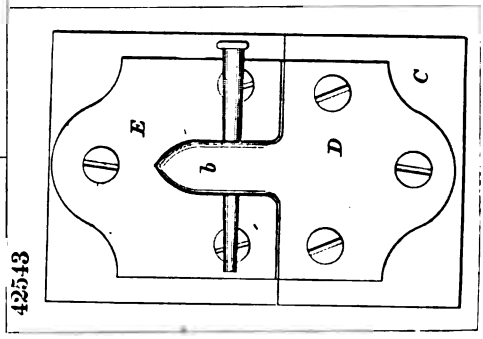

42538

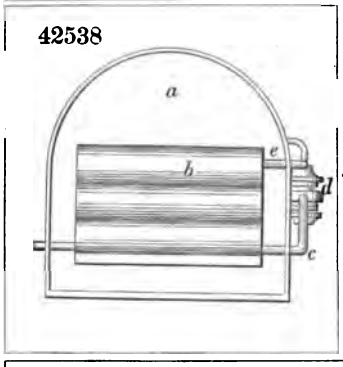

42544

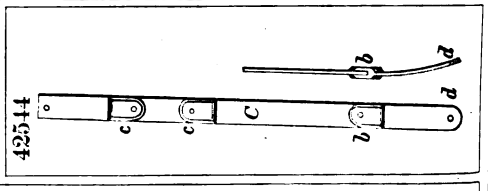

42542

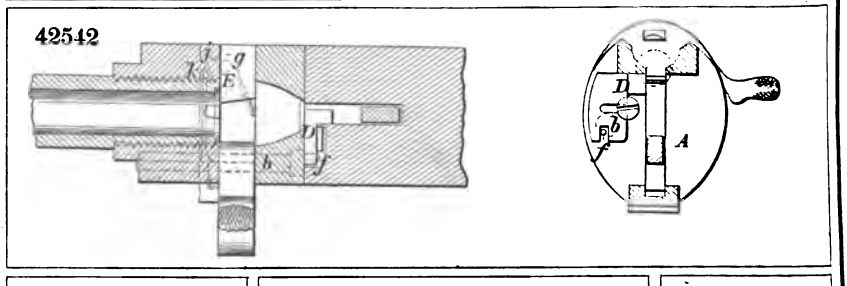

42541

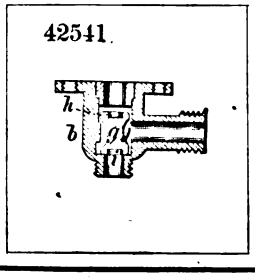

42545

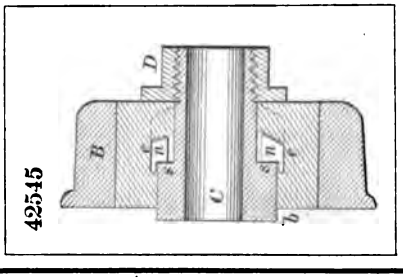

42546

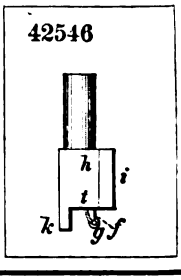

42547

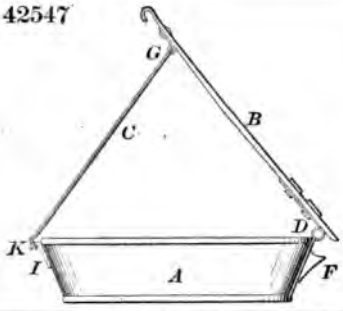

42550

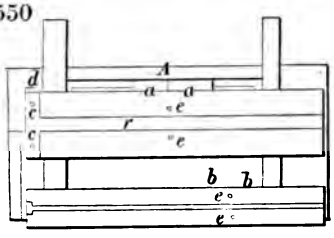

42549

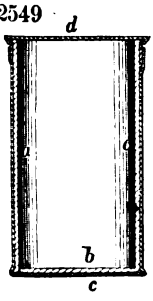

42551

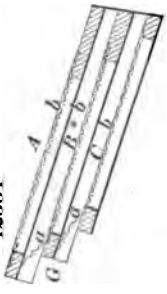

42553

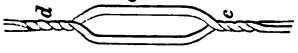

42548

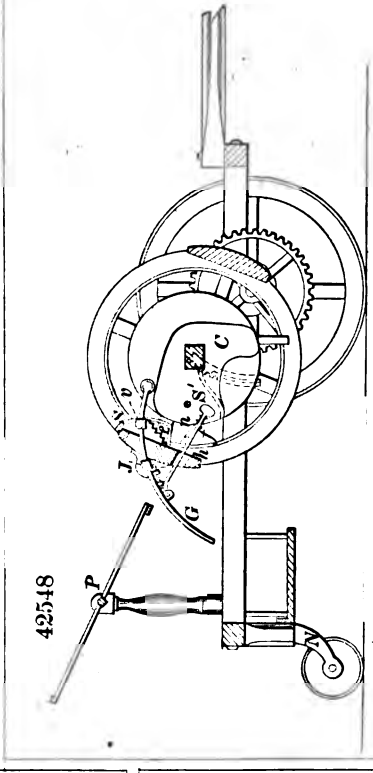

42552

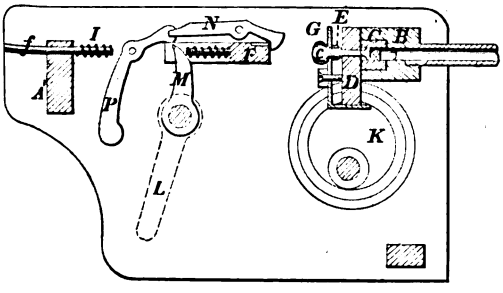

42554

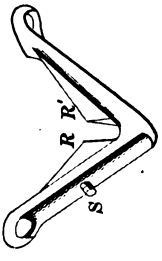

42555

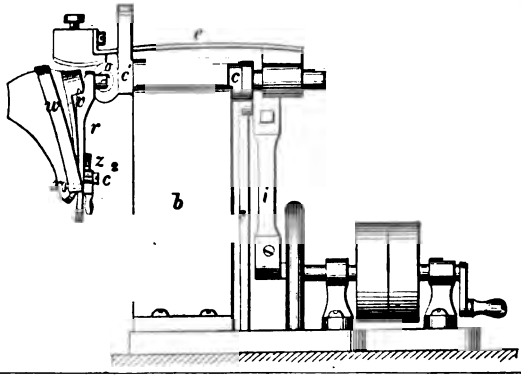

42557

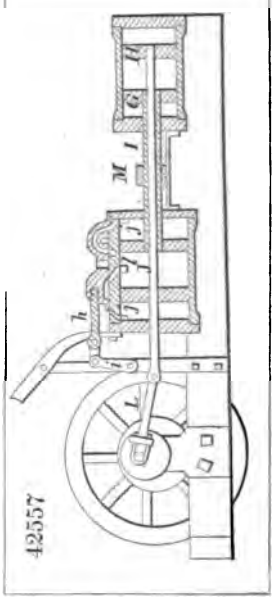

42556

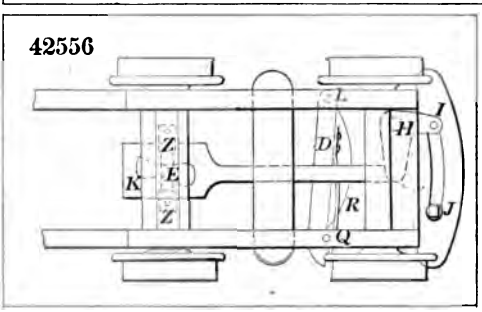

42558

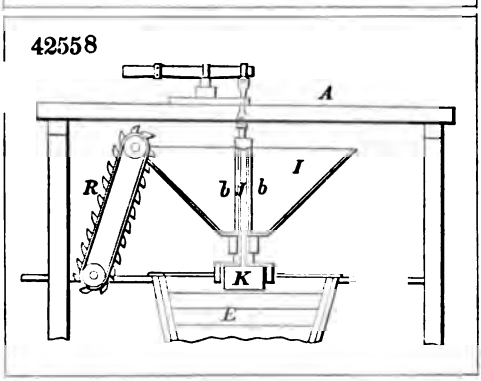

42560

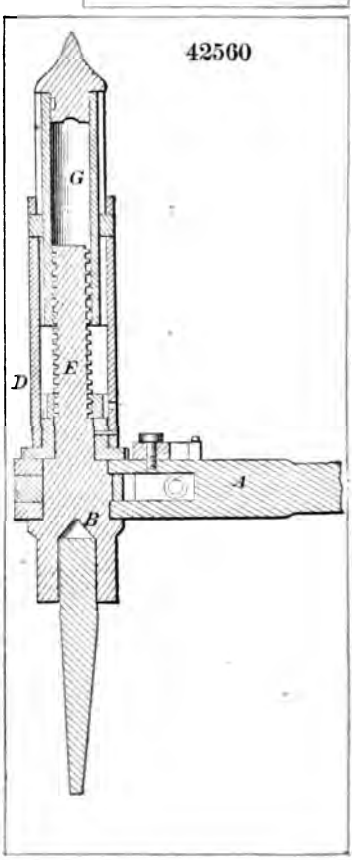

42559

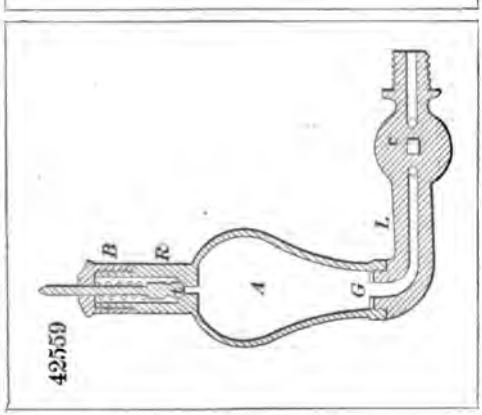

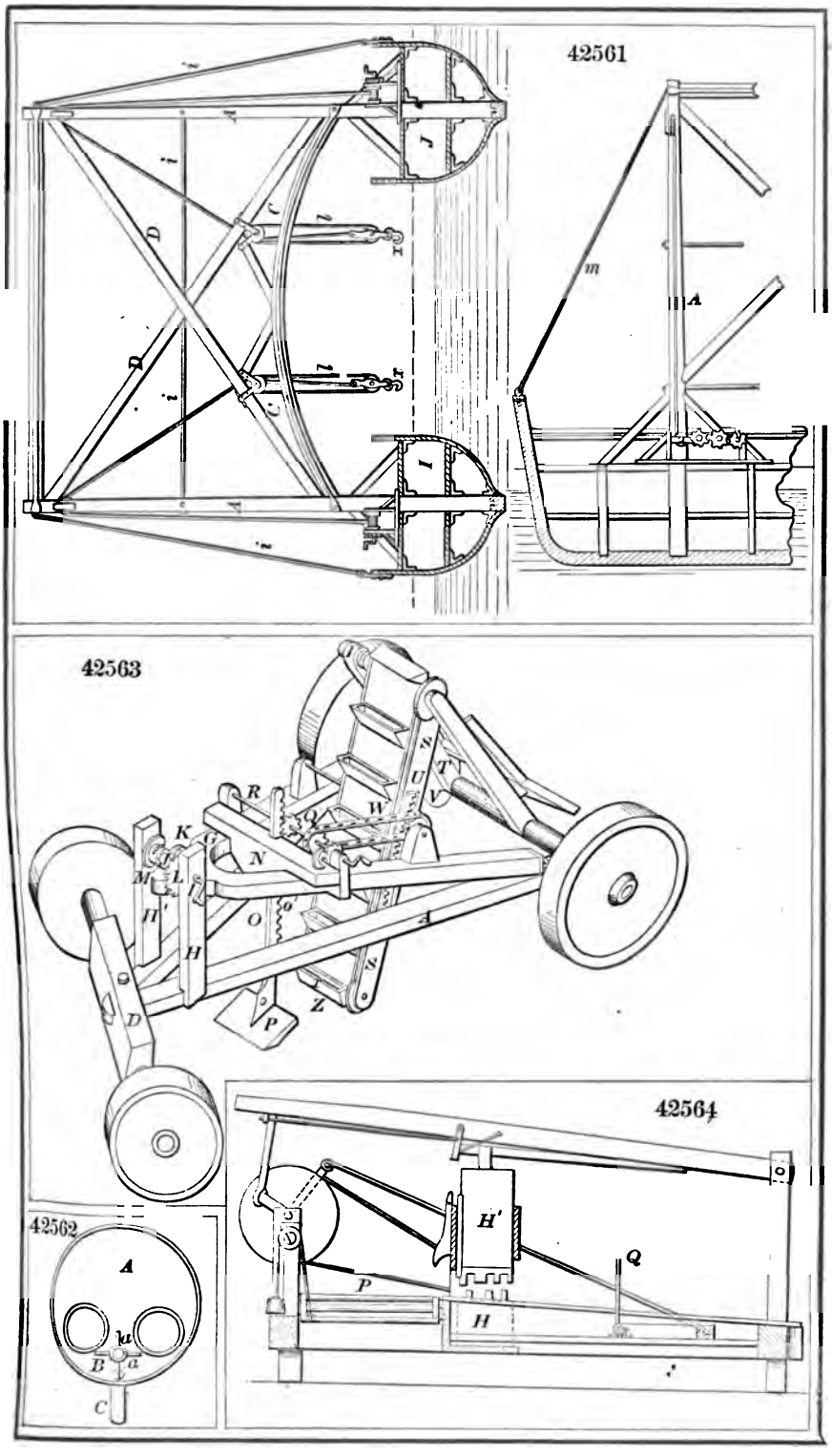
42561
42563
42564
42562

42565

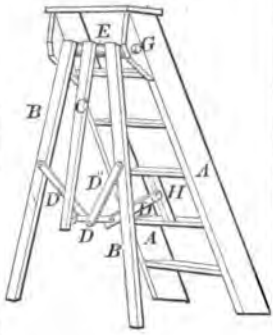

42566

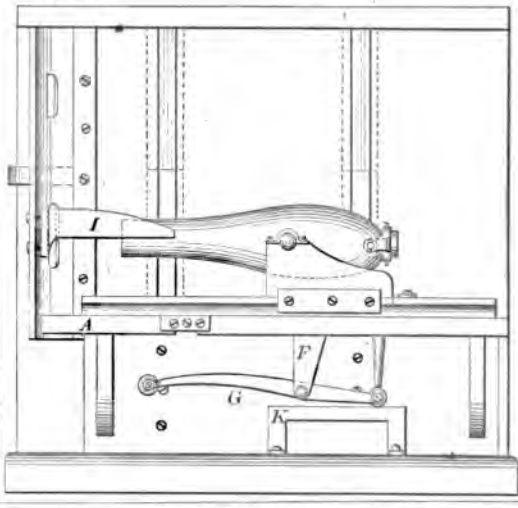

42568

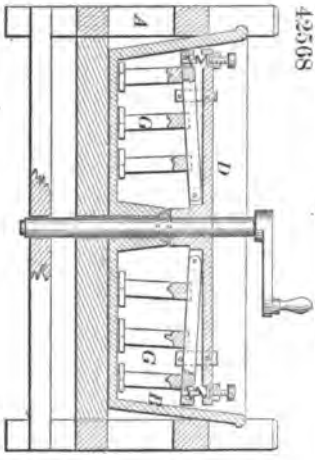

42567

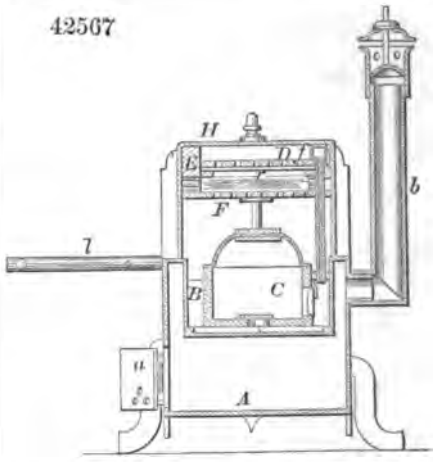

42569

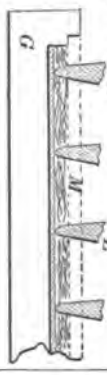

42571

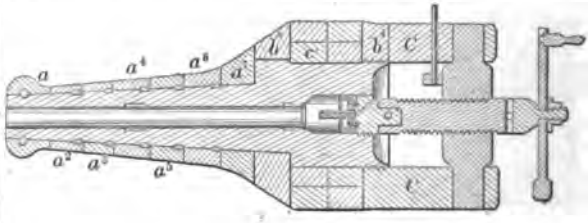

42572

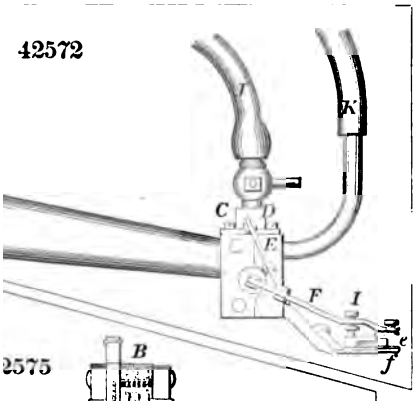

42574

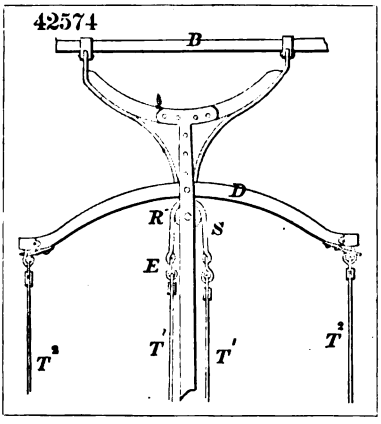

2575

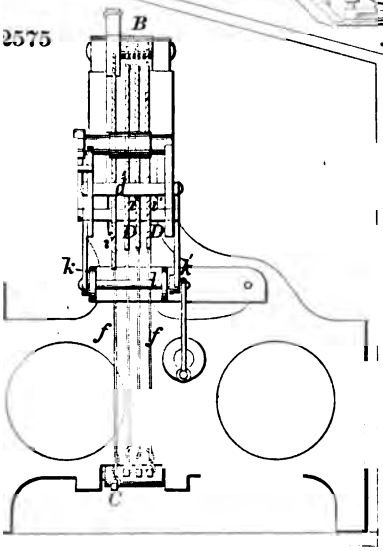

42576

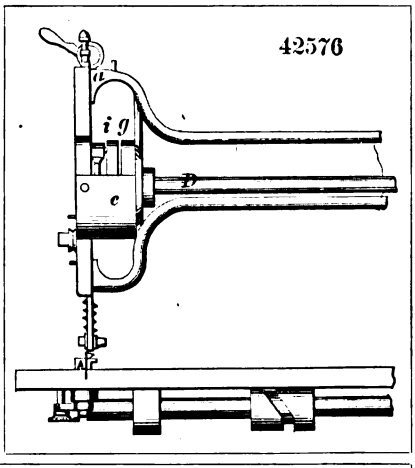

42573

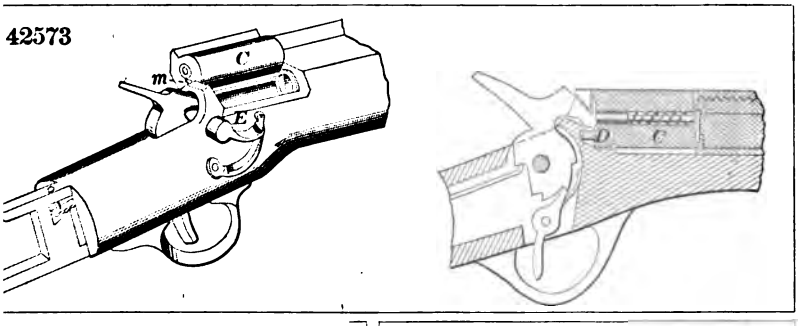

2577

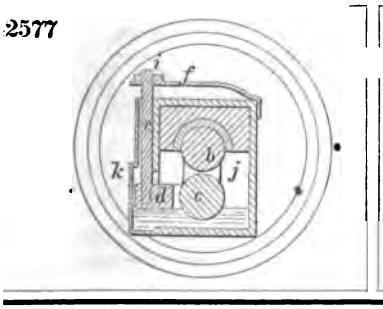

42578

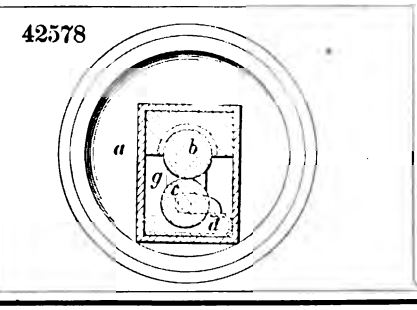

42579

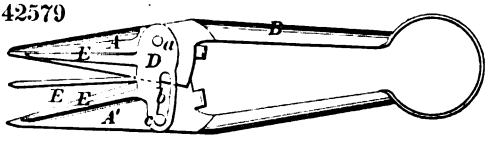

42580

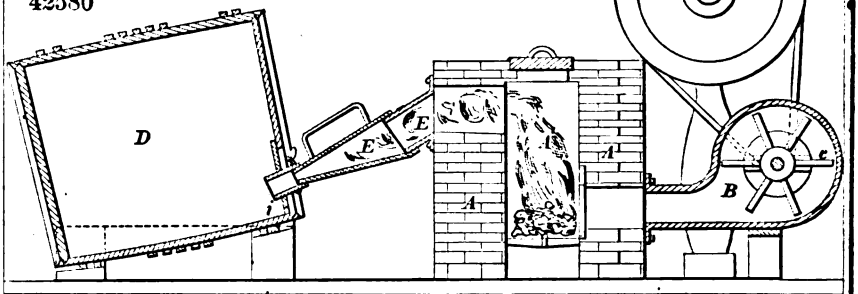

42582

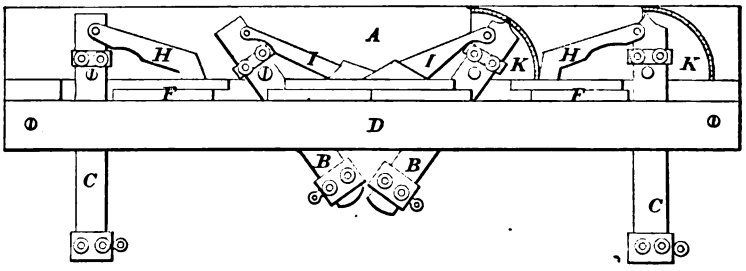

42581

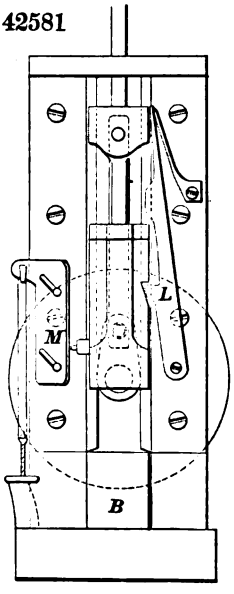

42583

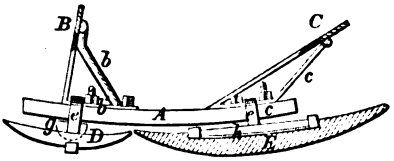

42585

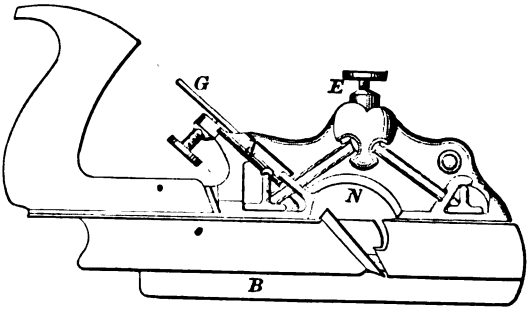

42586

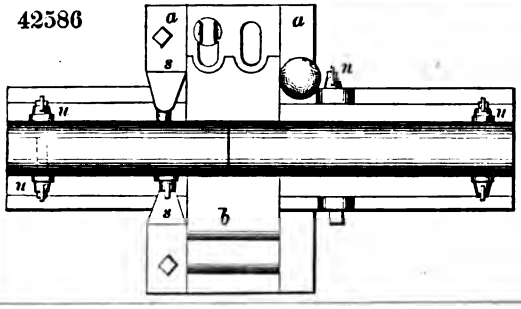

42588

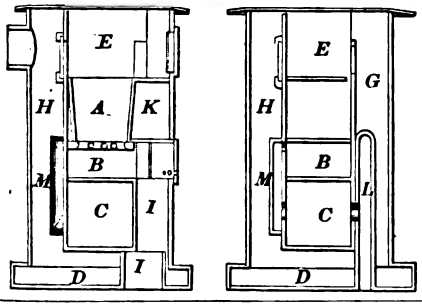

42590

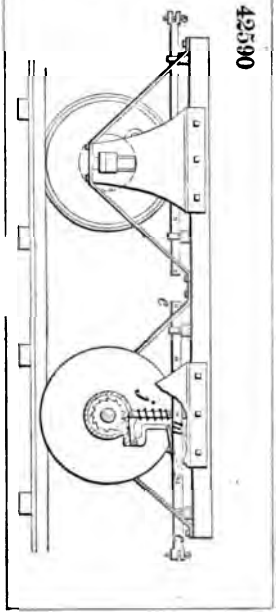

42591

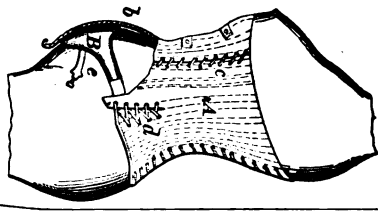

42592

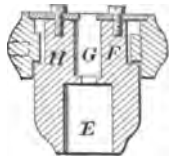

42593

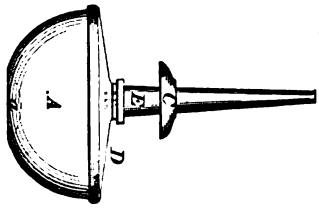

42594

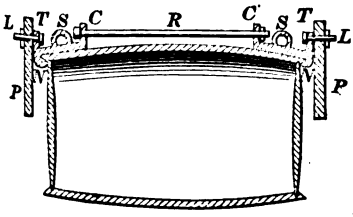

42595

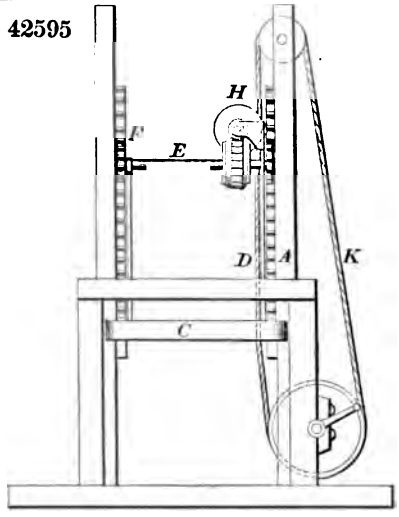

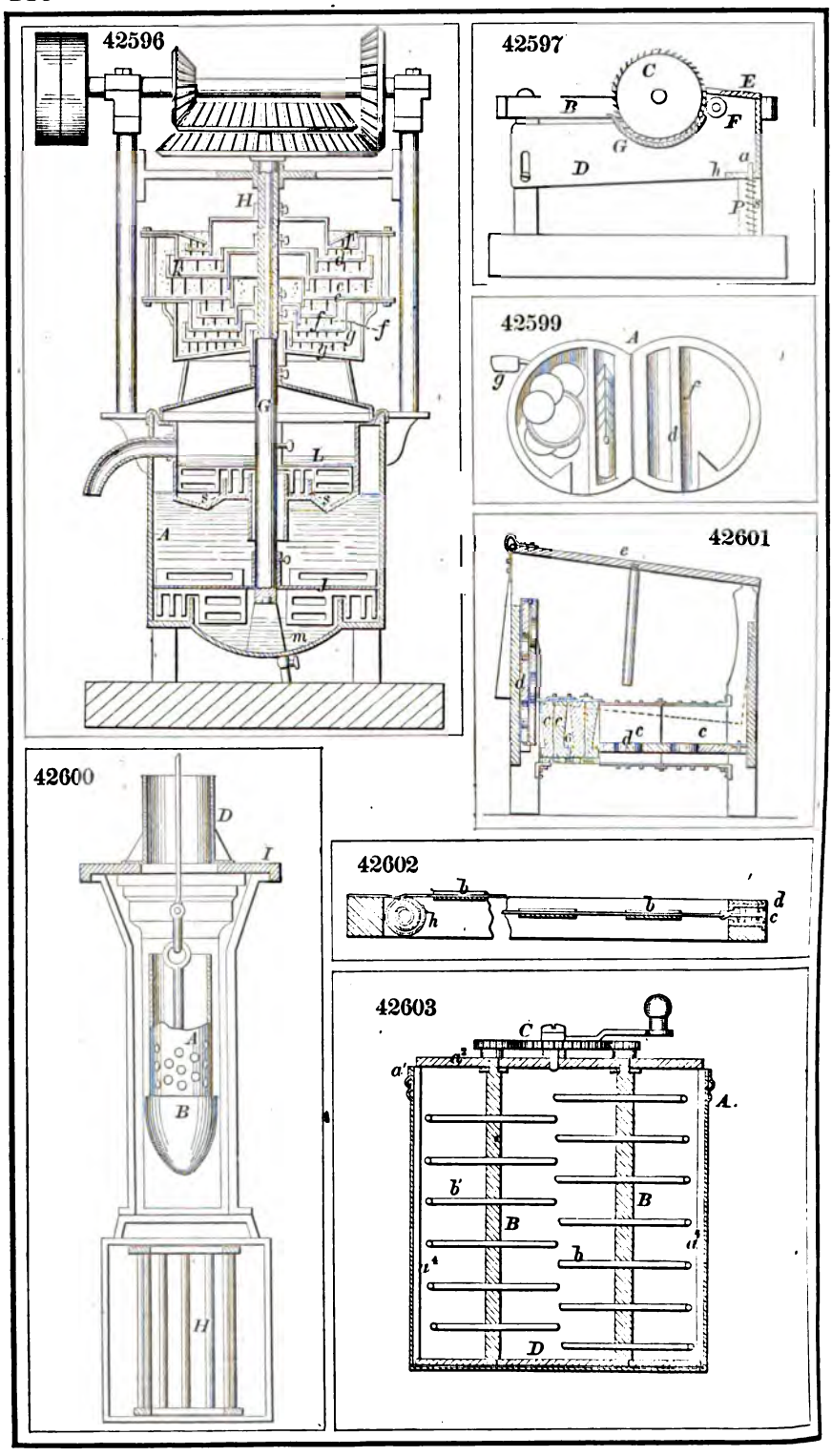
42596
H
G
L
A
J
m
42597
C
E
B
F
G
D
a
h
P
42599
A
g
f
d
42601
e
d
c
42600
D
I
A
B
H
42602
b
h
d
c
42603
C
a'
A.
b'
B
d'
h
D

42604

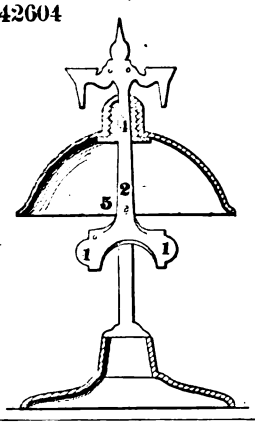

42608

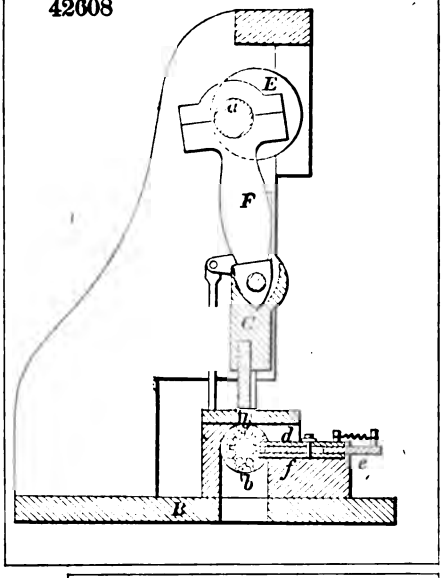

42605

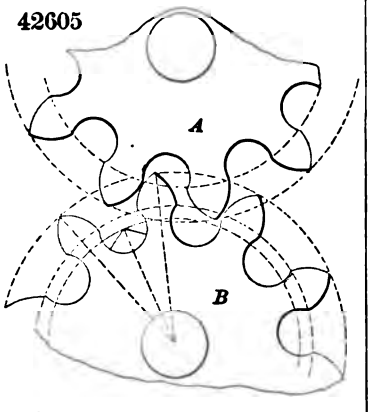

42609

42606

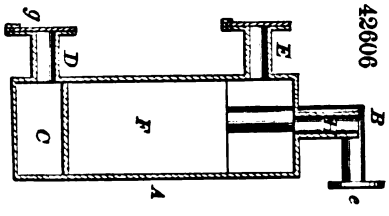

42610

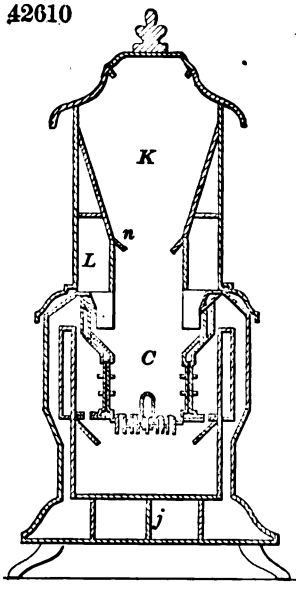

42607.

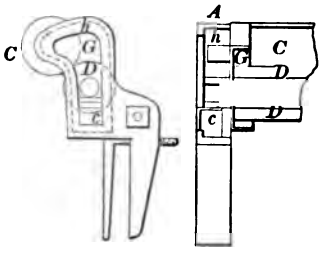

42611

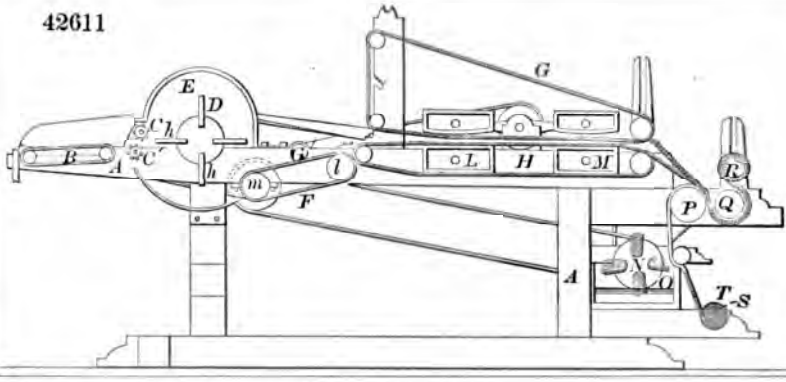

42613

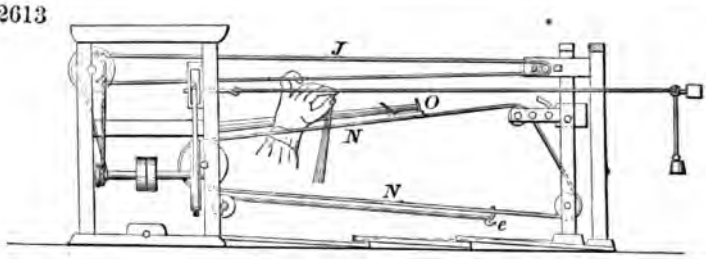

42614

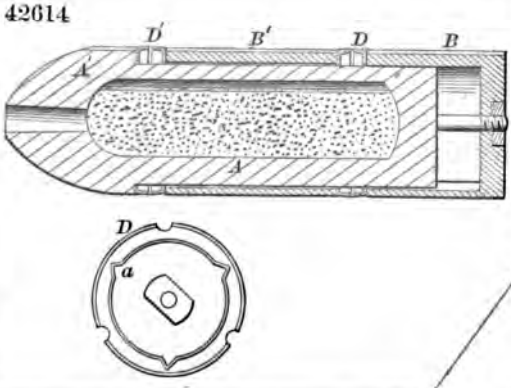

42612

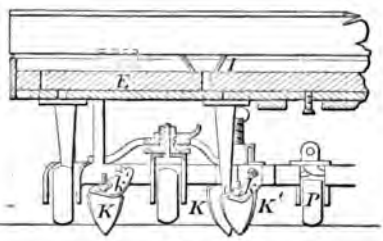

42615

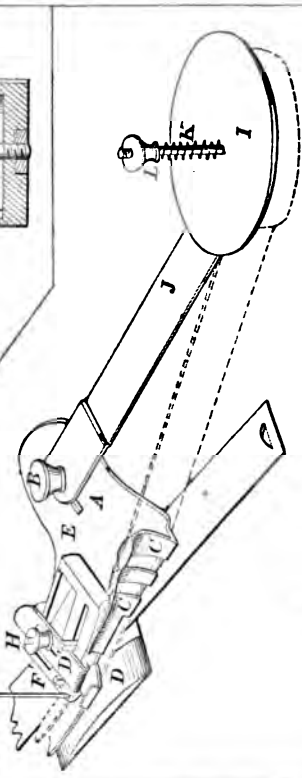

42616

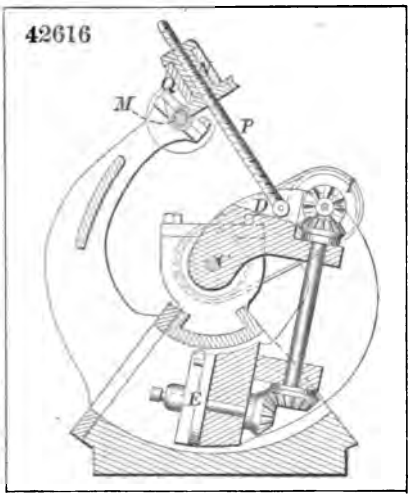

42618

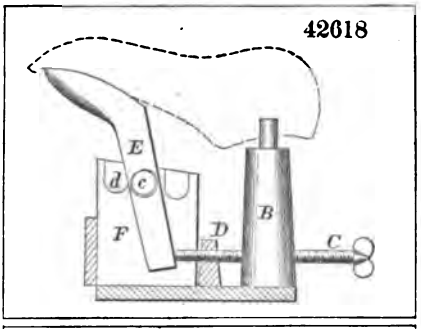

42622

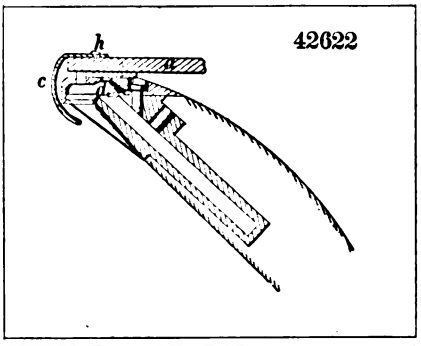

42621

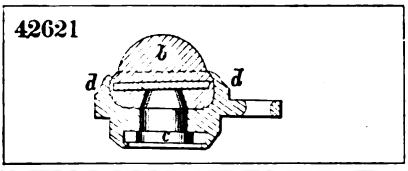

42617

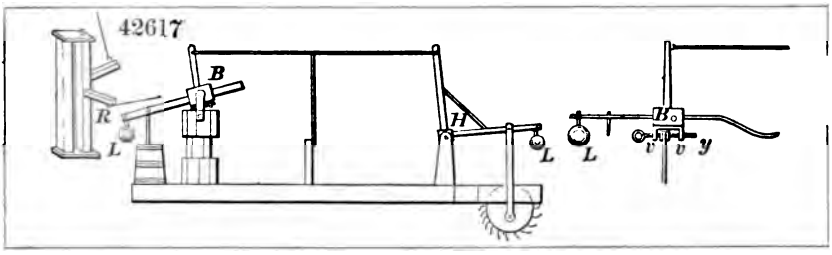

42623

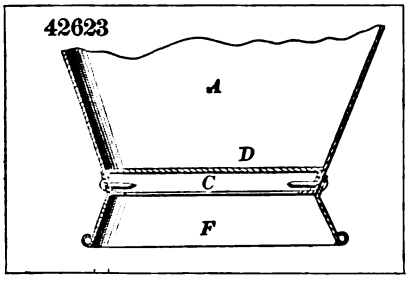

42624

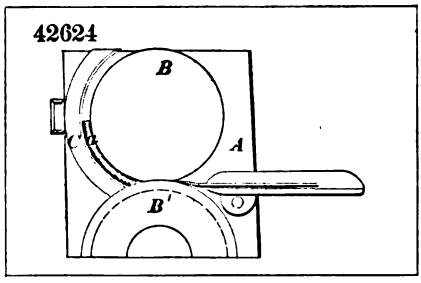

42620

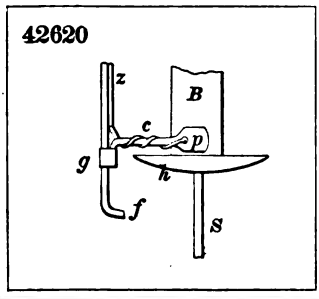

42625

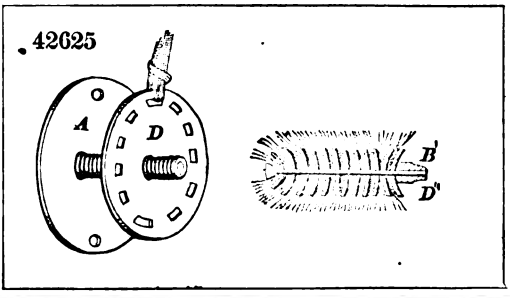

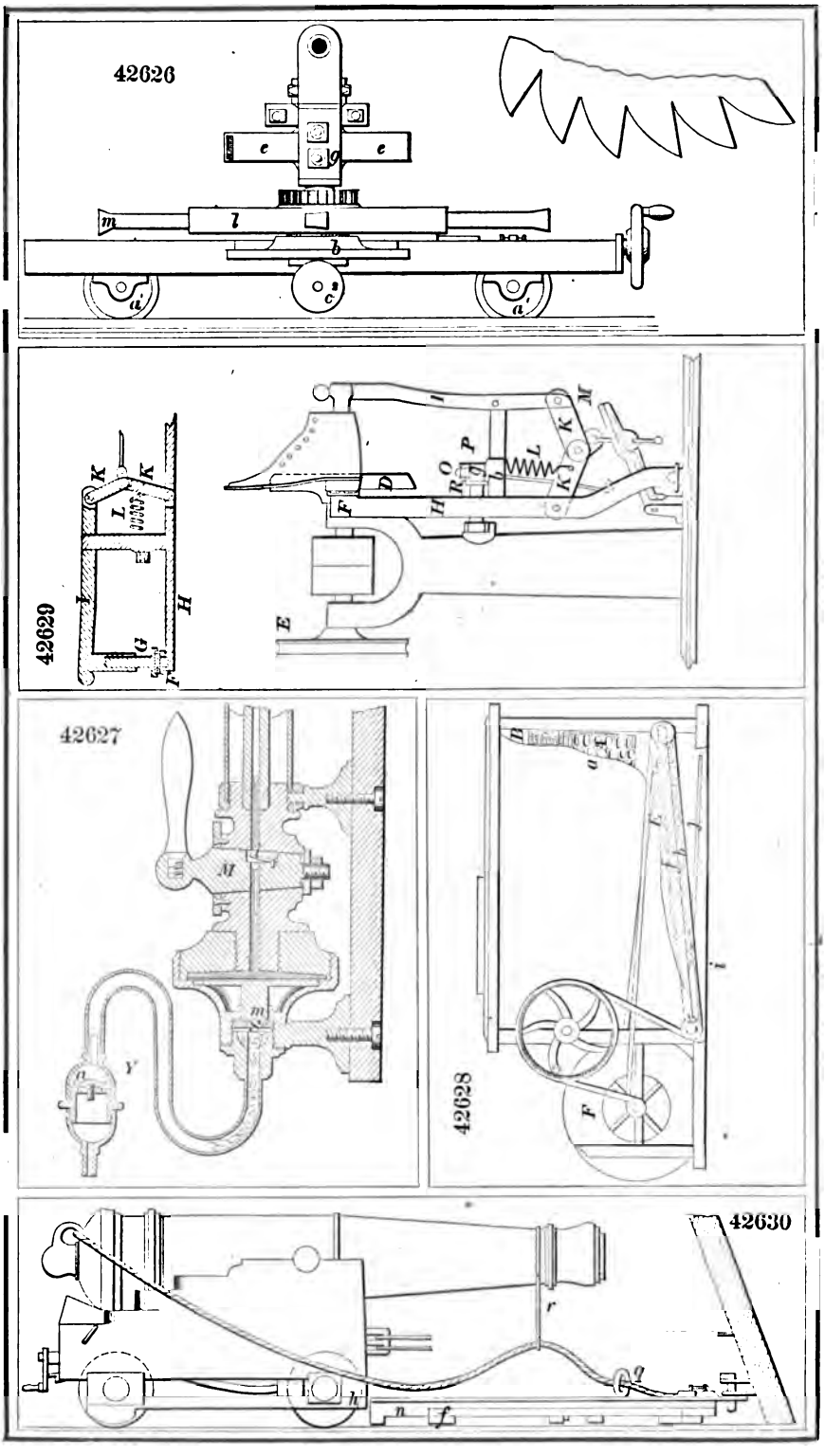
42626
42629
42627
42628
42630

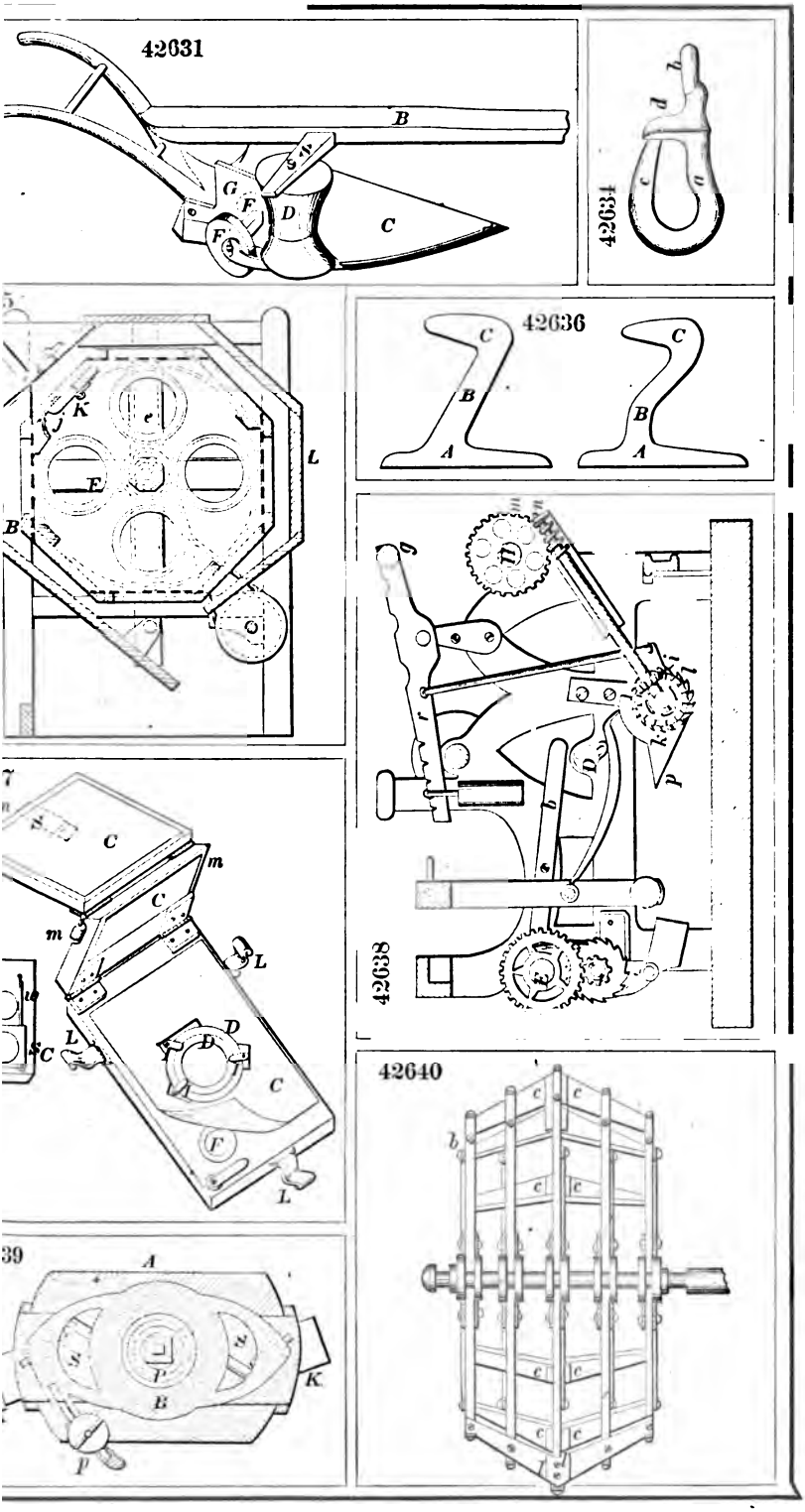
42631
42634
42636
42638
42640

42641

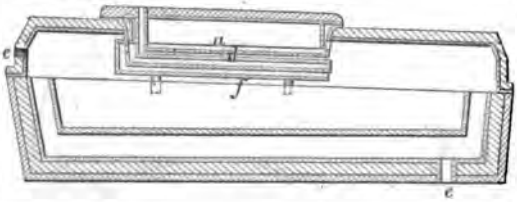

42644

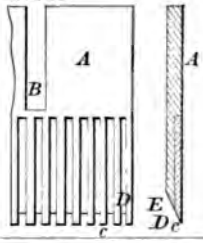

42642

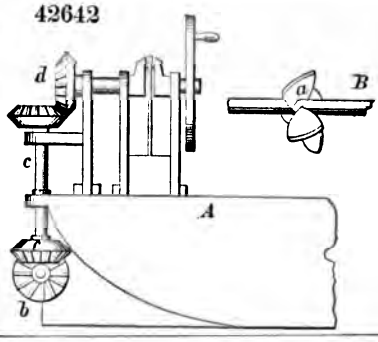

42645

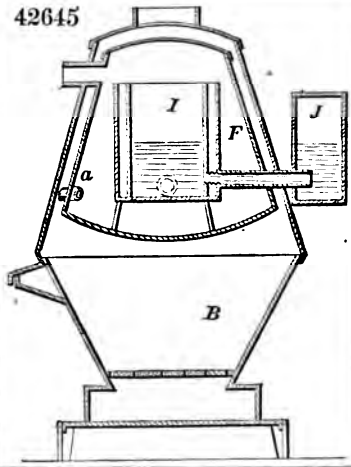

42646

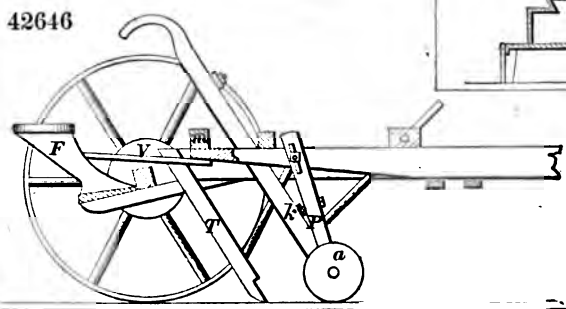

42643

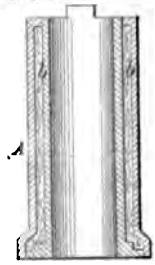

42647

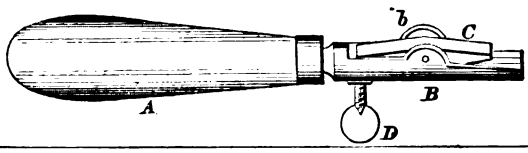

42648

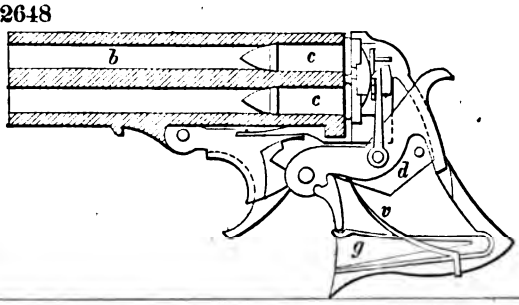

42649

42650

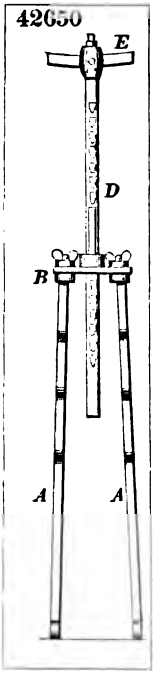

42652

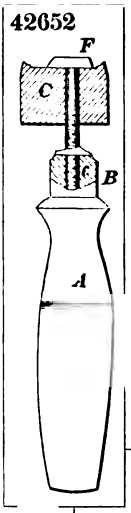

42651

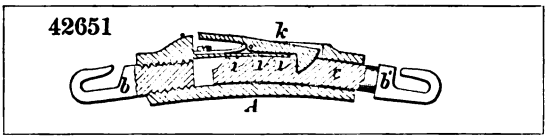

42653

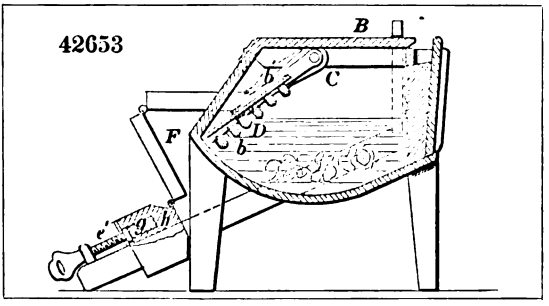

42654

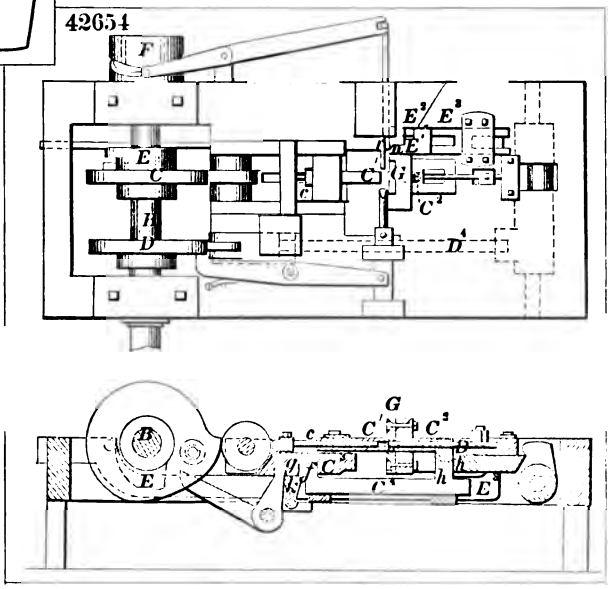

42655

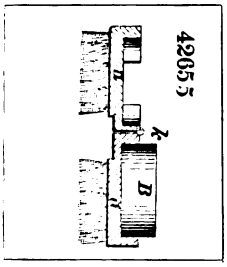

42656

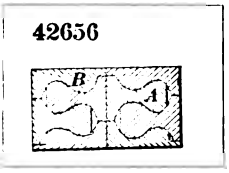

42658

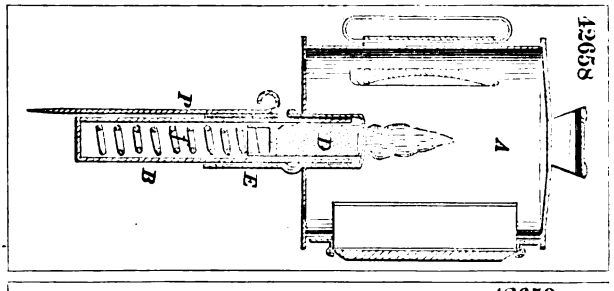

42657

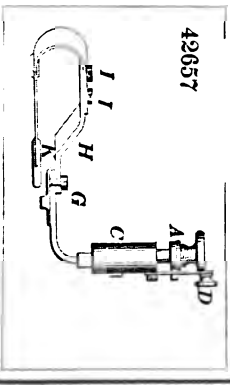

42659

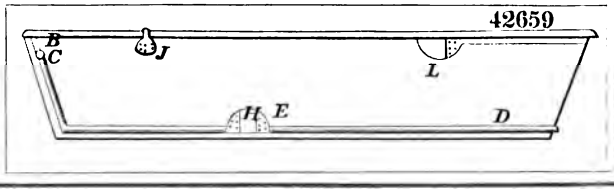

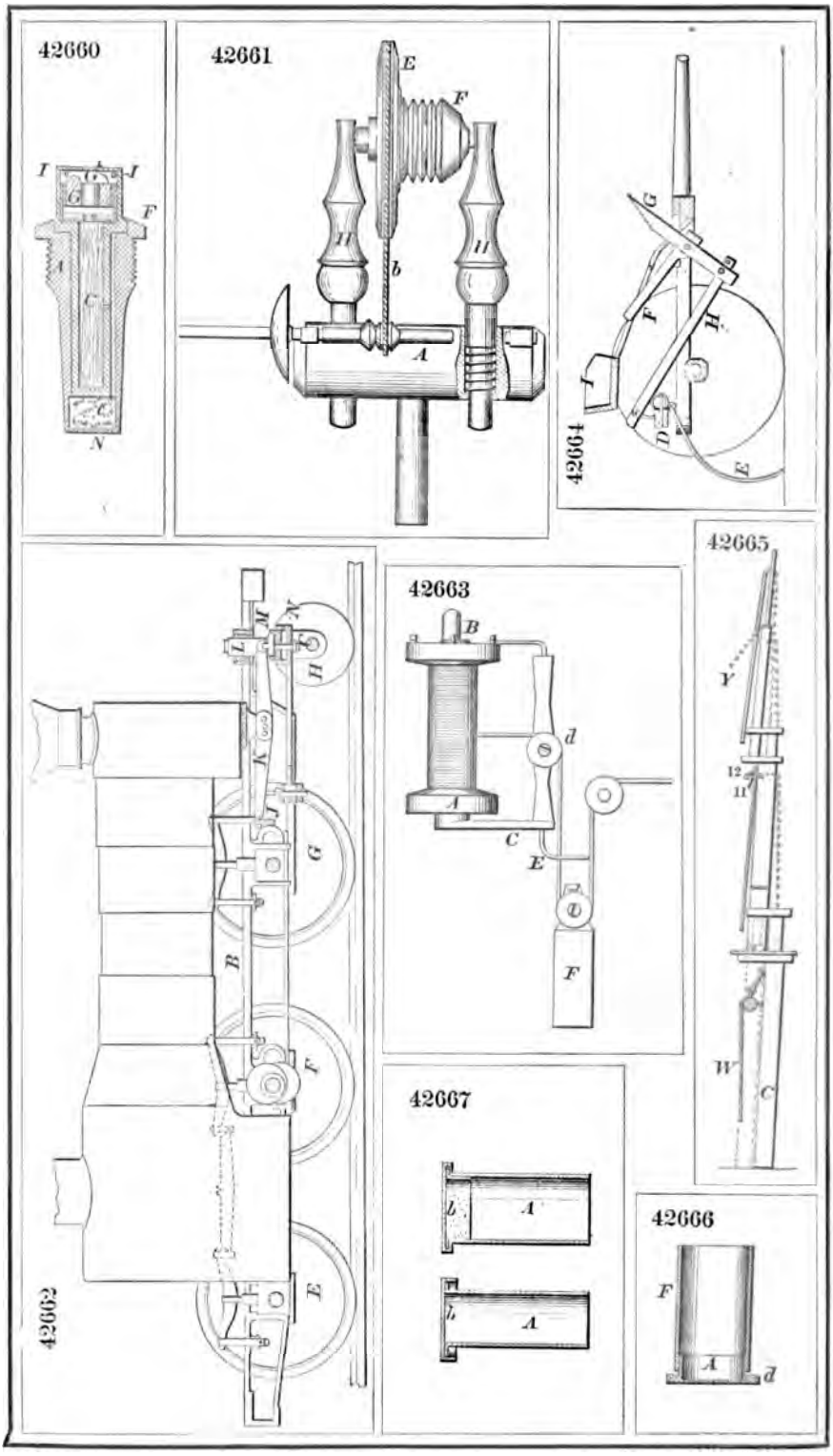
42660
42661
42662
42663
42664
42665
42666
42667

42669

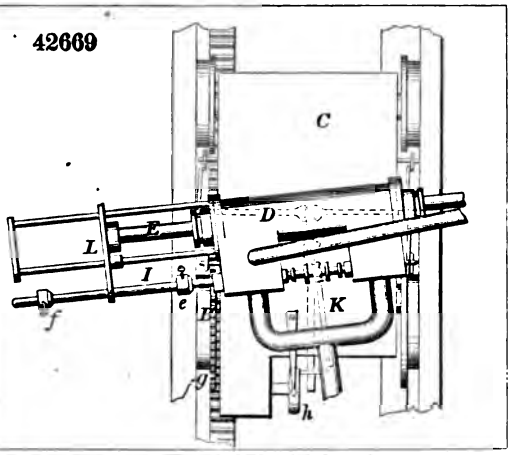

42676

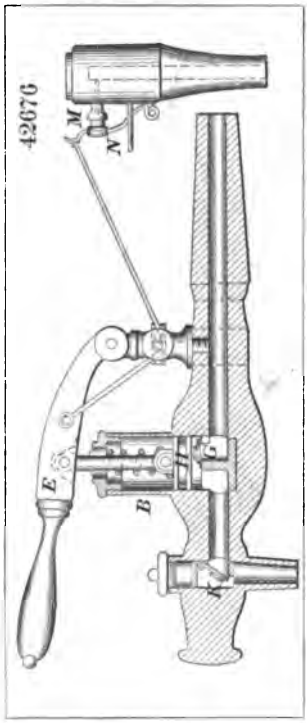

42670

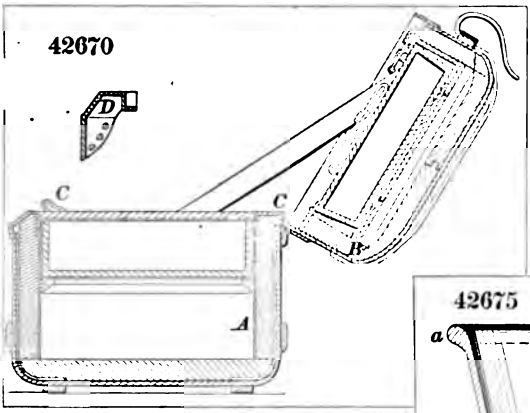

42675

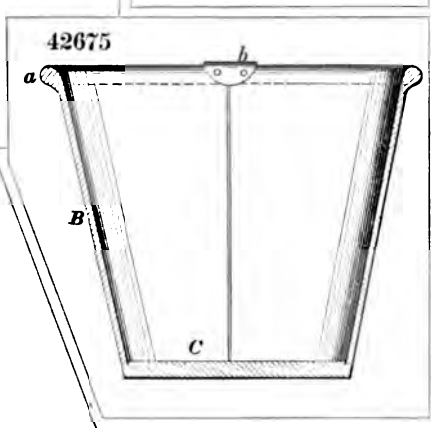

42672

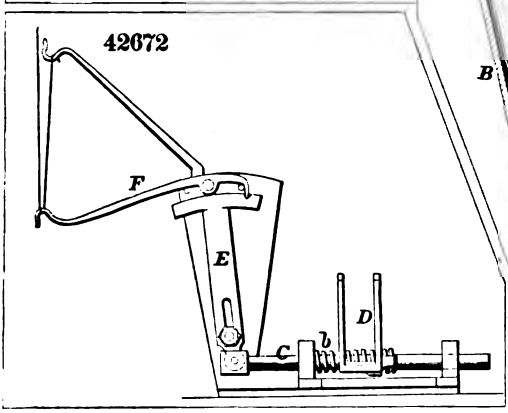

42677

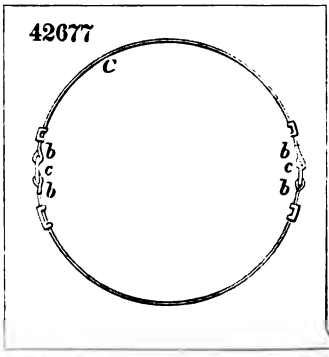

42674

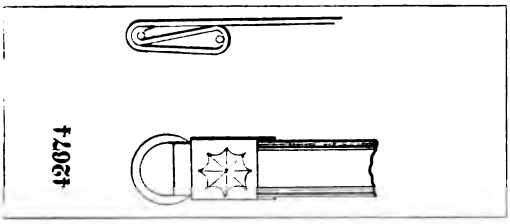

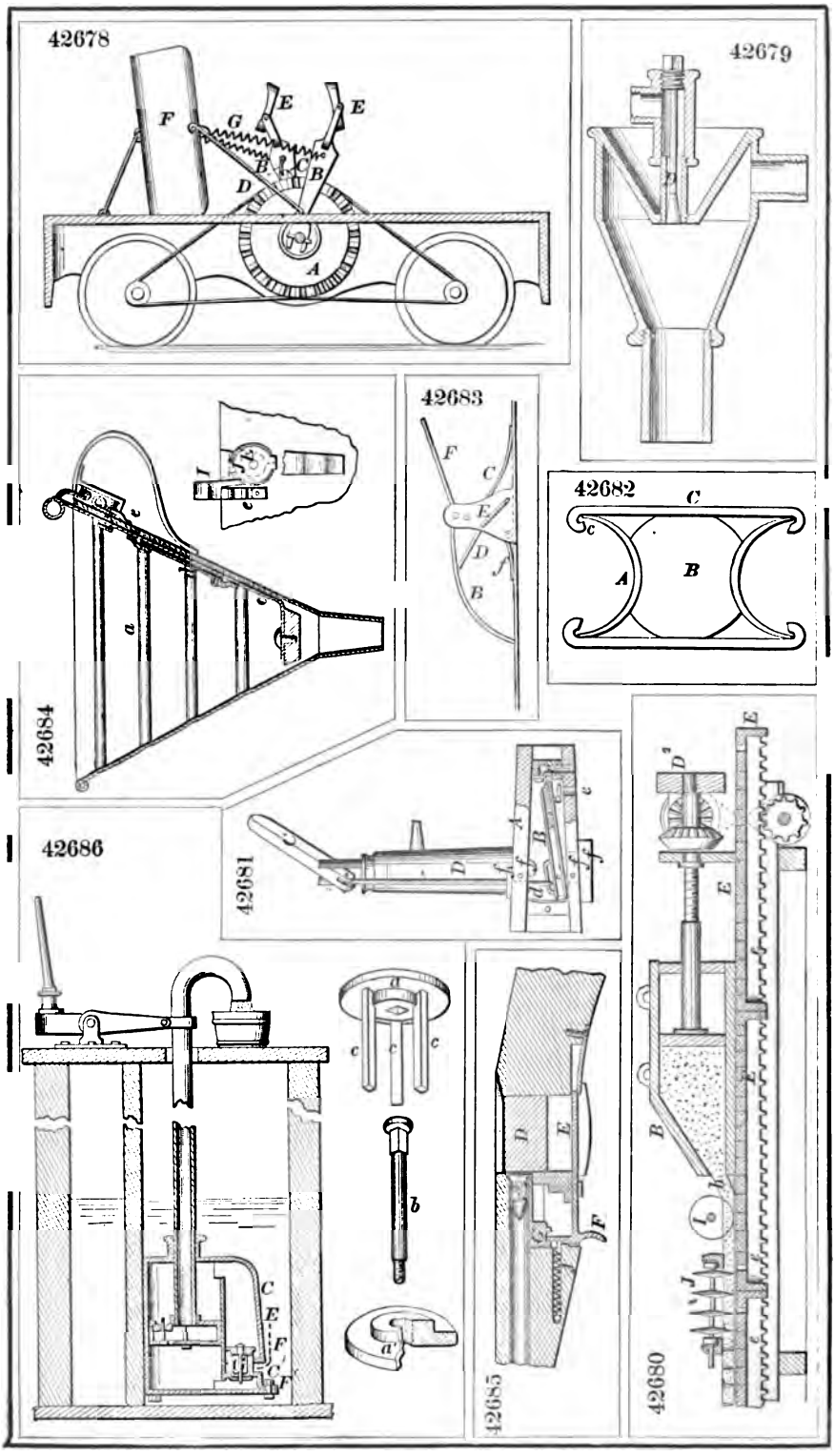
42678
42679
42682
42683
42684
42686
42681
42685
42680

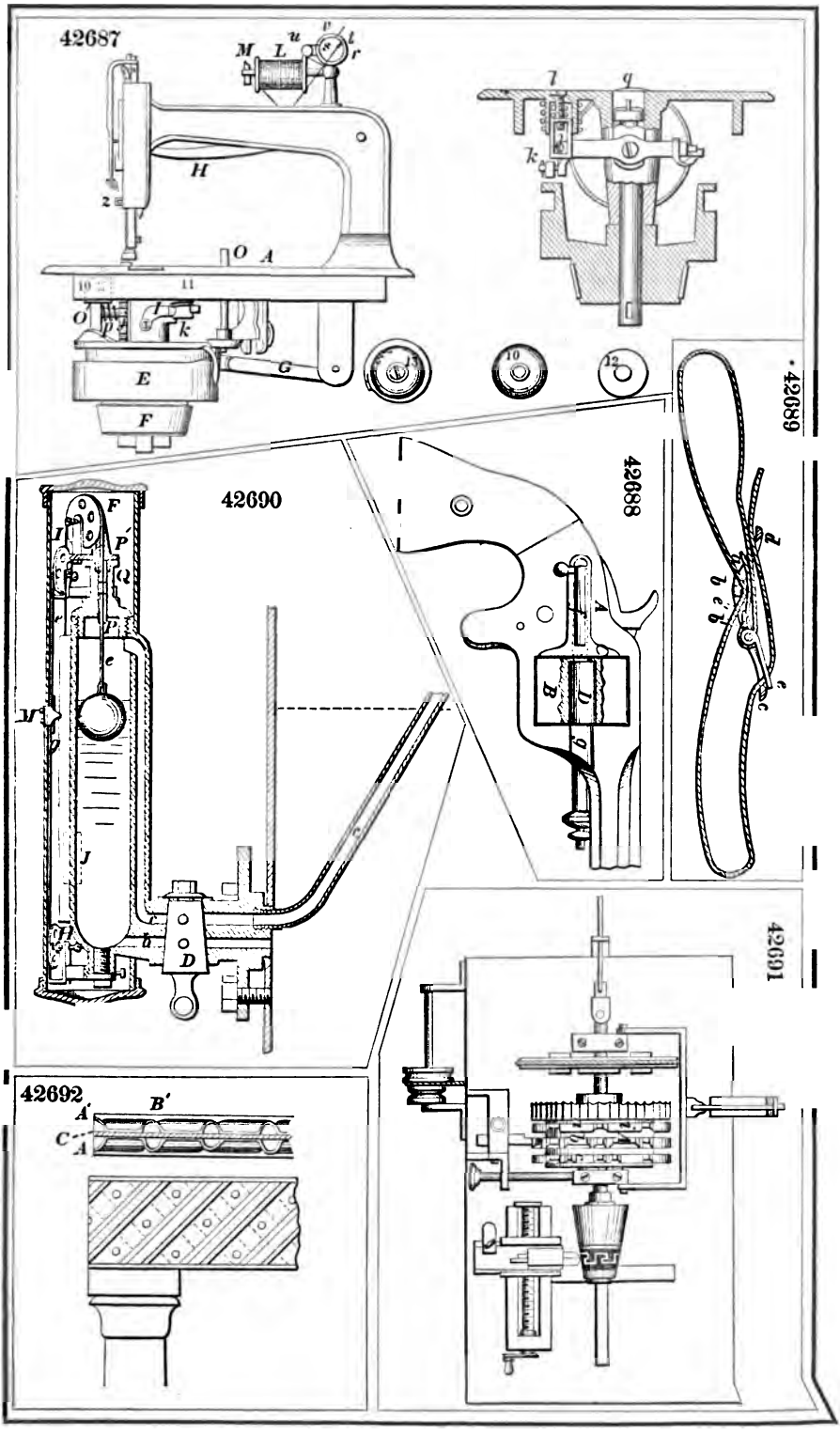
42687
42688
42689
42690
42691
42692

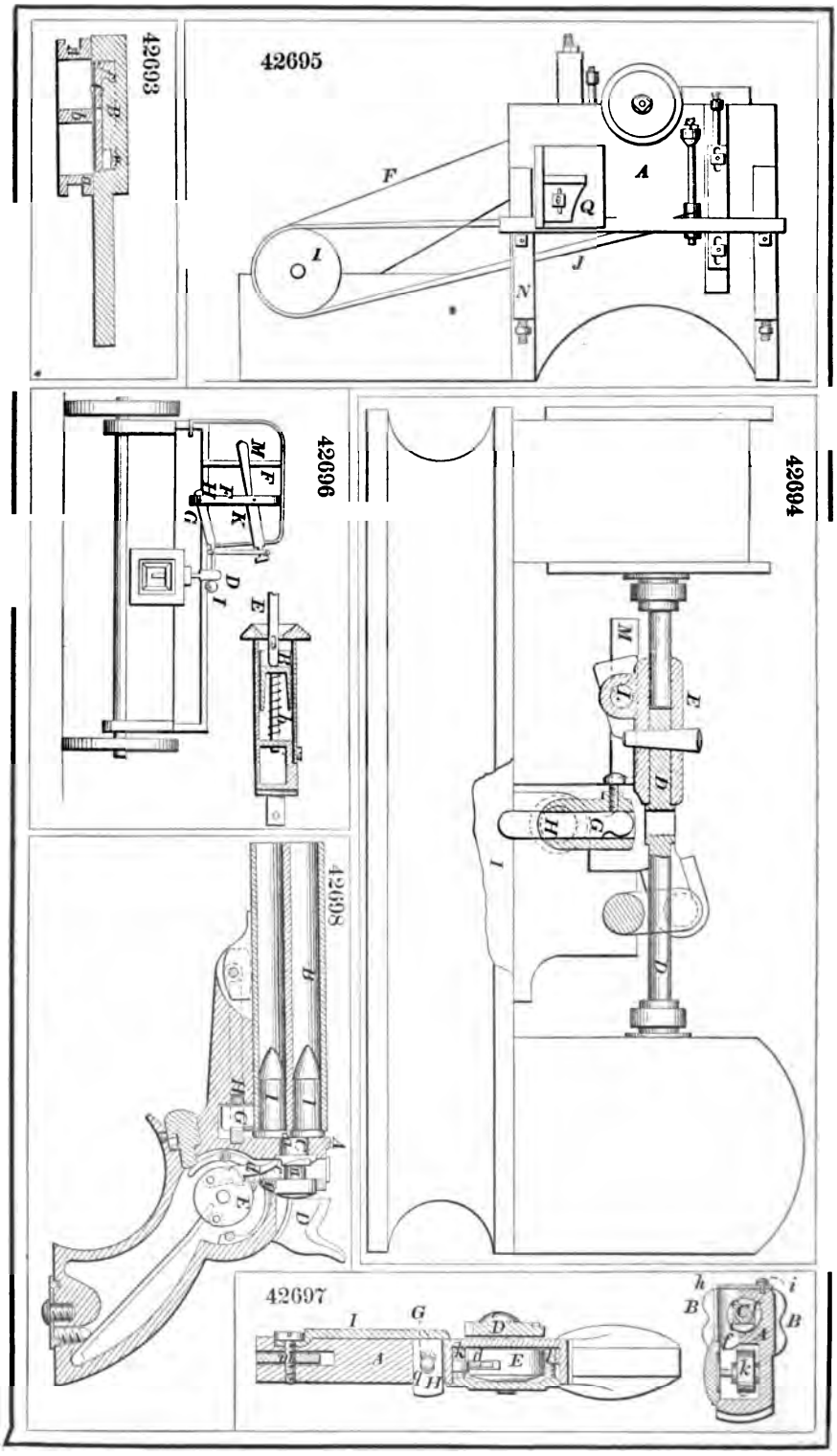
42693
42695
42696
42694
42698
42697

42699

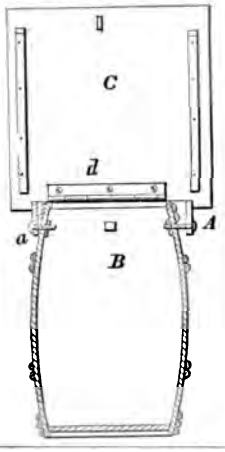

42700

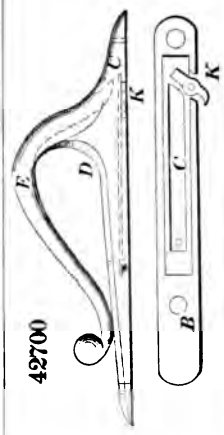

42703

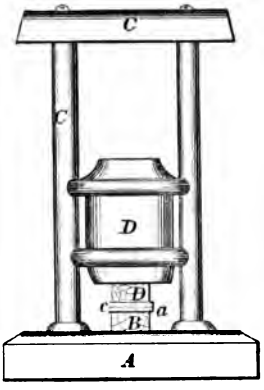

42702

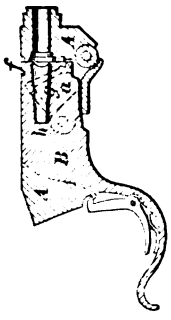

42705

42701

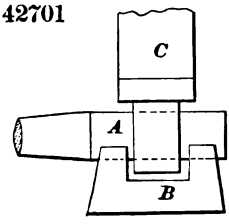

42706

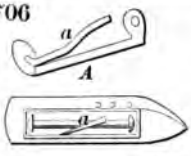

42707

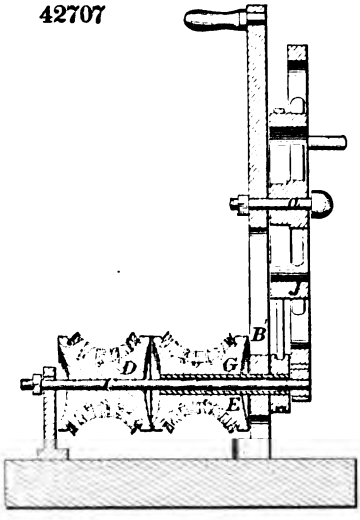

42708

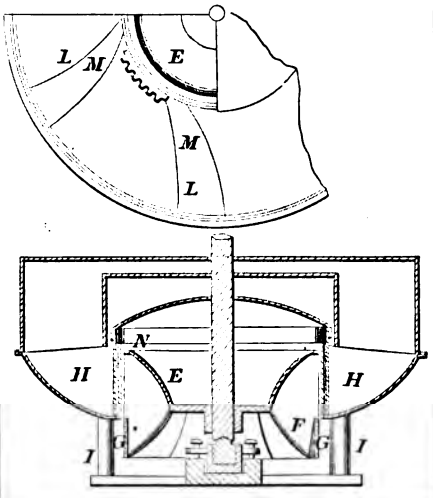

42700

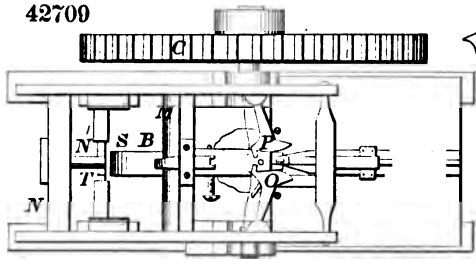

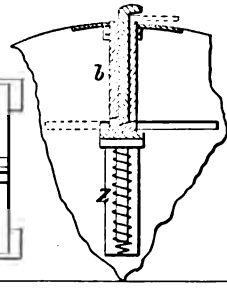

42713

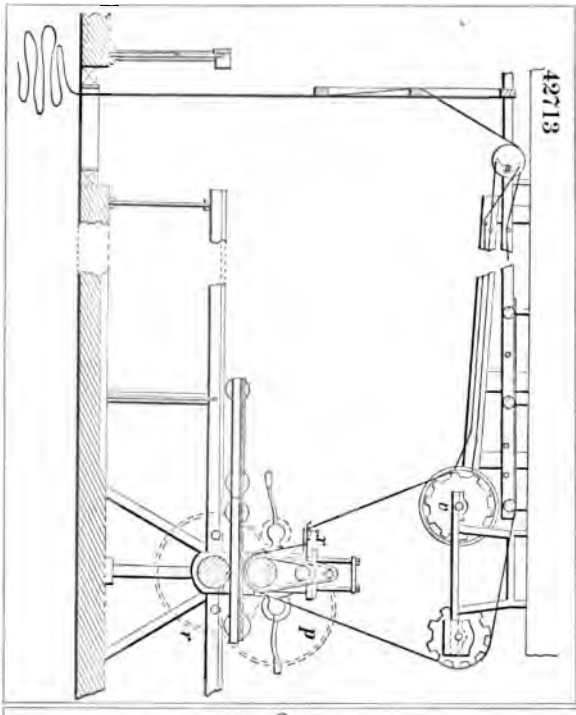

42711

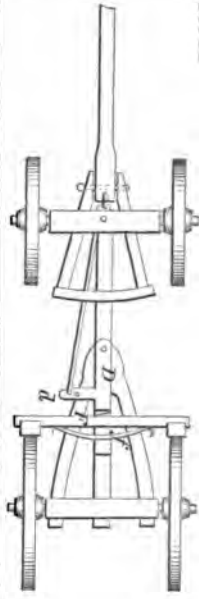

42710

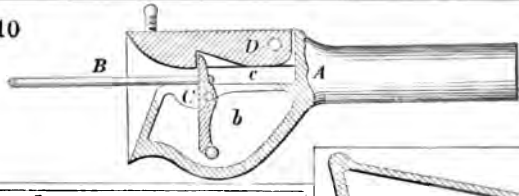

42714

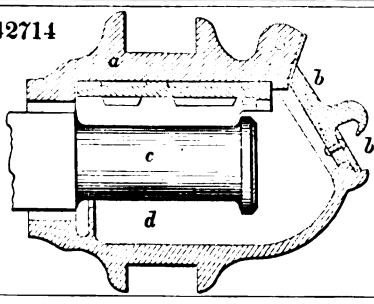

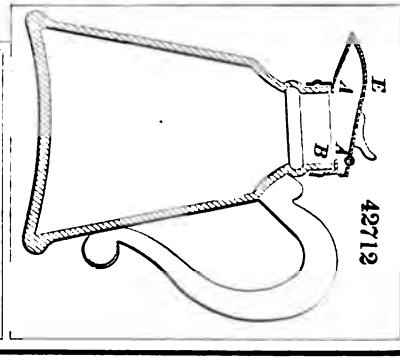

42712

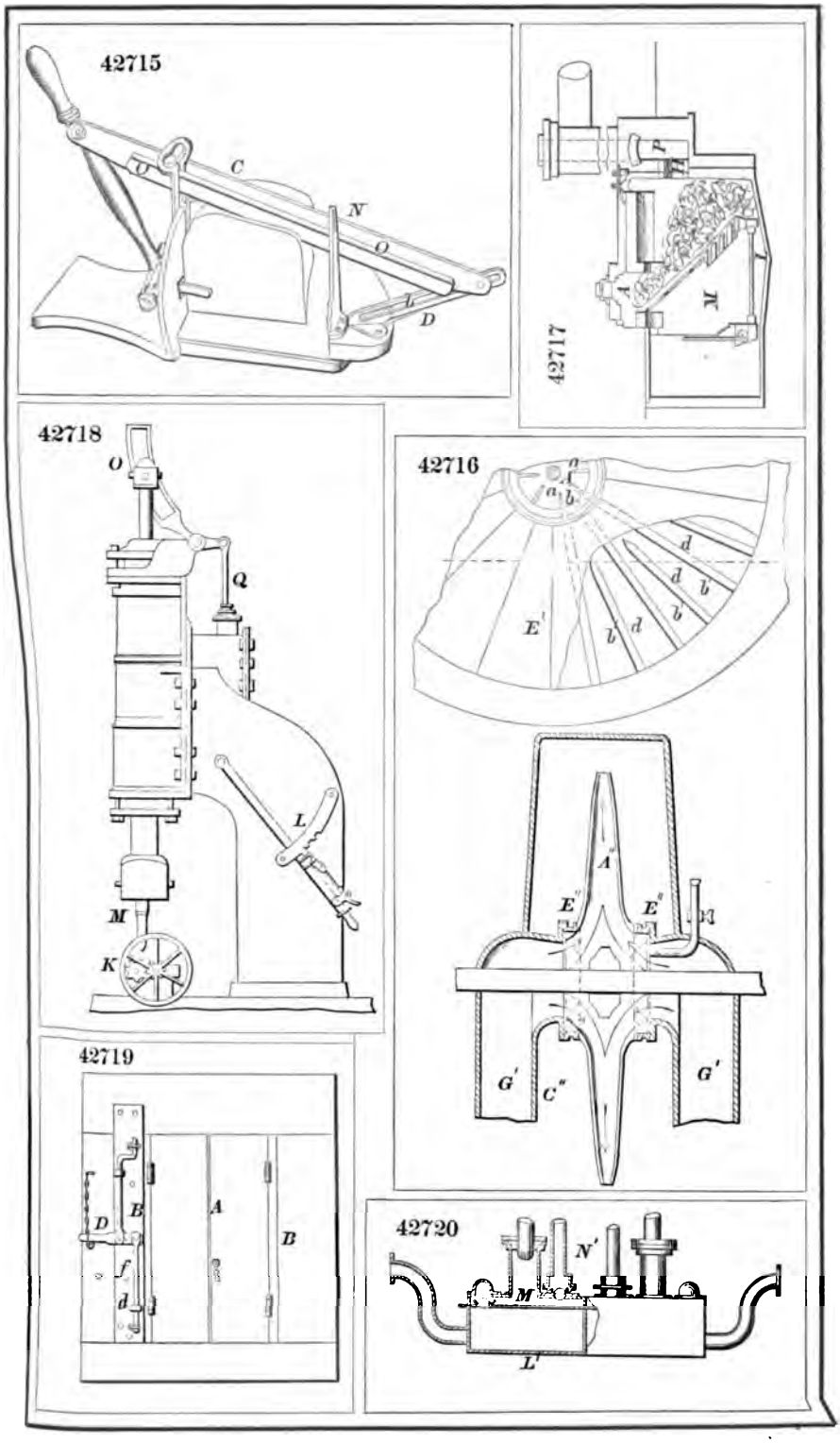
42715
C
N
O
L
D
42717
M
42718
O
Q
L
M
K
42716
a
A
a
b
d
d
b
b
E'
b
d
A''
E''
E''
M
G'
C''
G'
42719
D
B
A
B
f
d
42720
N'
M
L'

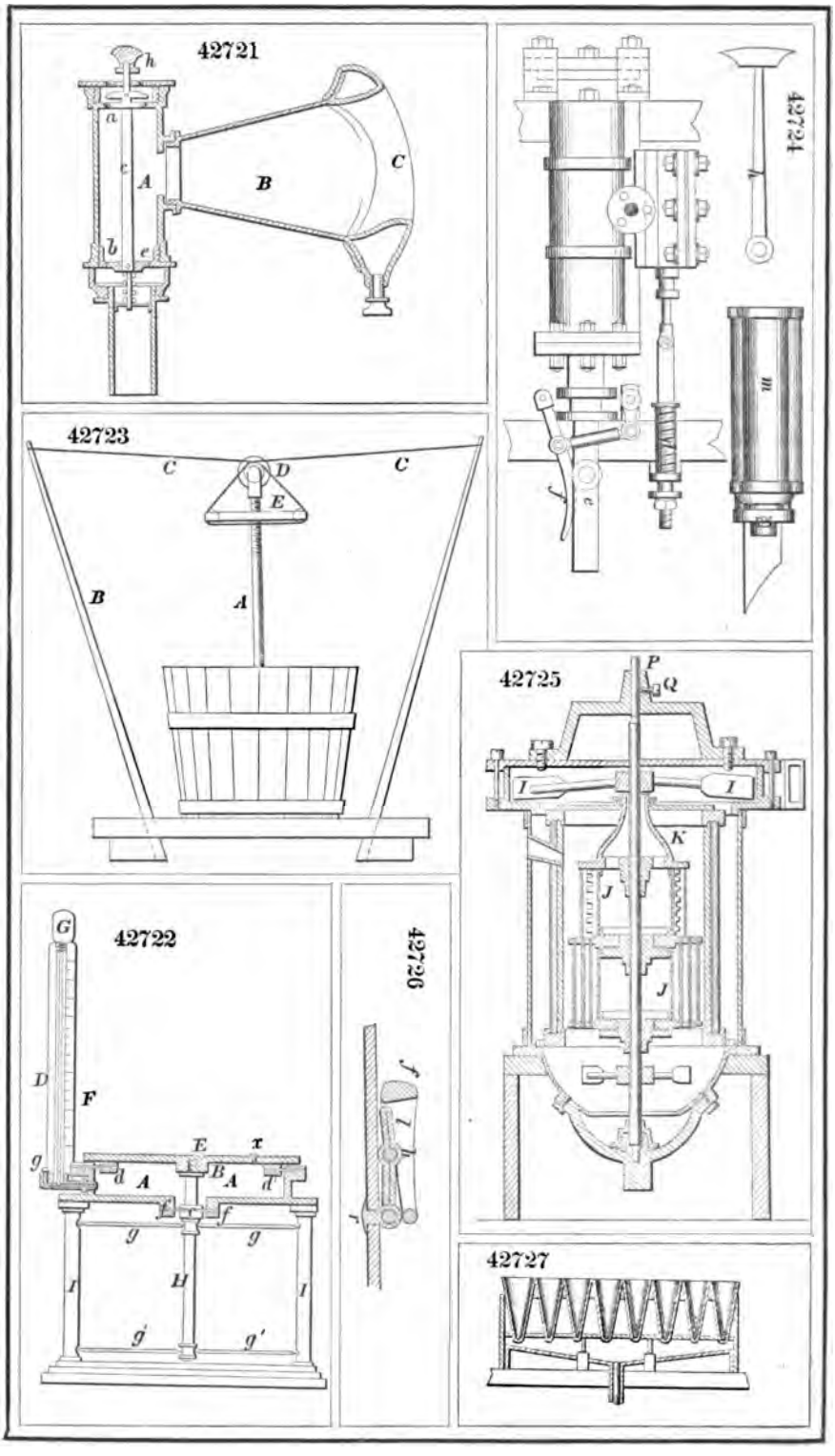
42721
42722
42723
42724
42725
42726
42727

42728

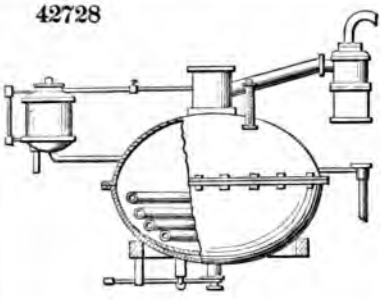

42732

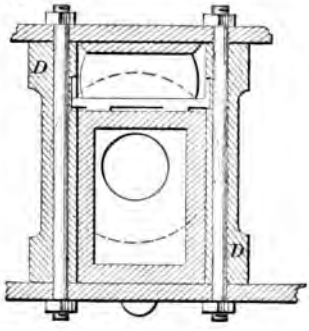

42730

42731

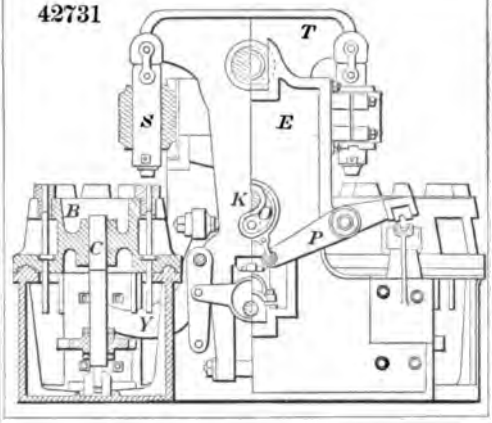

42729

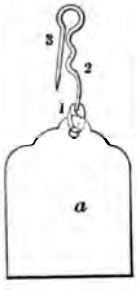

42733

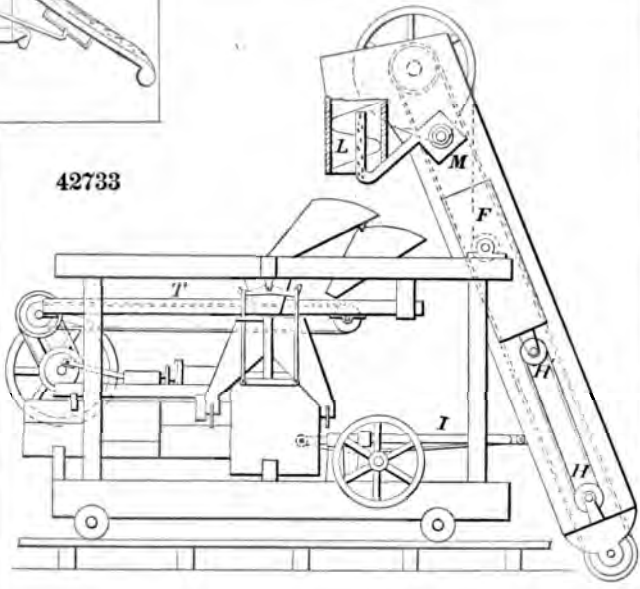

42734

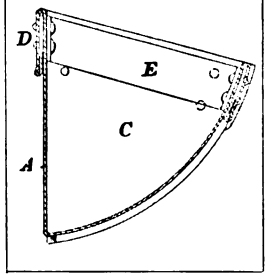

42736

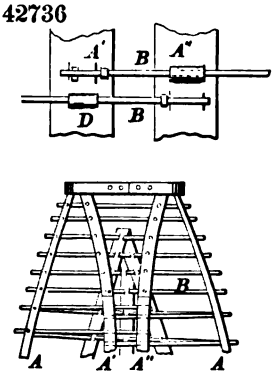

42739

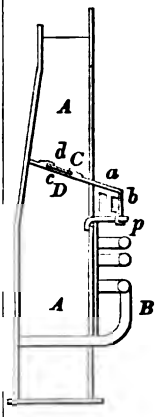

42735

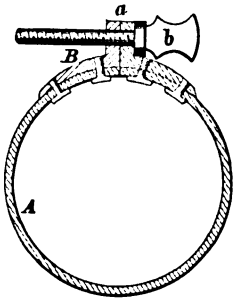

42738

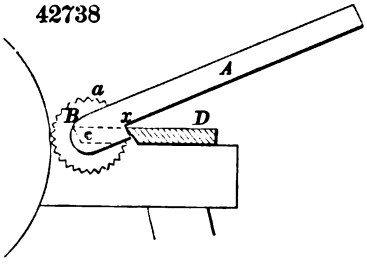

42740

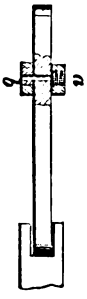

42741

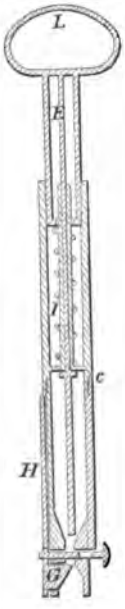

42737

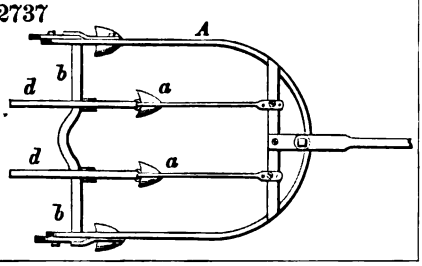

42742

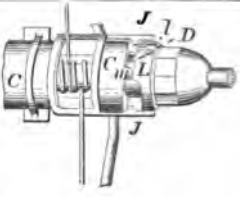

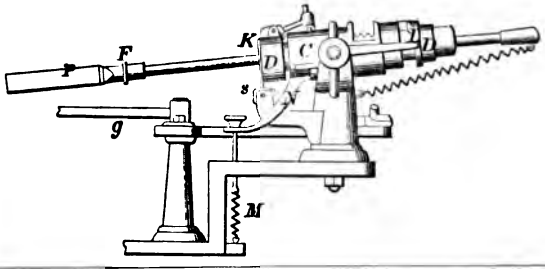

42743

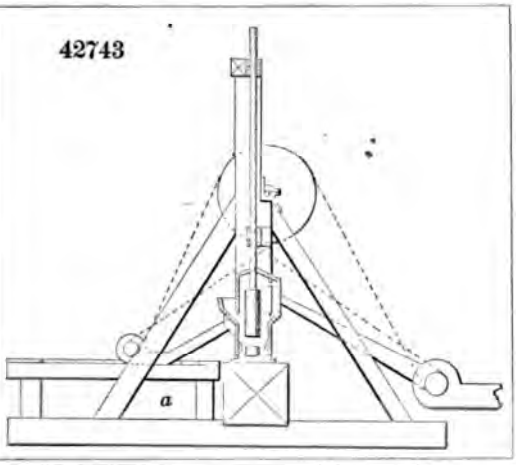

42744

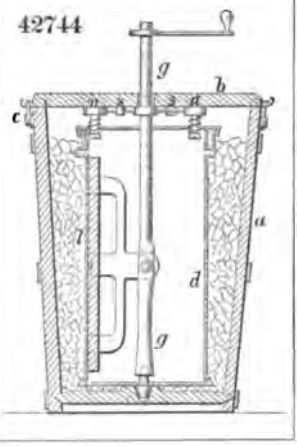

42745

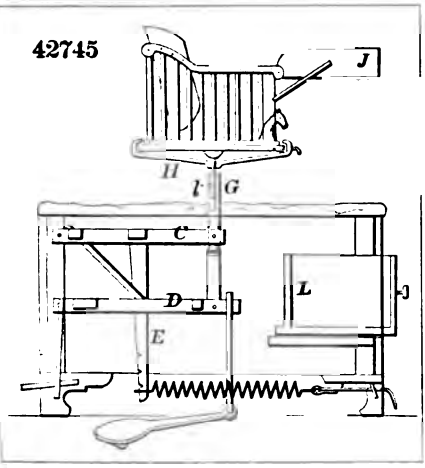

42747

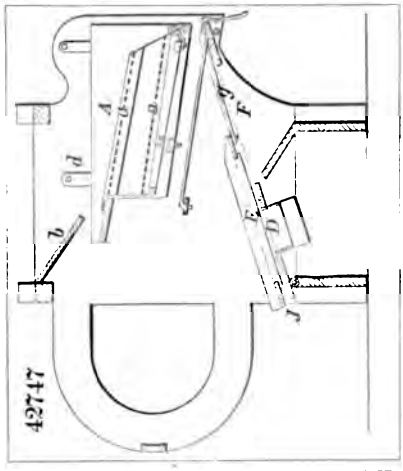

42746

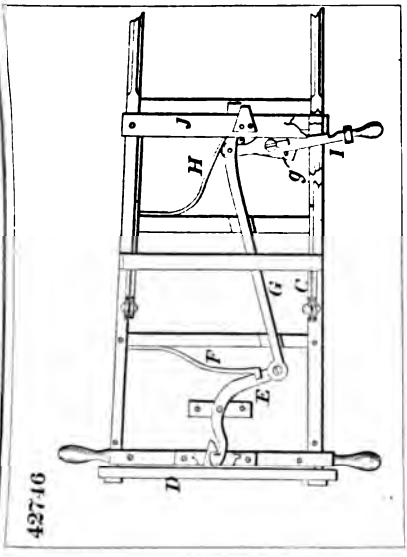

42748

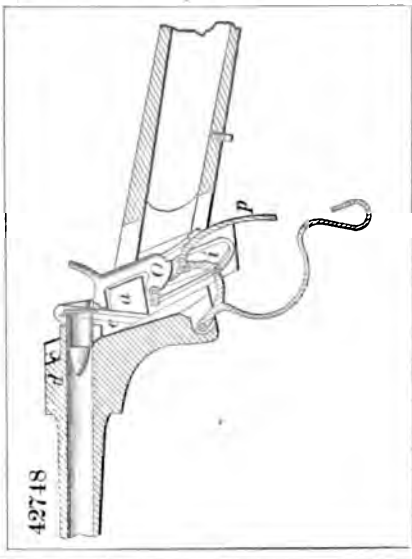

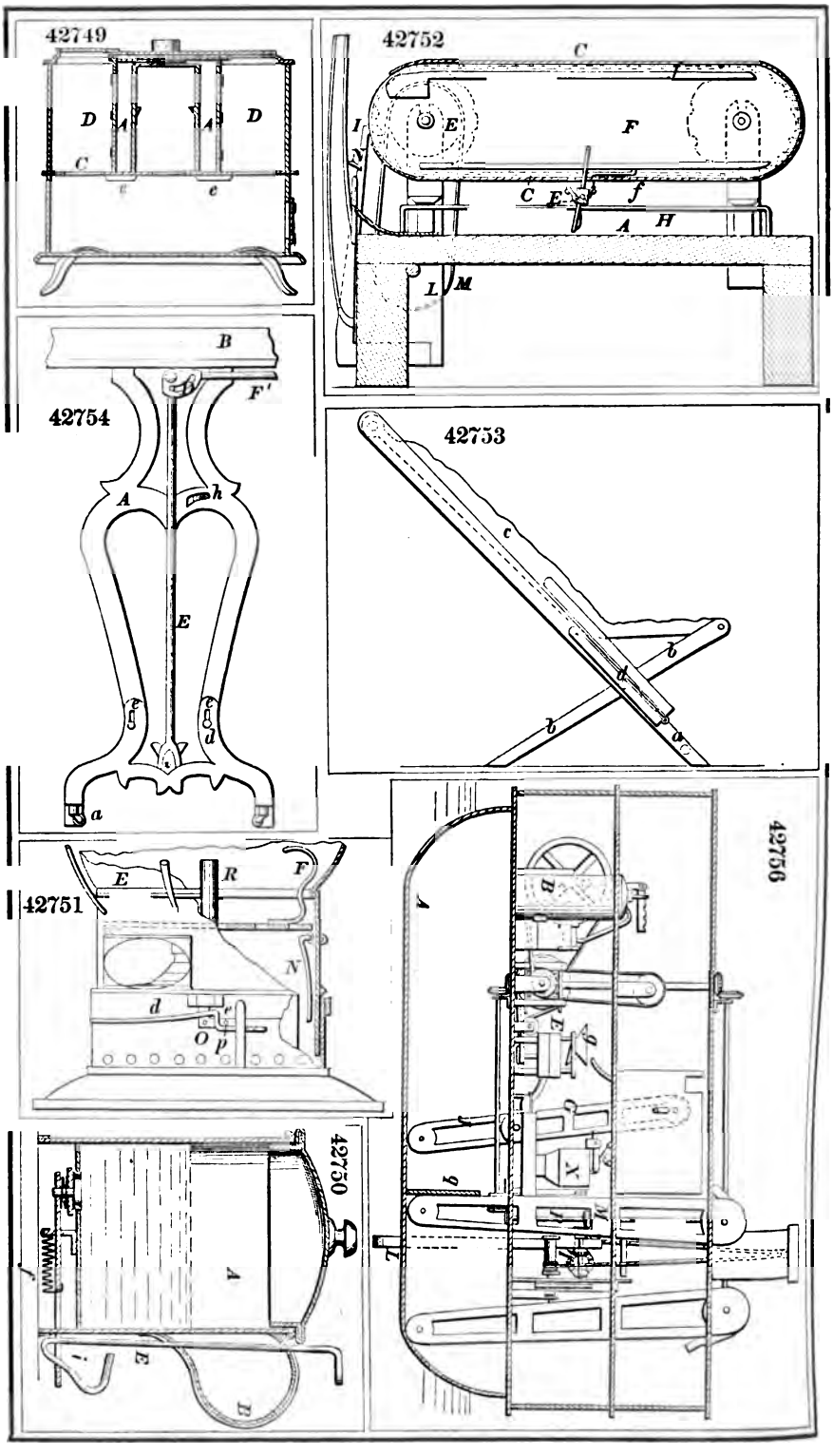
42749
42752
42753
42754
42751
42750
42756

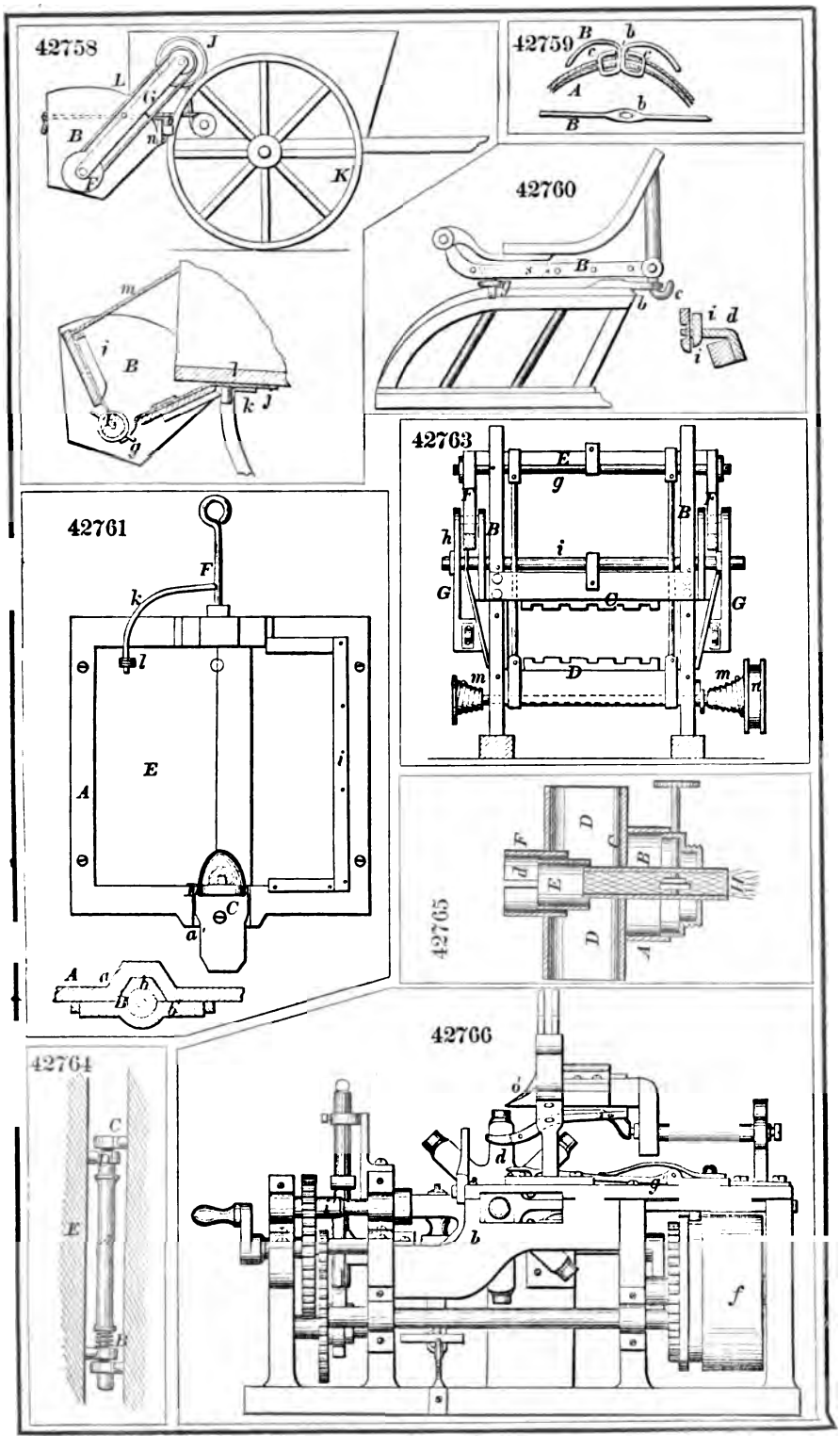
42758
42759
42760
42761
42763
42764
42765
42766

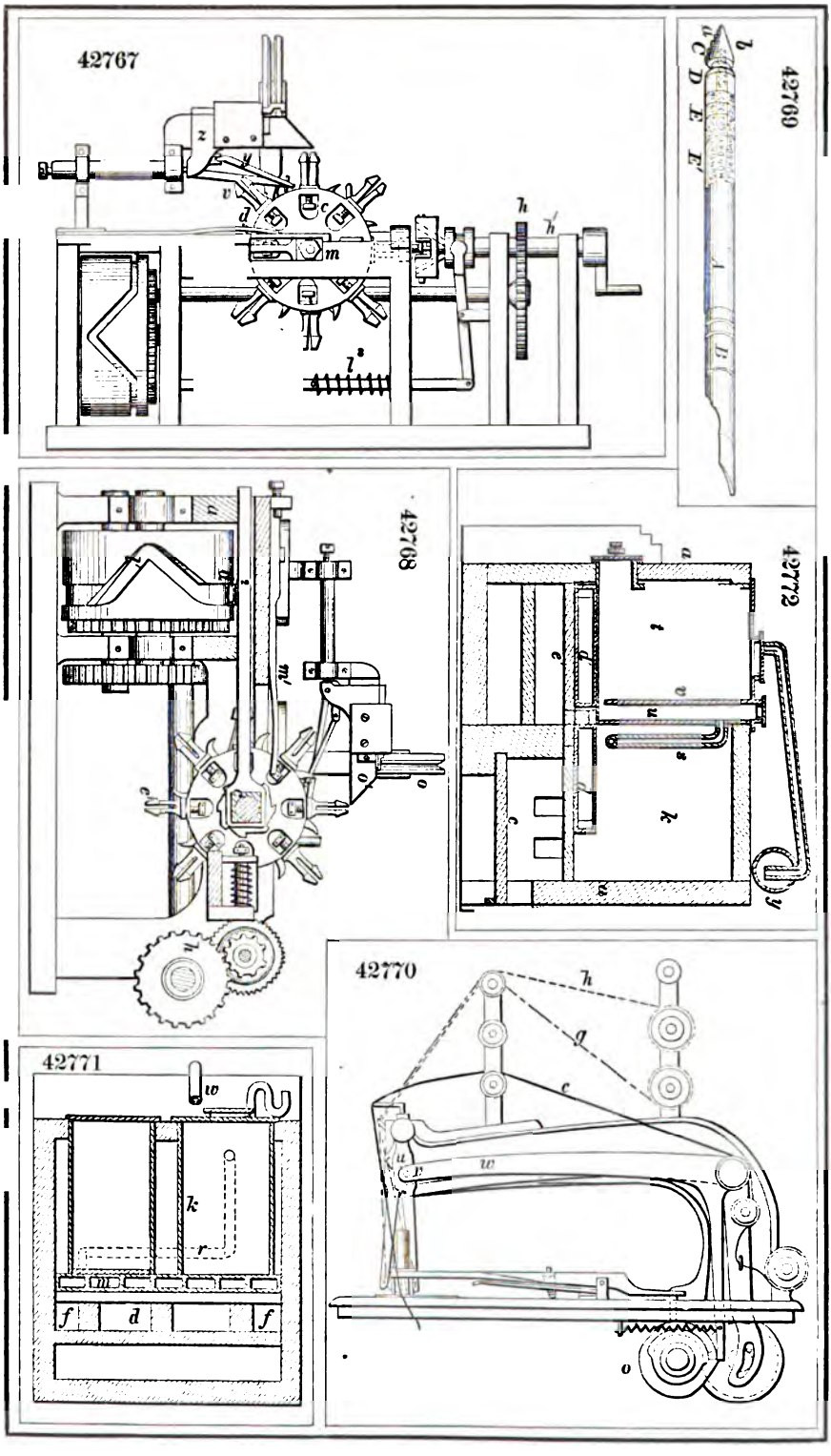
42767
42769
42768
42772
42770
42771

42773

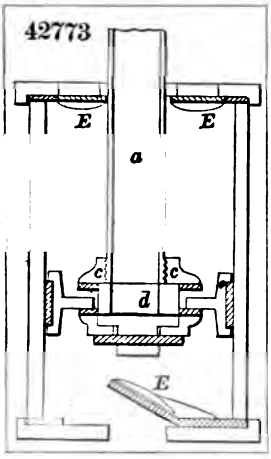

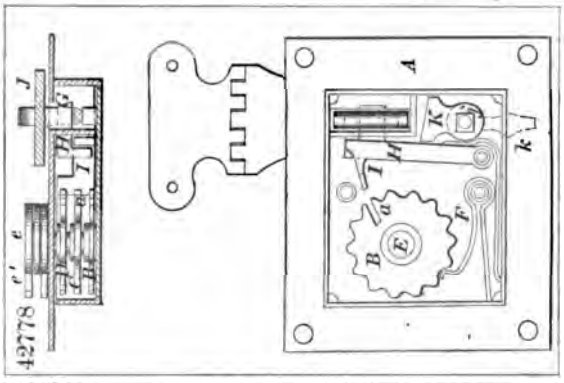

42774

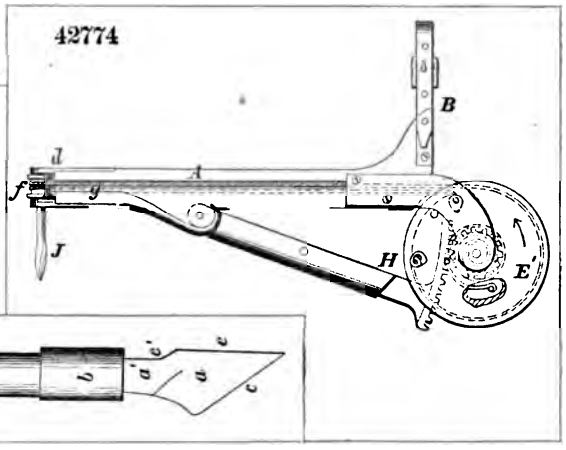

42775

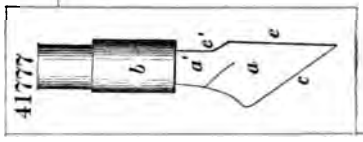

42776

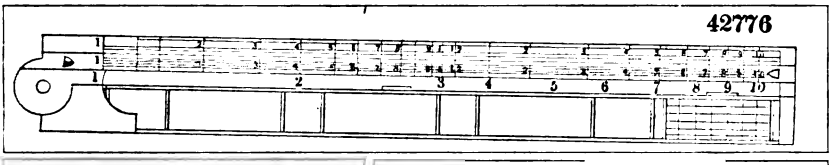

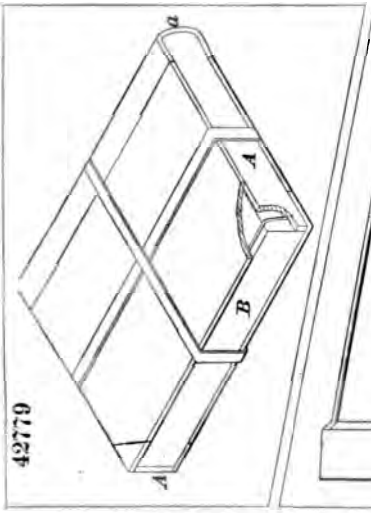

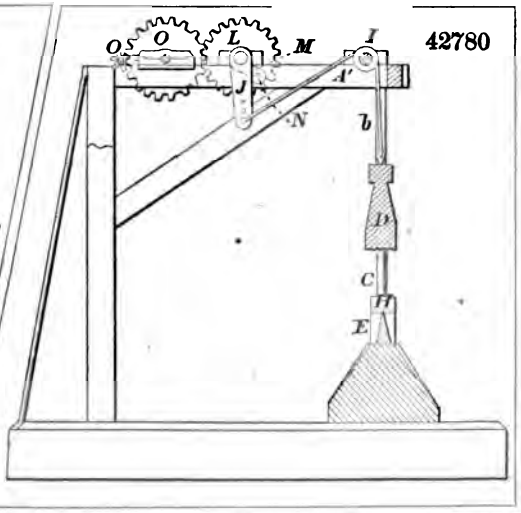

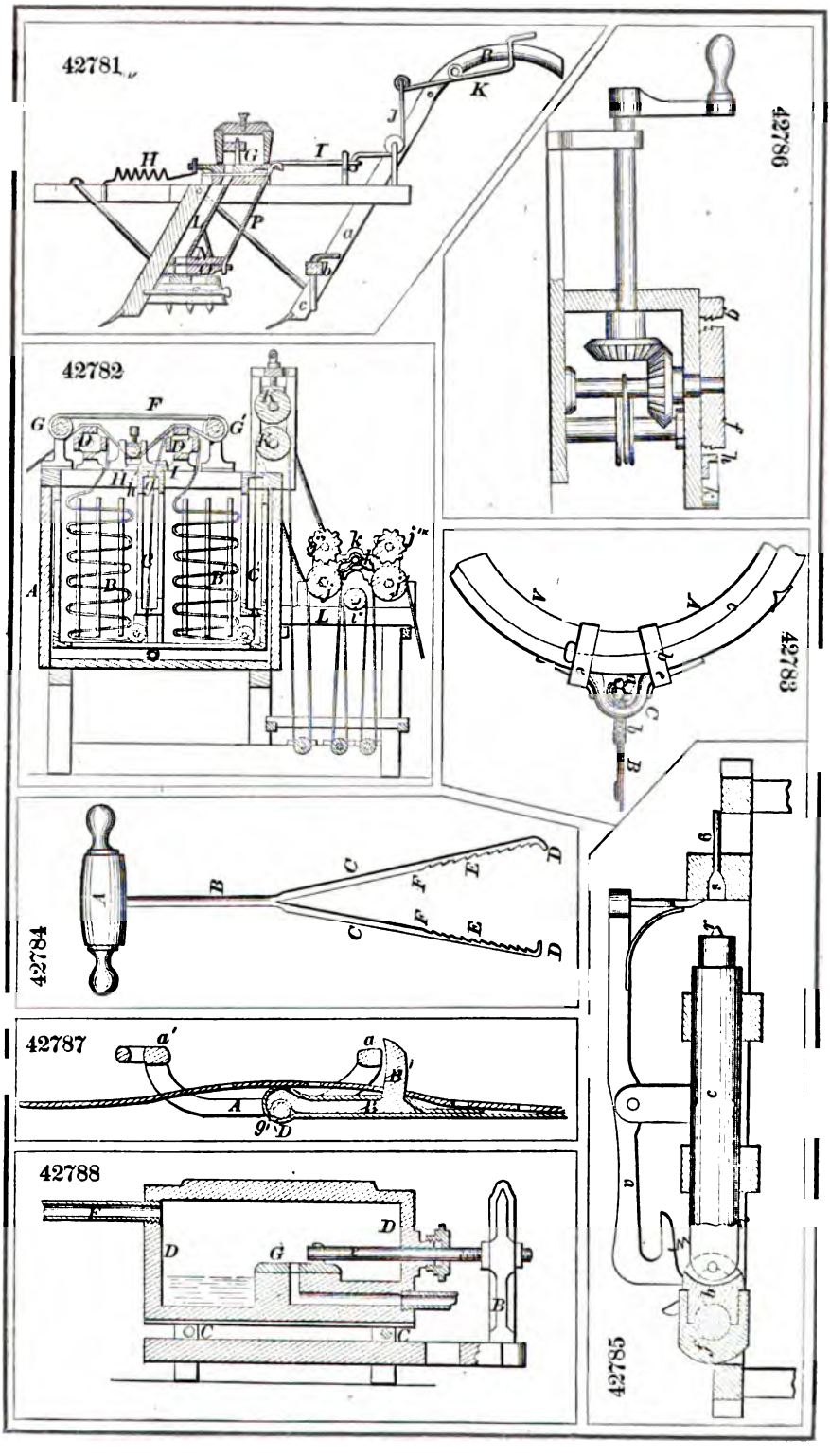
42781
42782
42783
42784
42785
42786
42787
42788

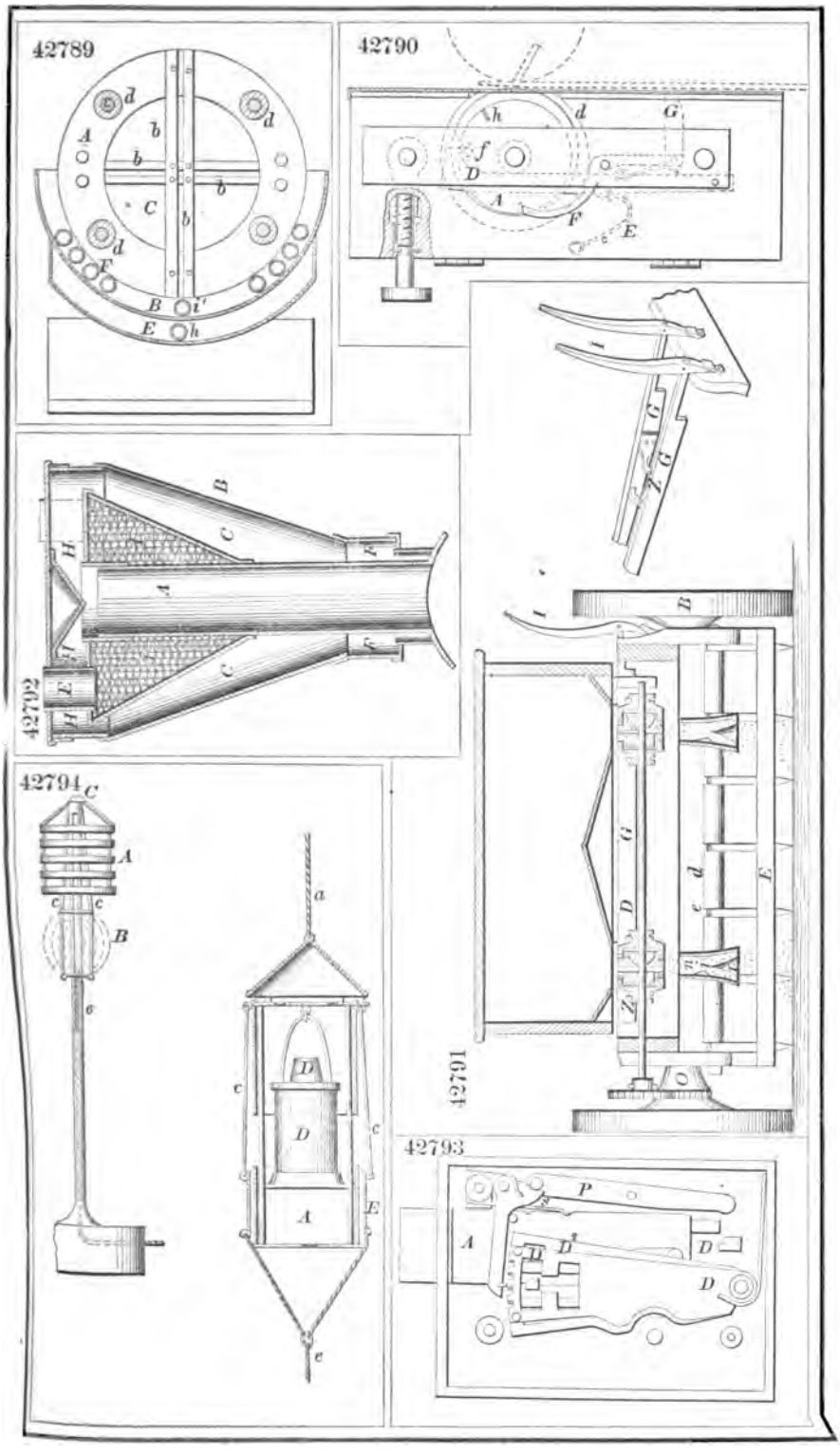
42789
42790
42791
42792
42793
42794

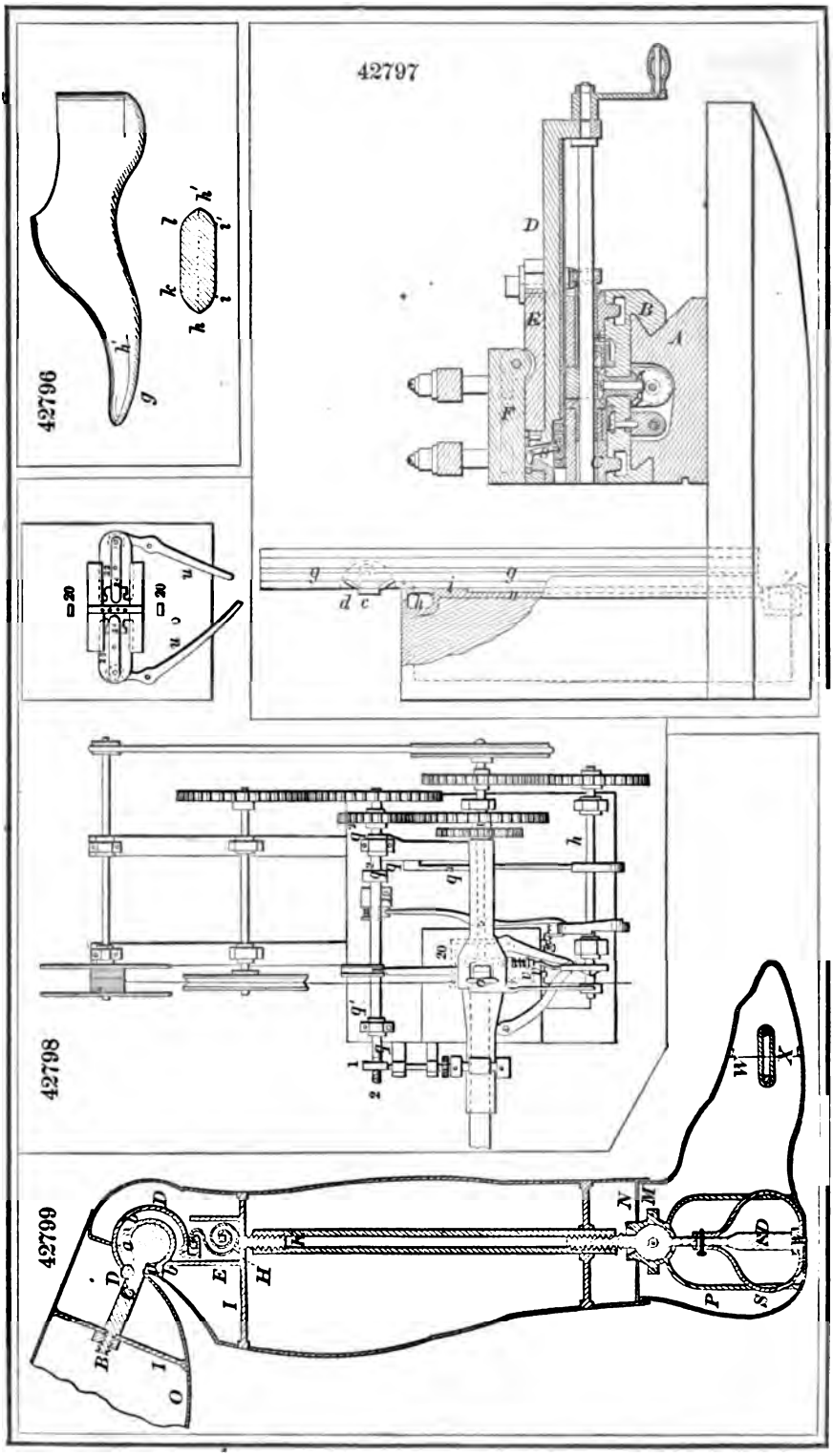
42796
42797
42798
42799

42800

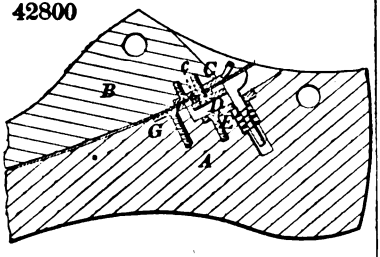

42805

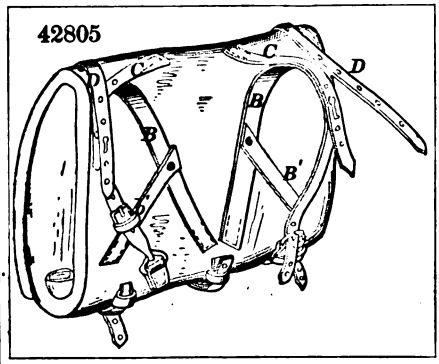

42801

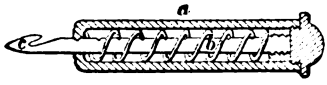

42804

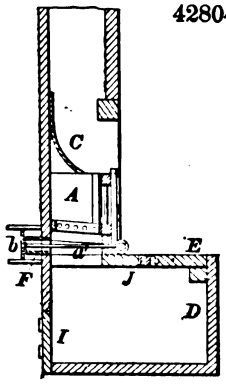

42802

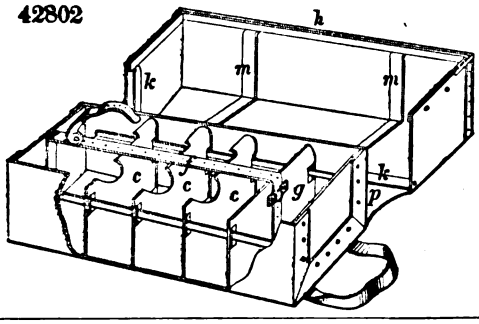

42807

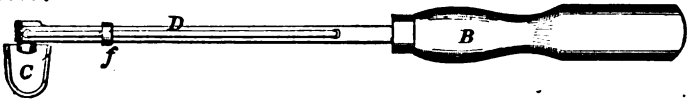

42808

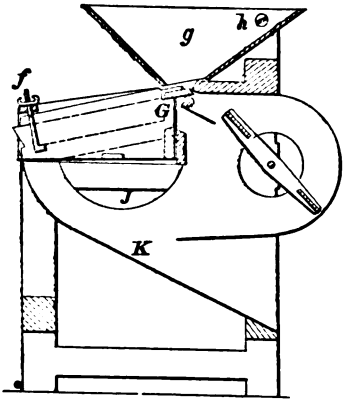

42809

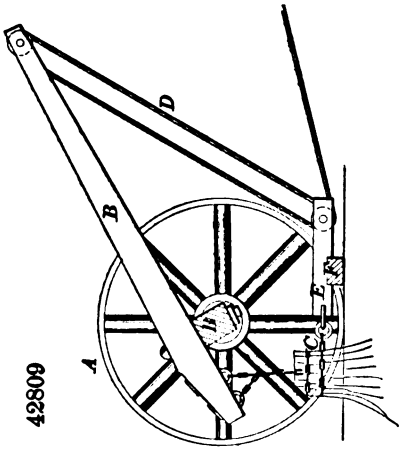

42810

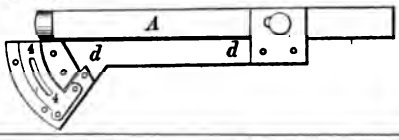

42817

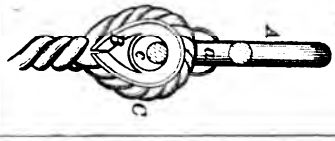

42811

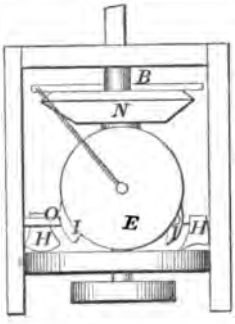

42815

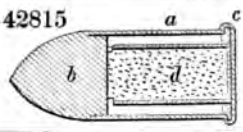

42816

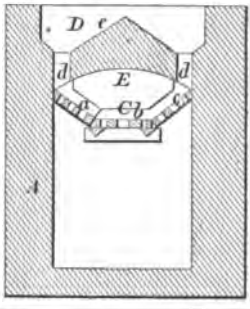

42813

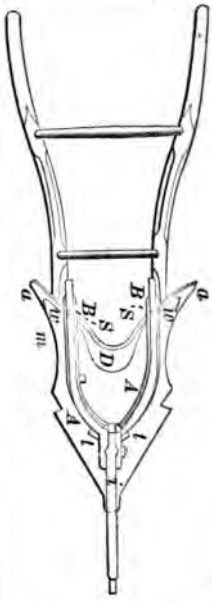

42812

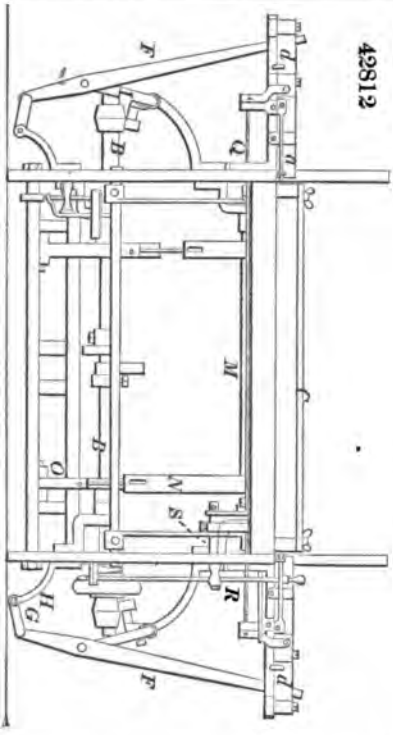

42818

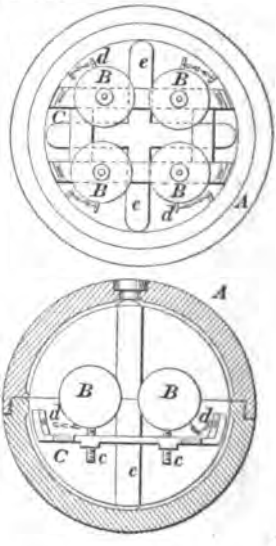

42819

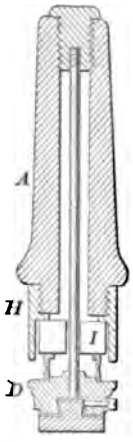

42820

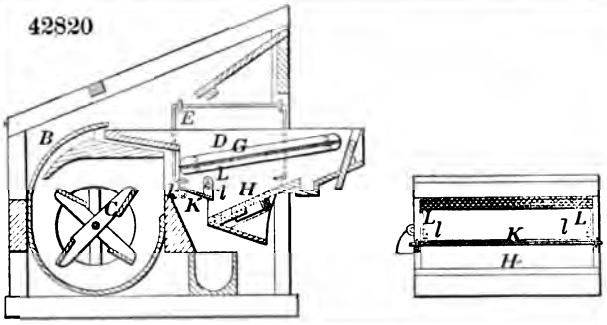

42821

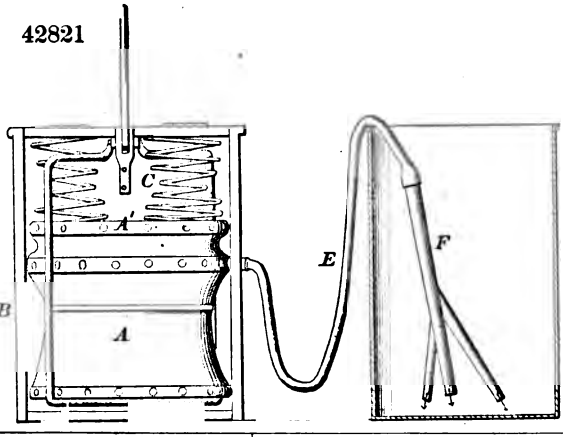

42822

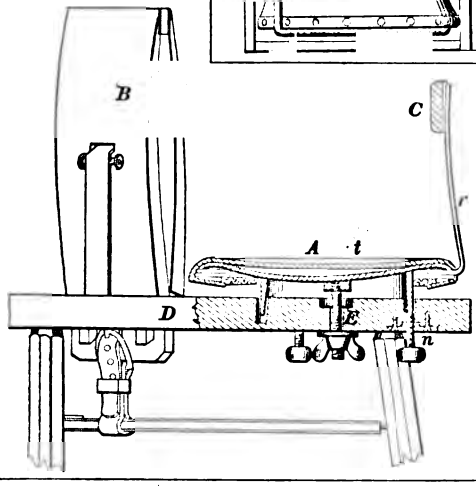

42823

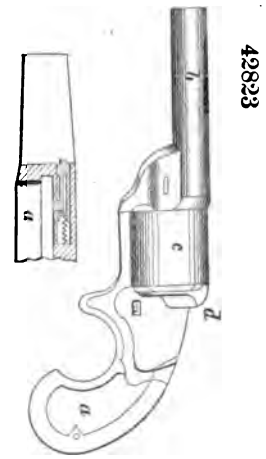

42825

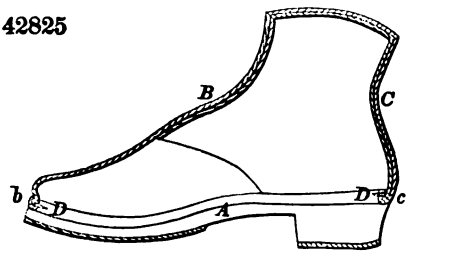

42824

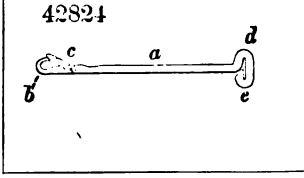

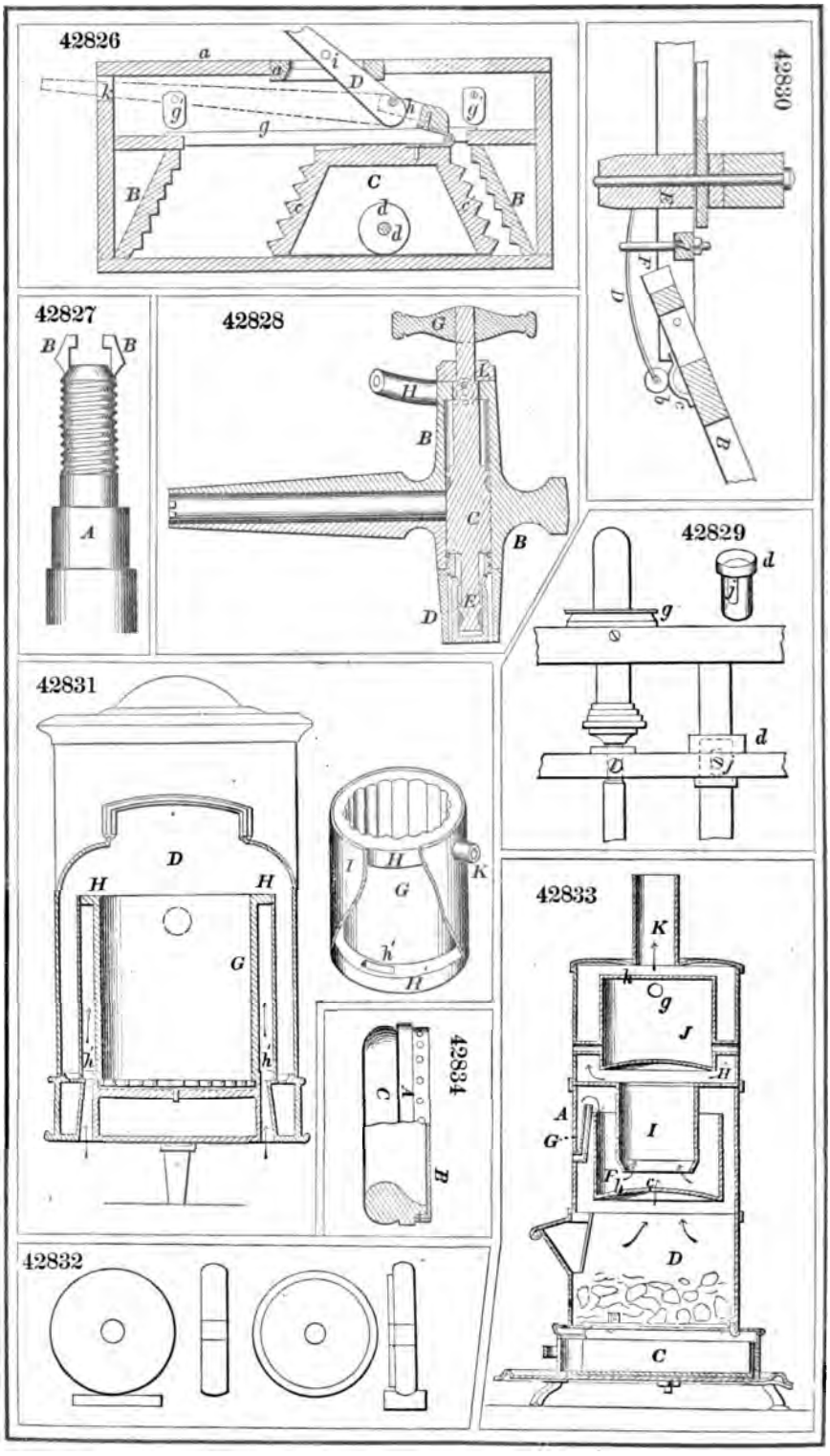
42826
42830
42827
42828
42829
42831
42833
42834
42832

42835

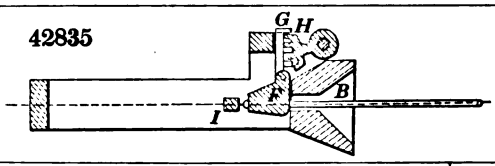

42838

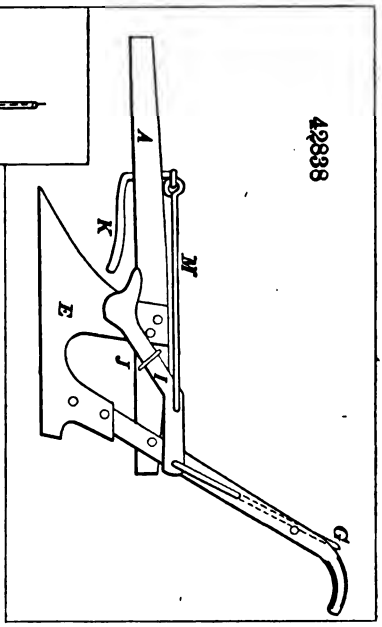

42836

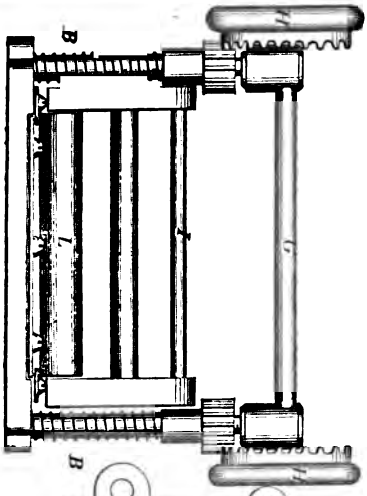

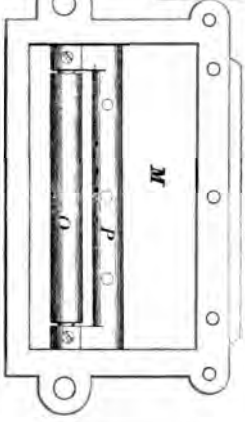

42837

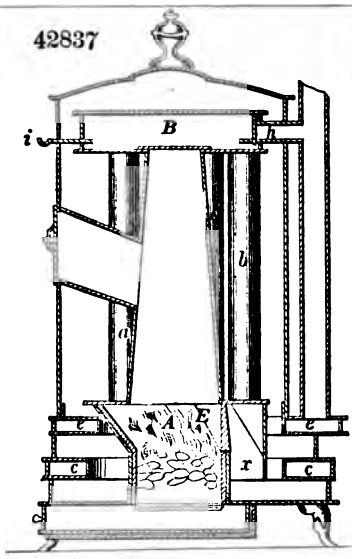

42839

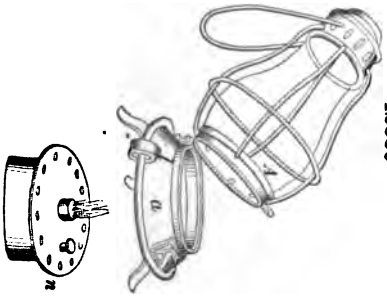

42840

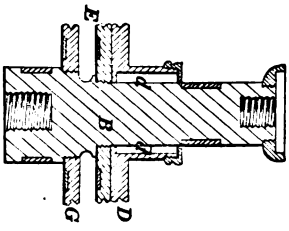

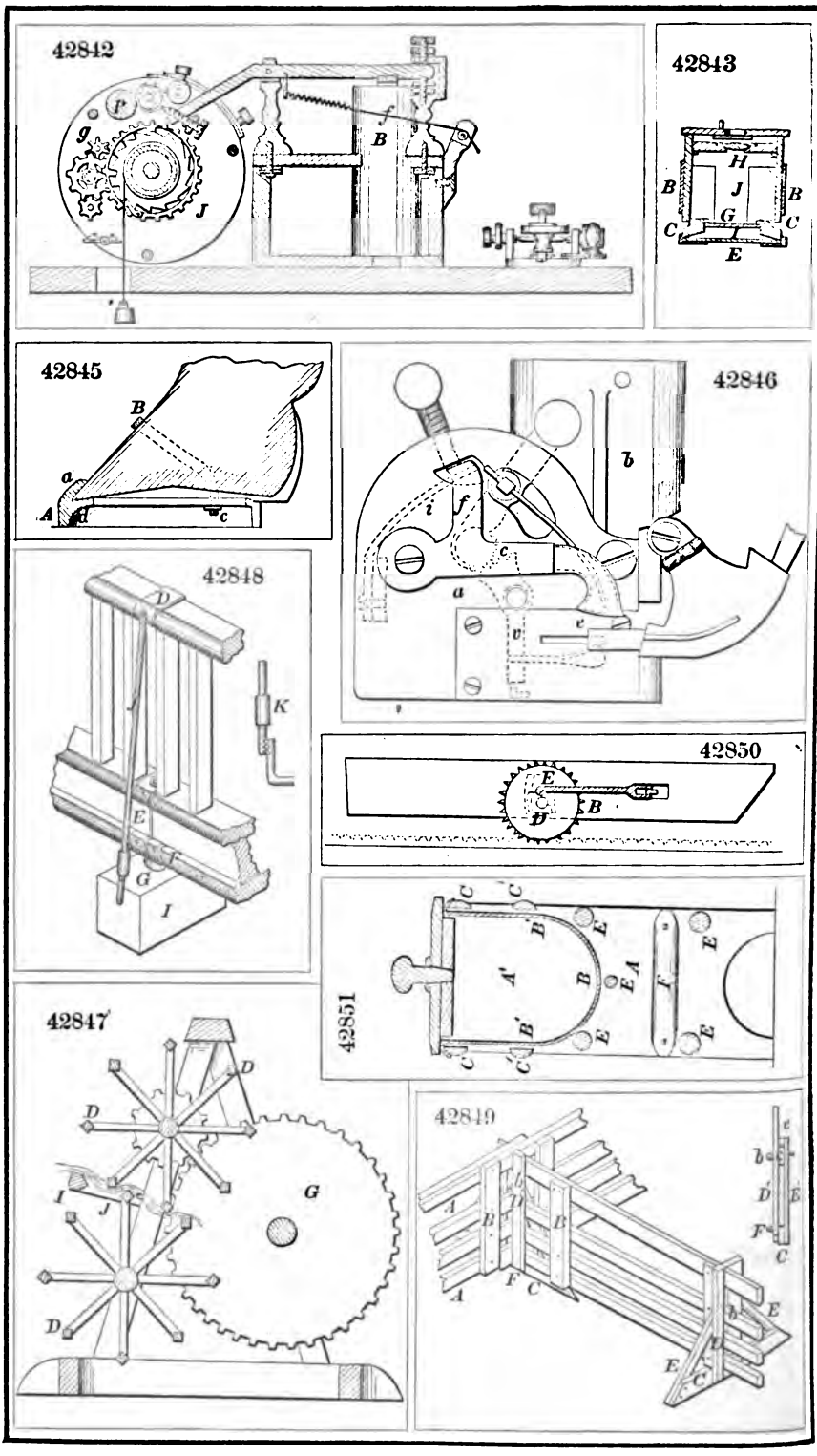
42842
42843
42845
42846
42848
42850
42851
42847
42849

42852

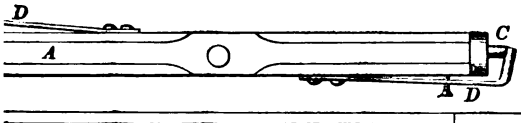

42853

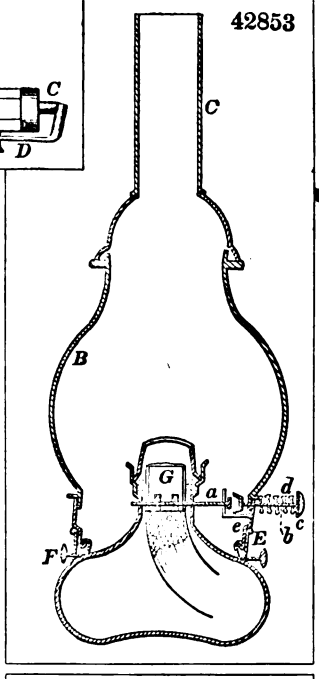

854

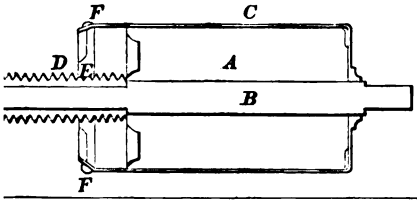

855

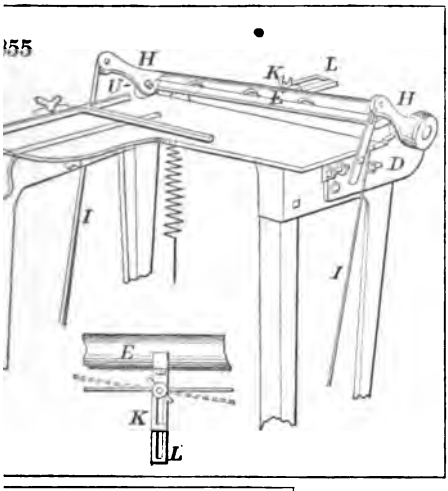

42857

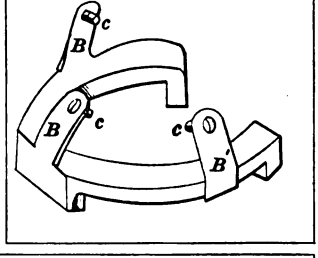

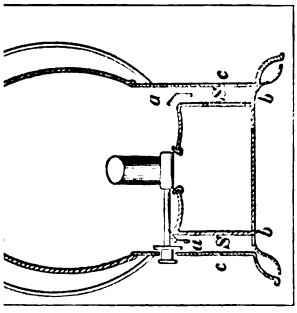

42859

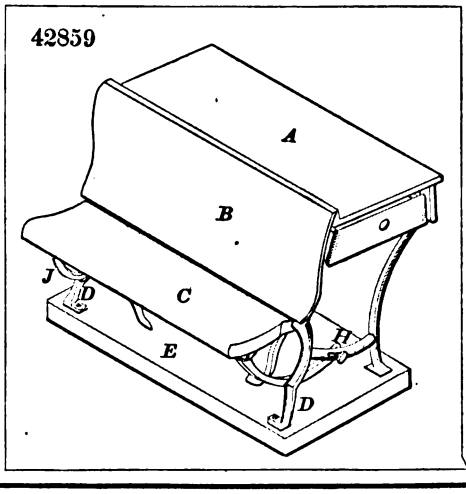

58

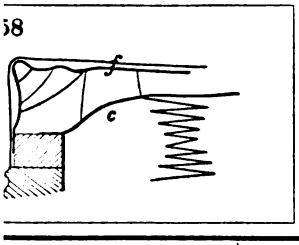

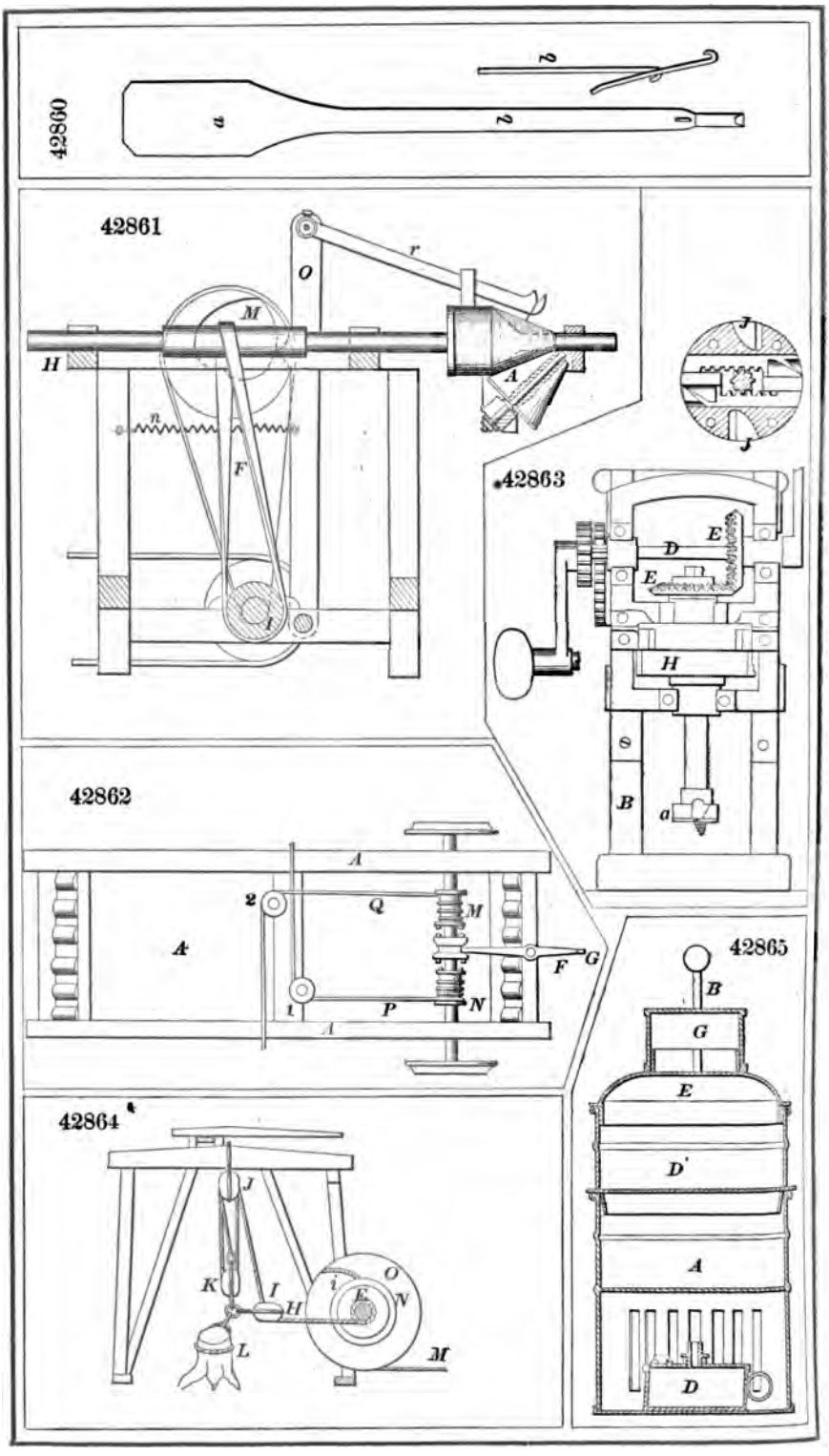
42860
42861
42862
42863
42864
42865

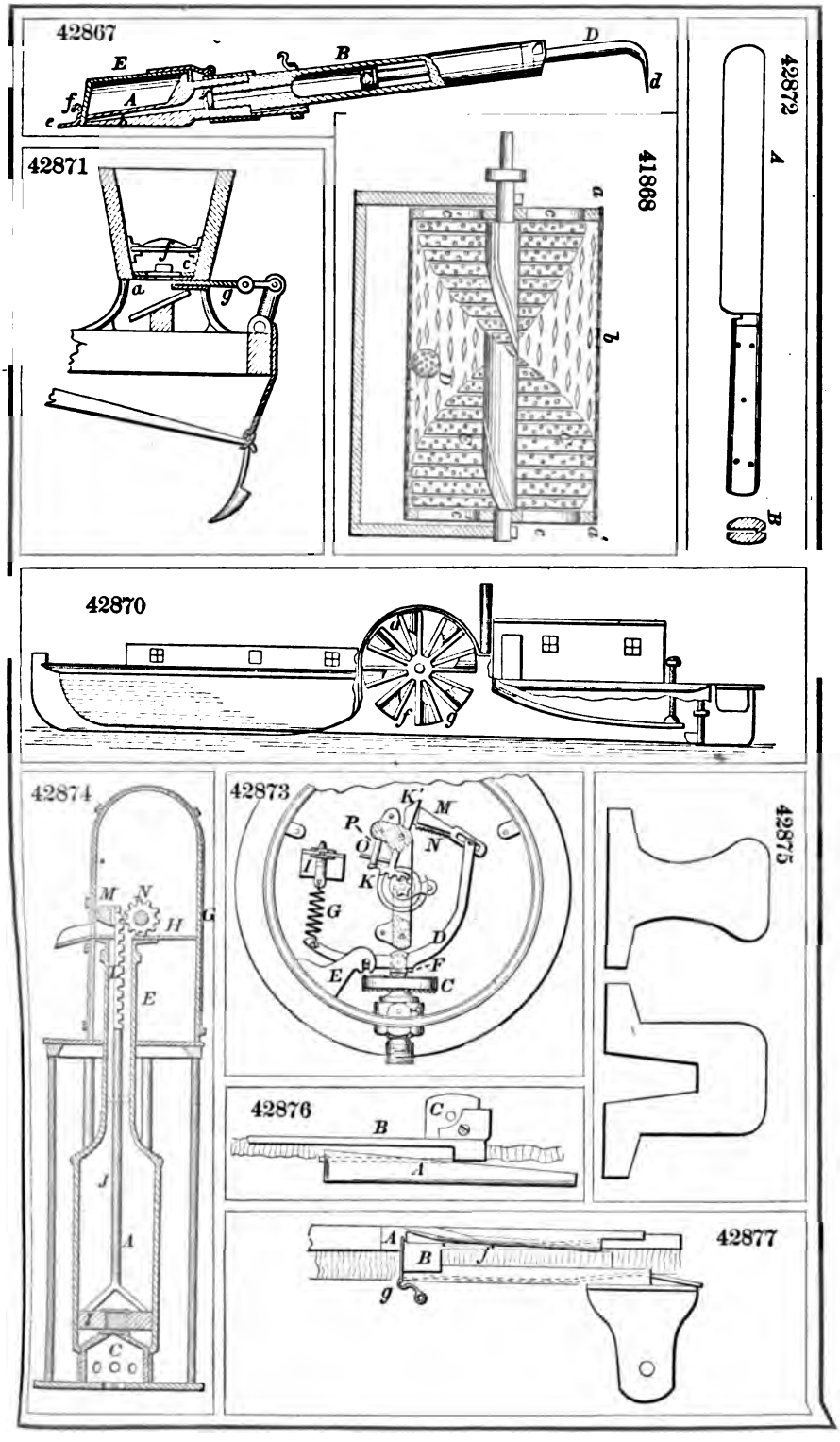
42867
E
B
D
d
f
A
c
42871
f
c
a
g
41868
a
b
42872
A
B
42870
f
g
42874
M
N
H
G
E
J
A
I
C
42873
K
M
P
O
N
L
K
G
D
E
F
C
42875
42876
C
B
A
42877
A
B
f
g

42878

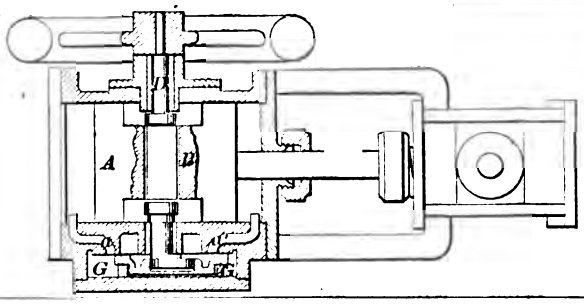

42879

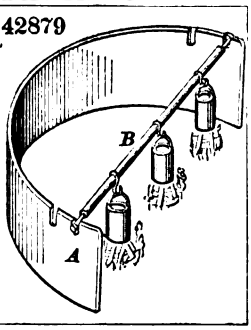

42884

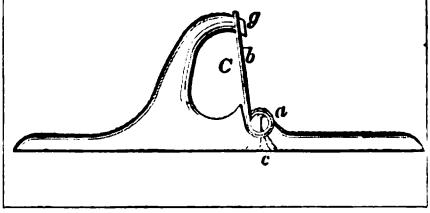

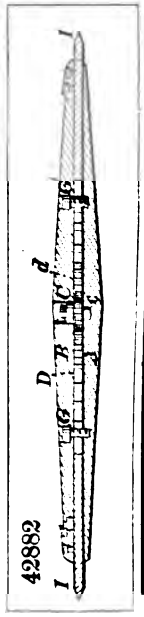

42882

42880

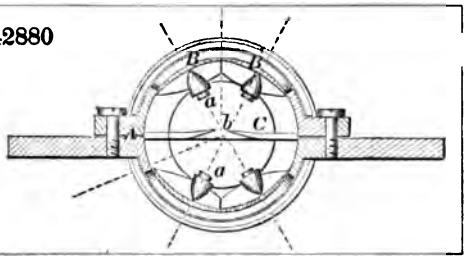

42883

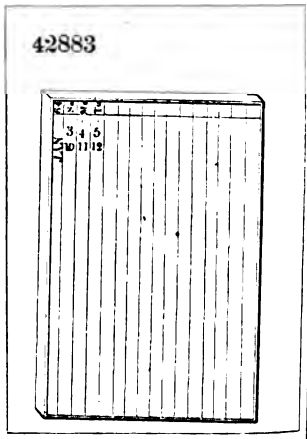

42881

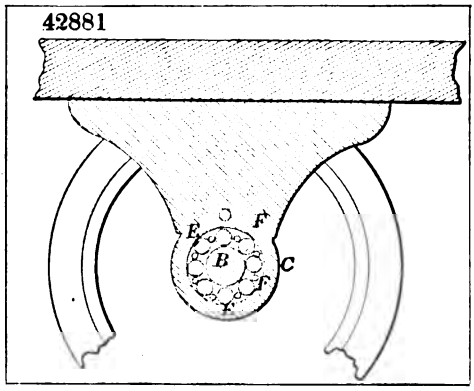

42886

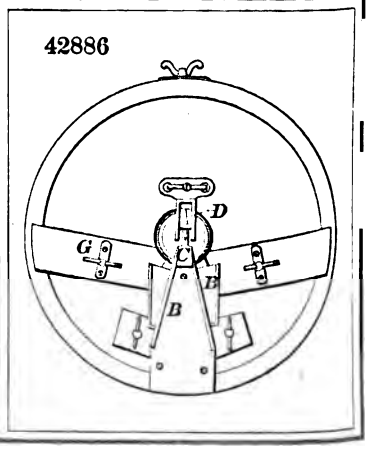

42885

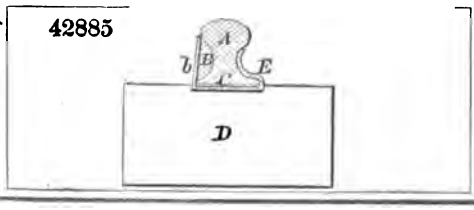

42887

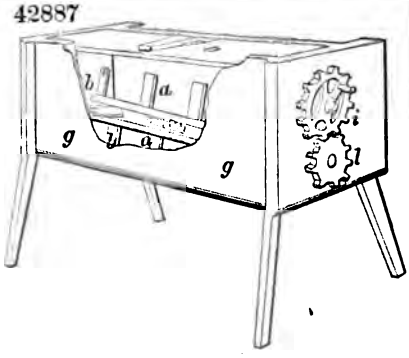

42891

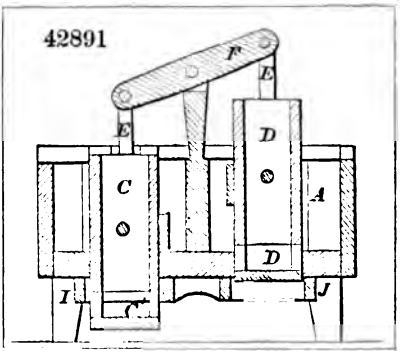

42888

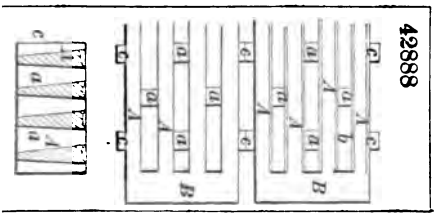

42892

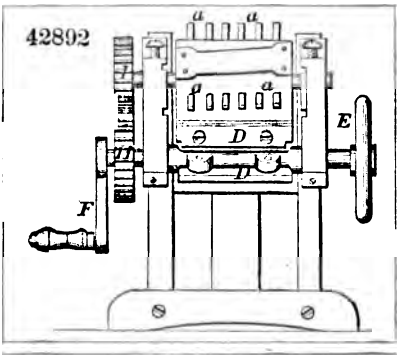

42893

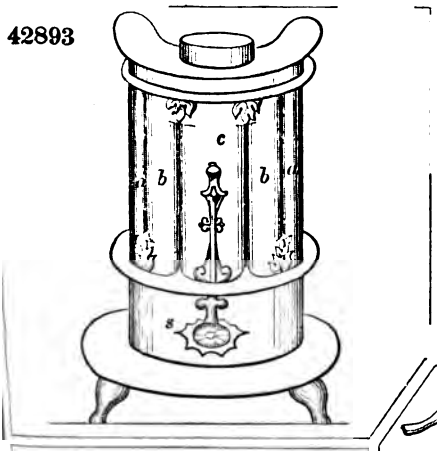

42889

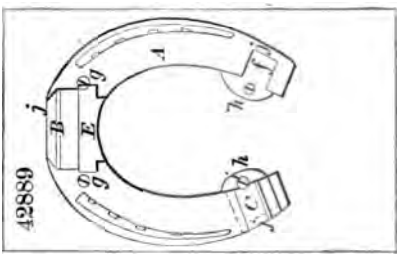

42894

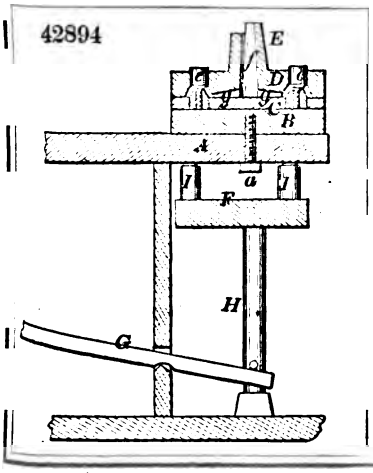

42895

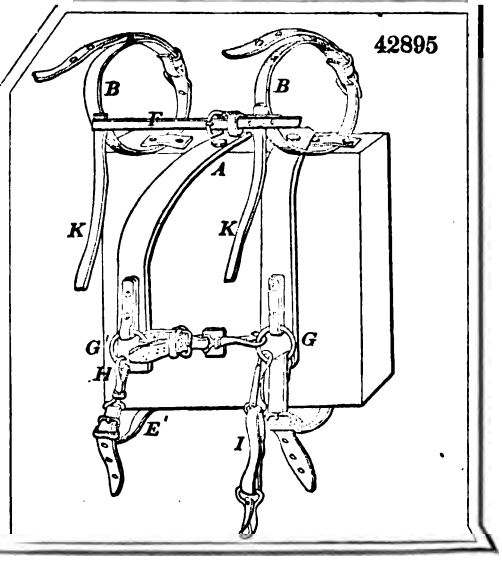

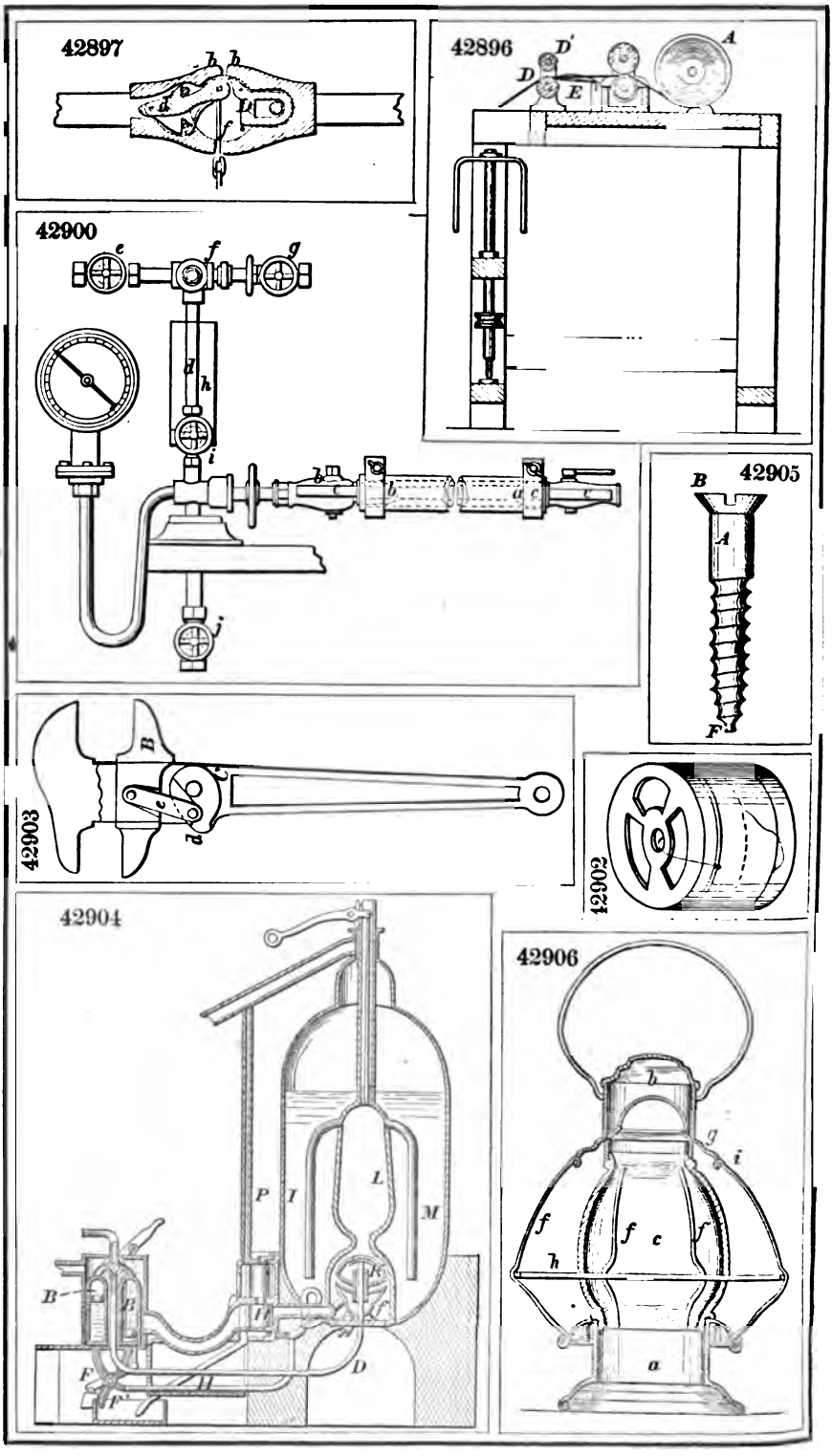
42897
42896
42900
42905
42903
42902
42904
42906

42907

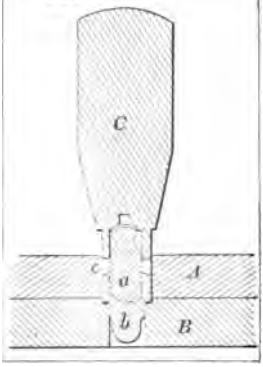

41914

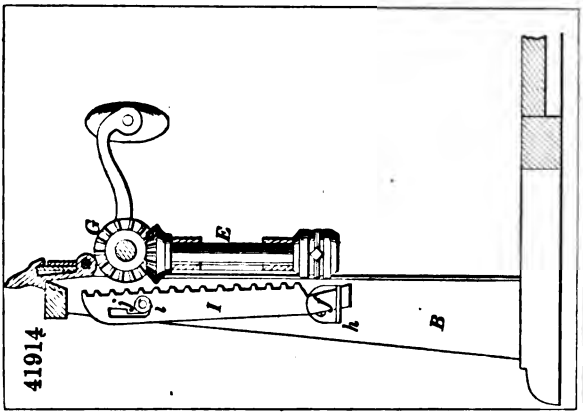

42908

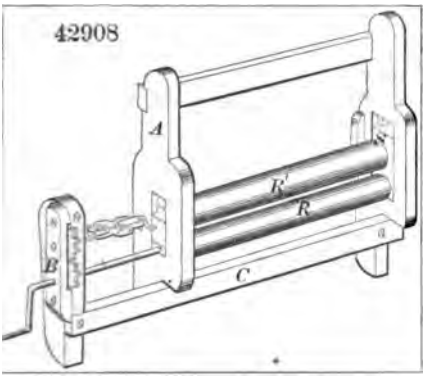

42911

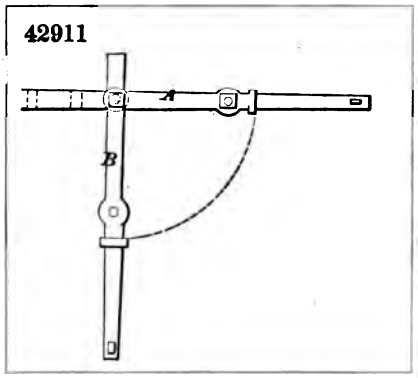

42909

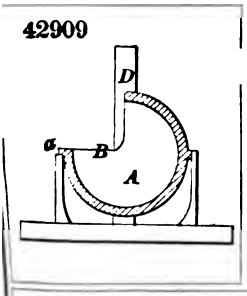

42915

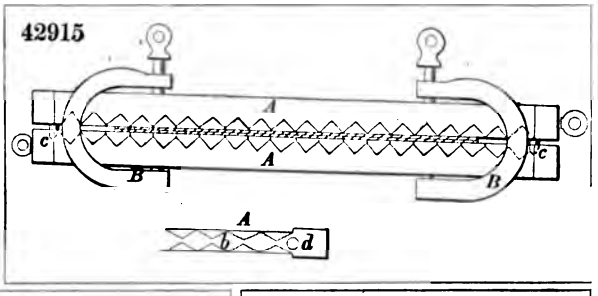

42912

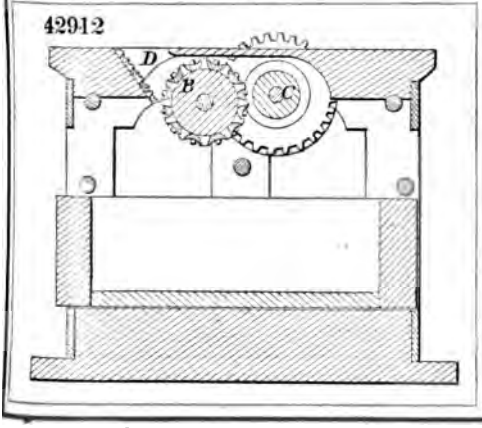

42916

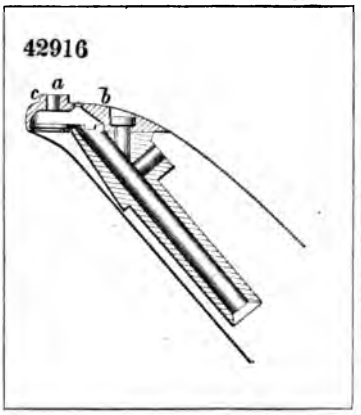

42917

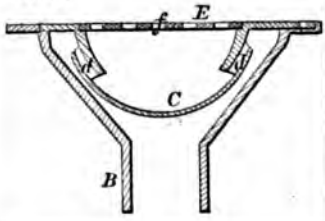

42919

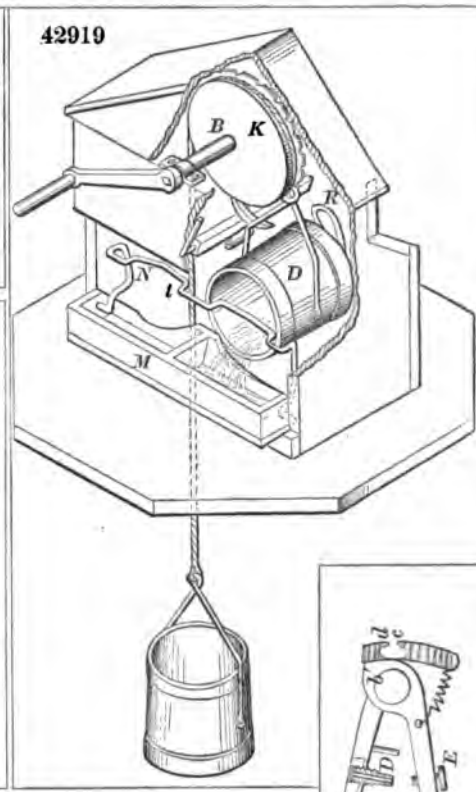

42920

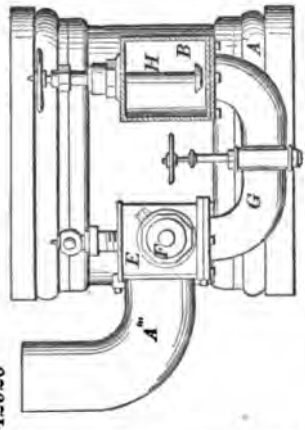

42918

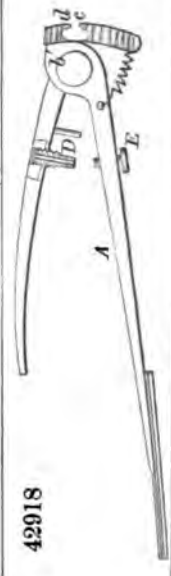

42921

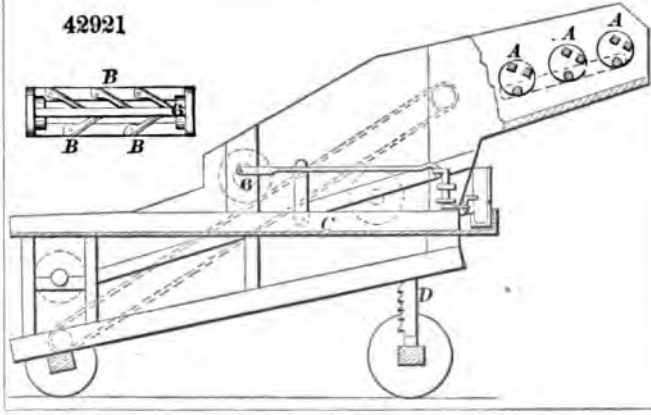

42924

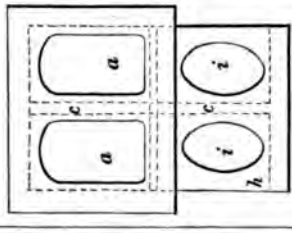

42923

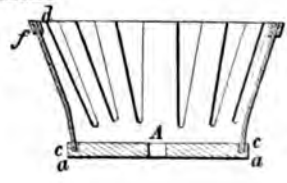

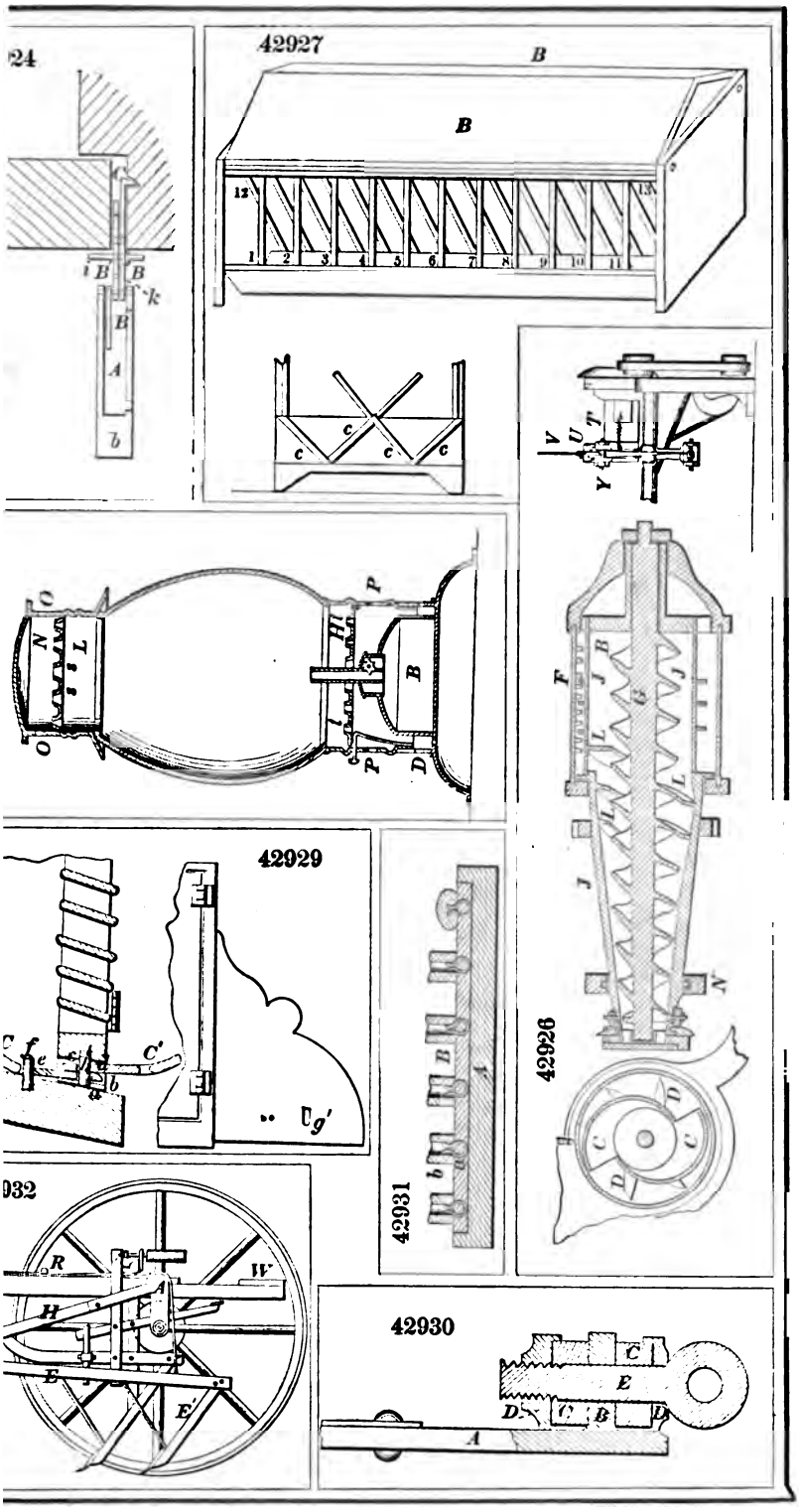
24
42927
42929
42926
42931
932
42930

42933

42936

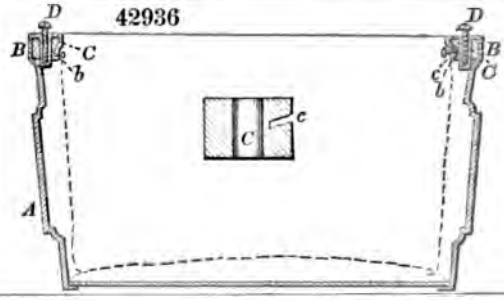

42934

42938

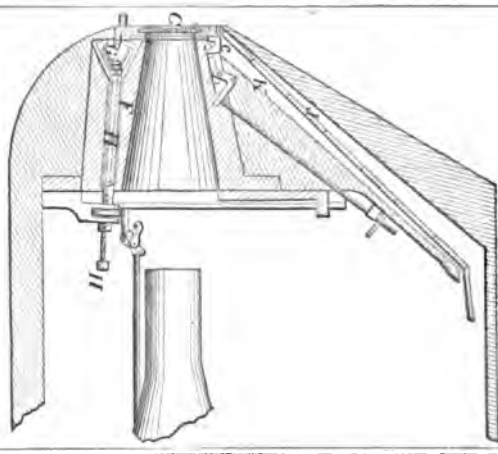

42935

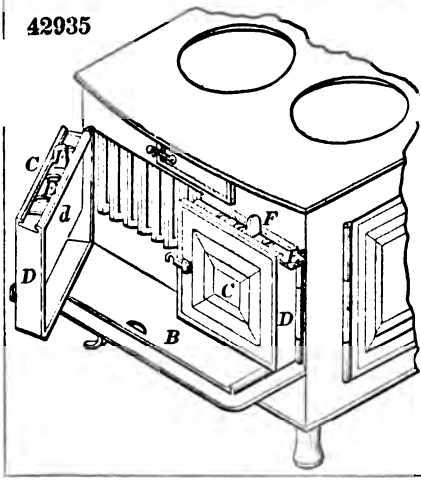

42939

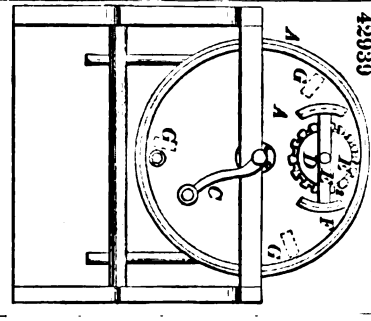

42940

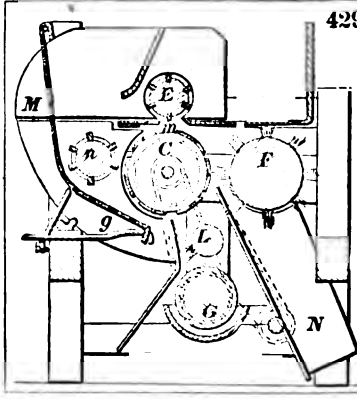

42937

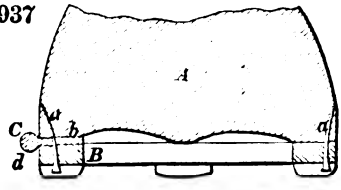

42941

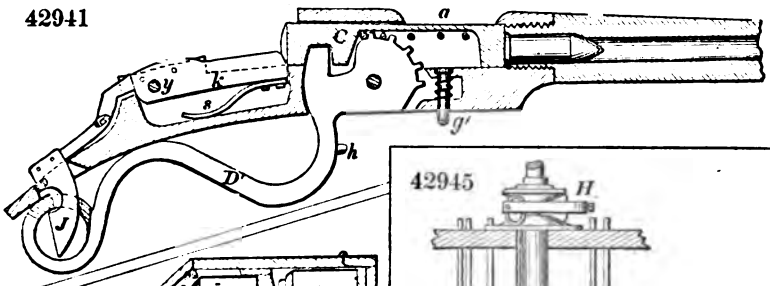

42943

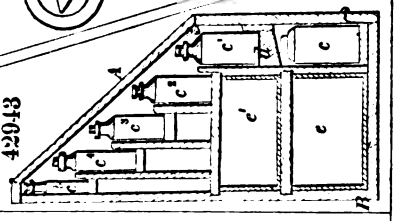

42945

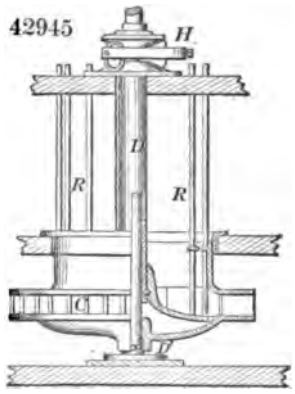

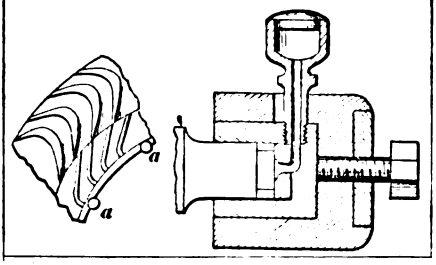

42944

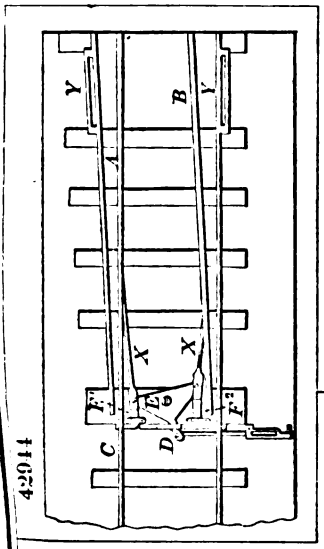

42946

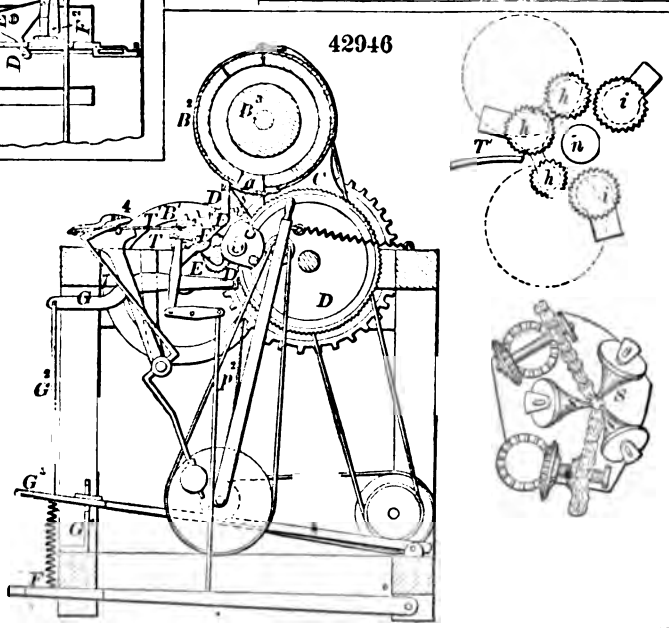

42947

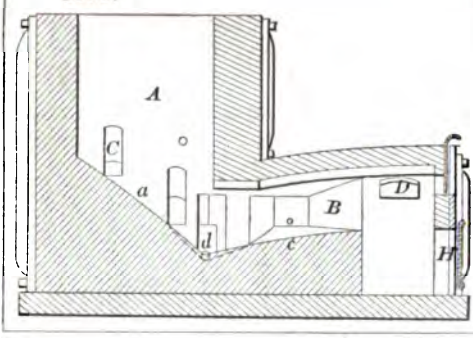

42948

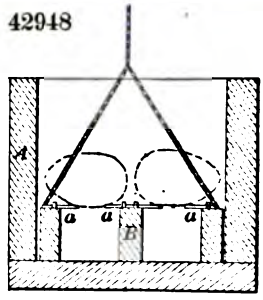

42949

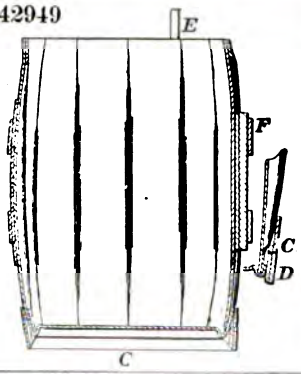

42955

42954

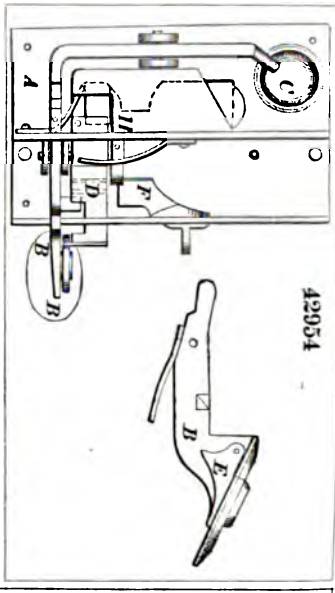

42950

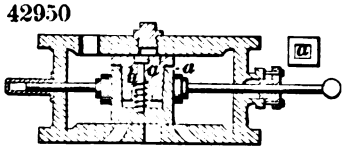

42951

42952

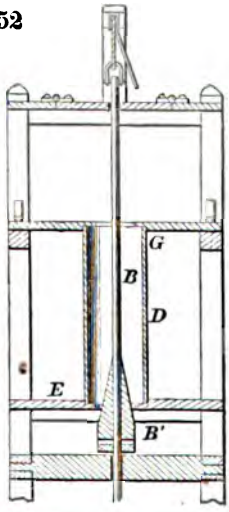

42956

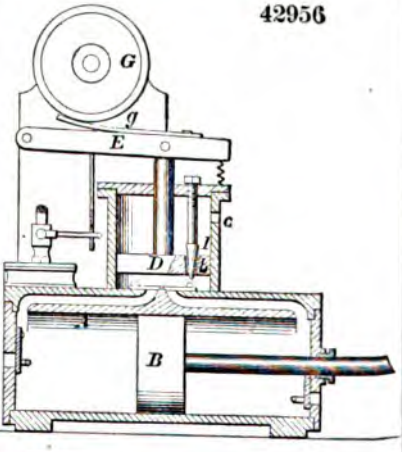

42957

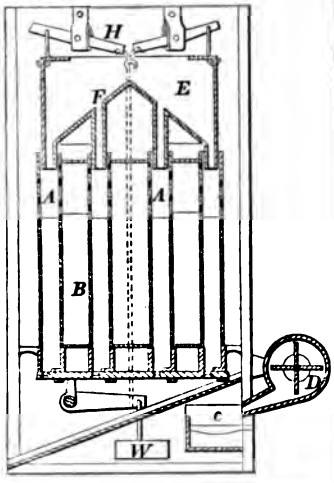

42960

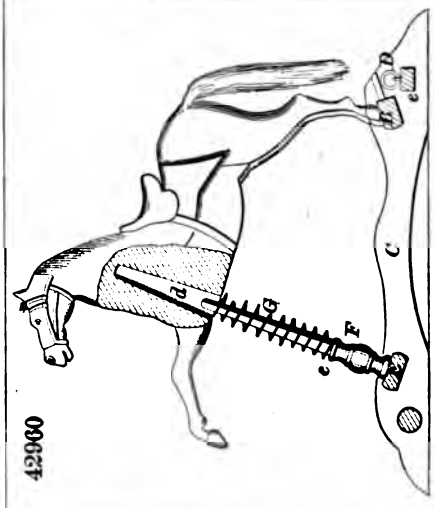

42962

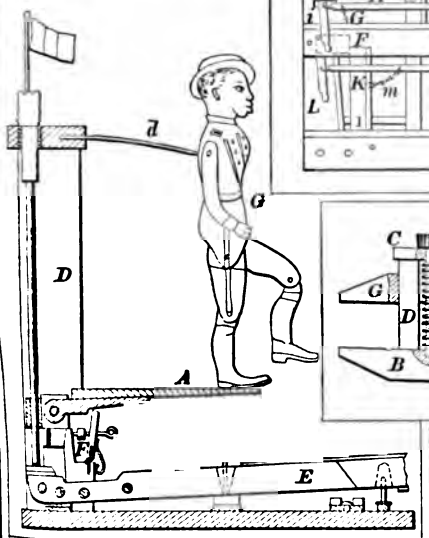

42963

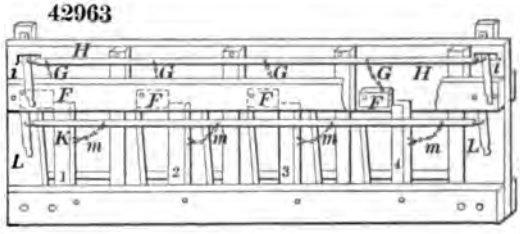

42961

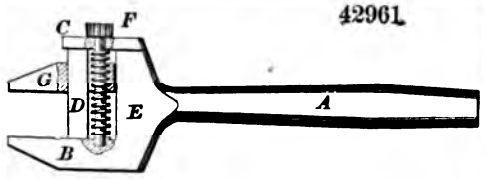

42958

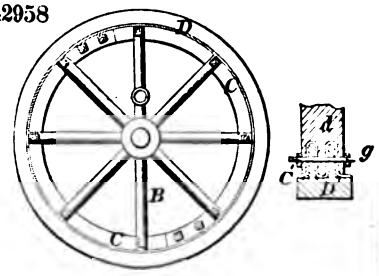

42964

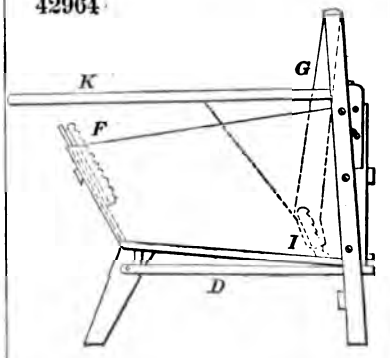

42965

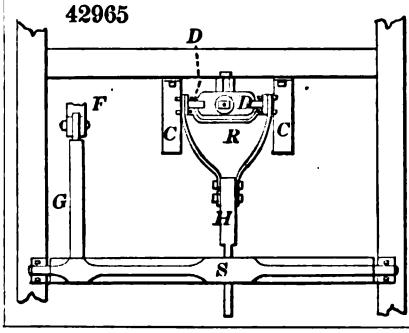

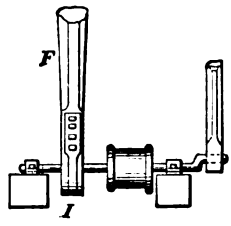

42966

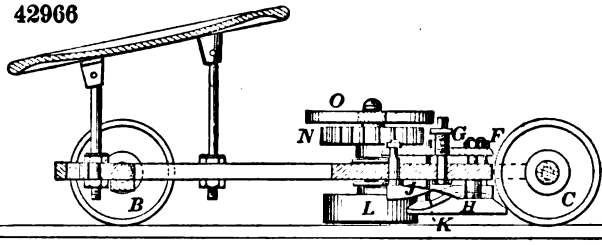

42968

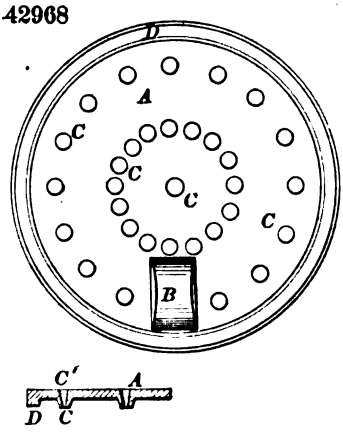

42907

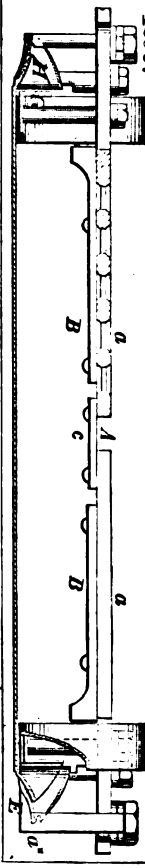

42909

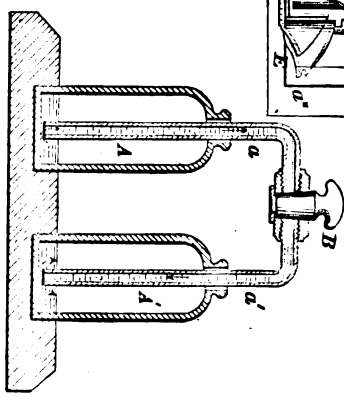

42970

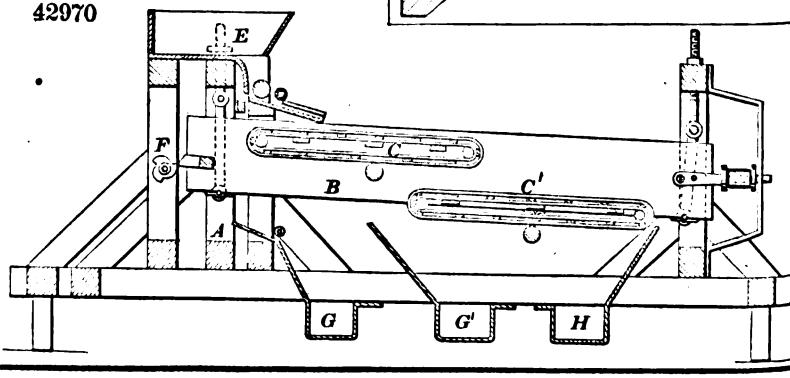

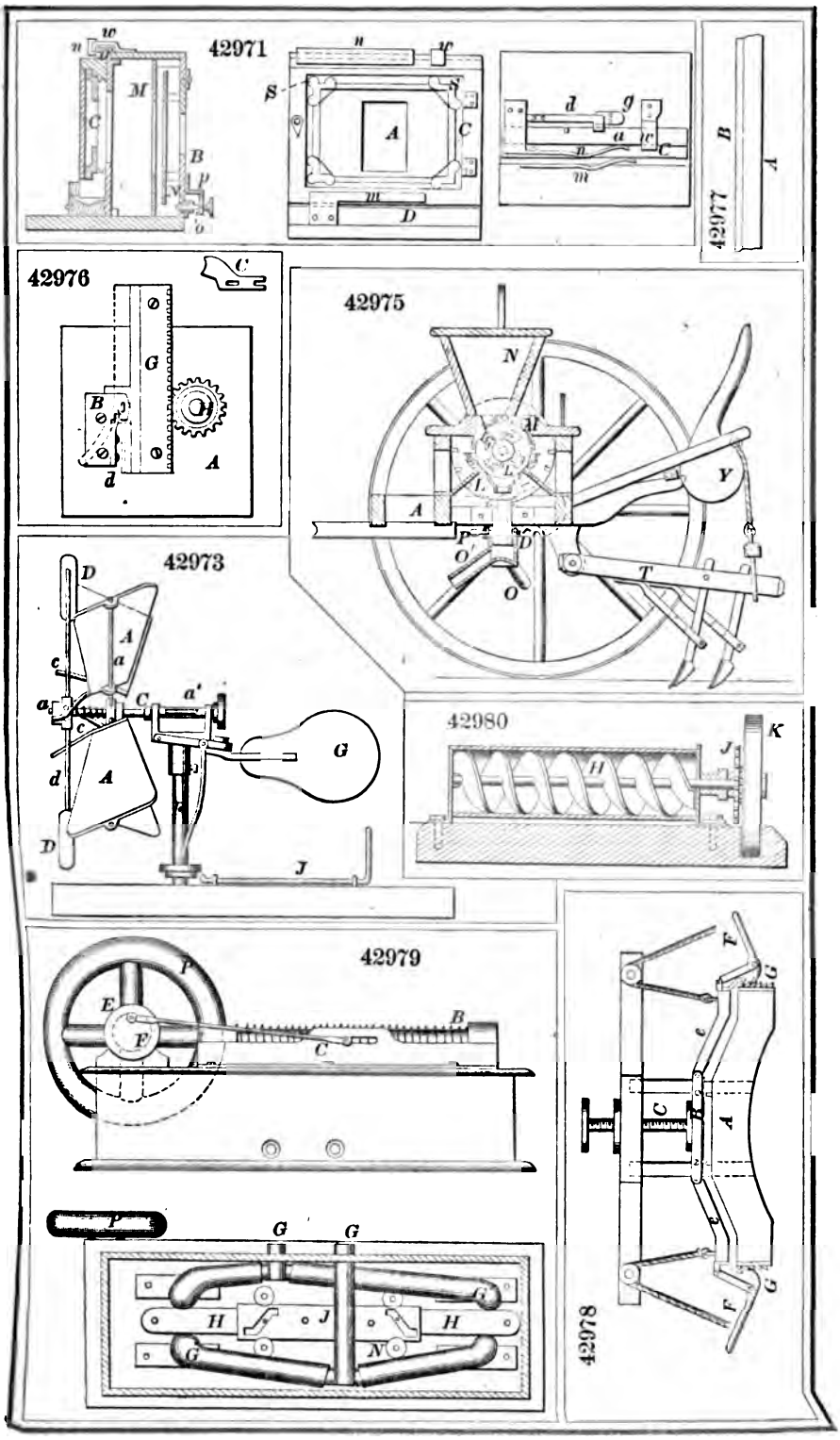
42971
42977
42976
42975
42973
42980
42979
42978

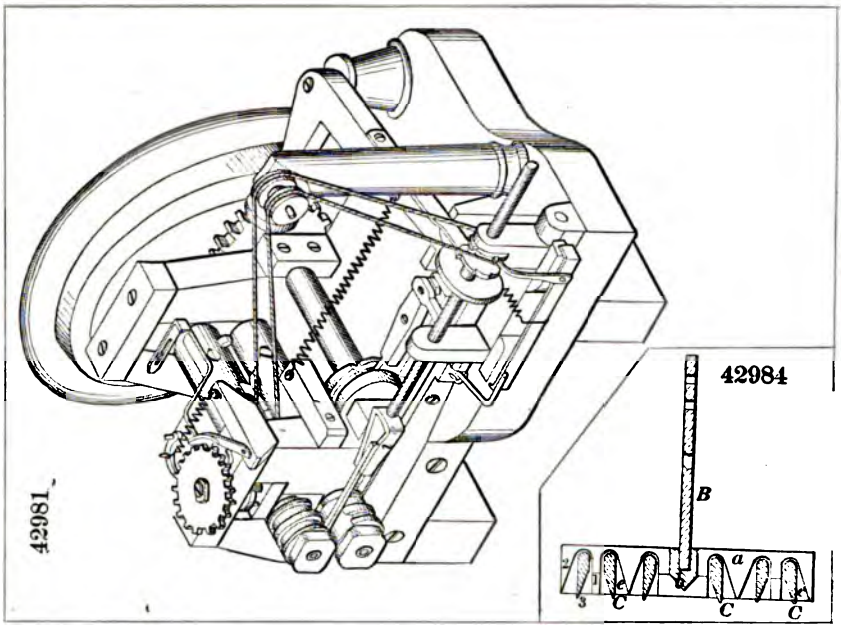
42981
42984
B
a
C
C
C

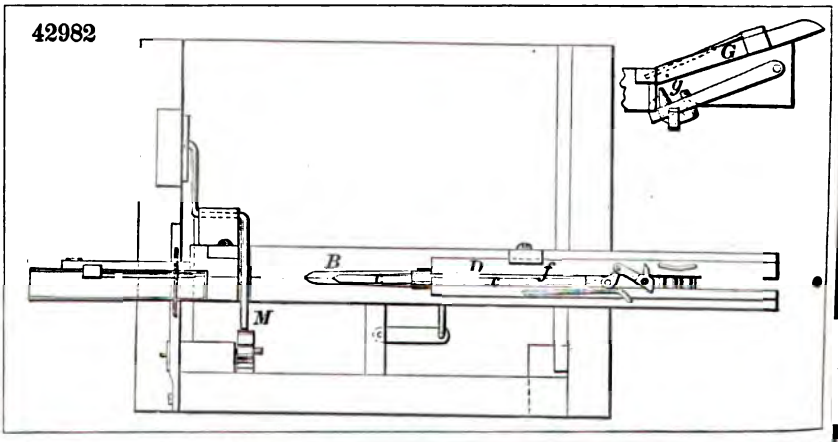
42982
G
B
D
M

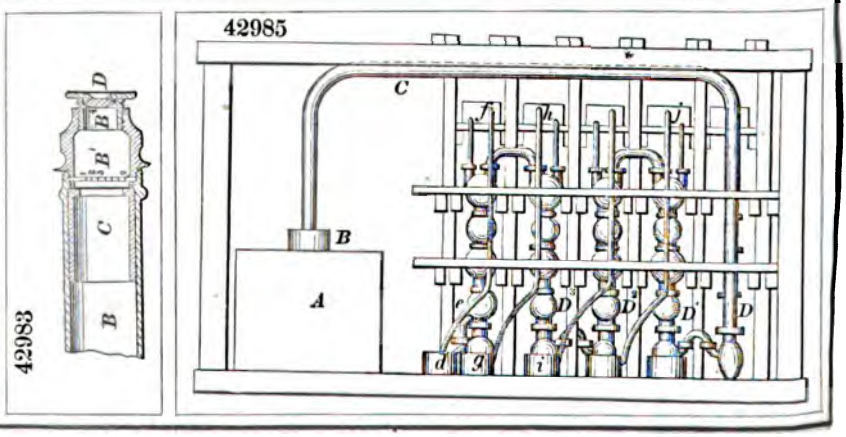
42983
D
B
B'
C
B
42985
C
B
A
f
h
D
D'
D'
D
d
g
i

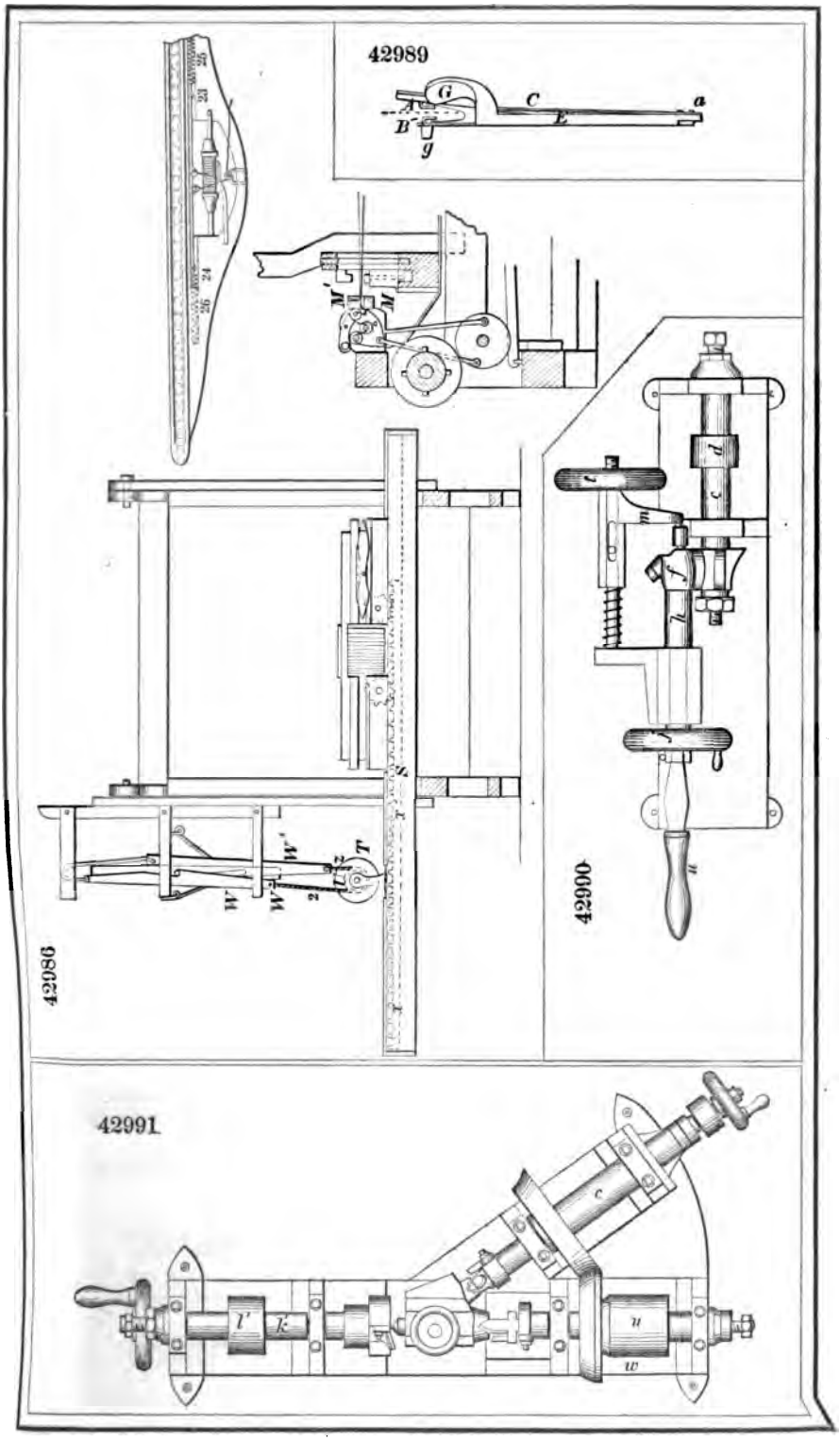
42989
42986
42990
42991

42992

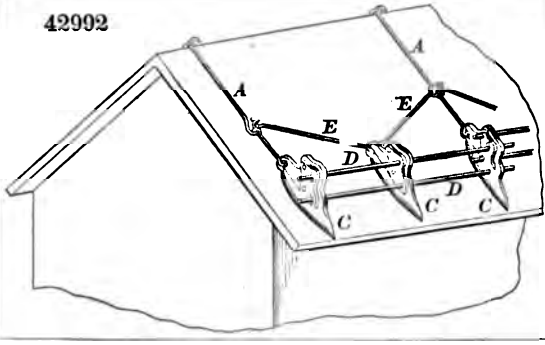

42995

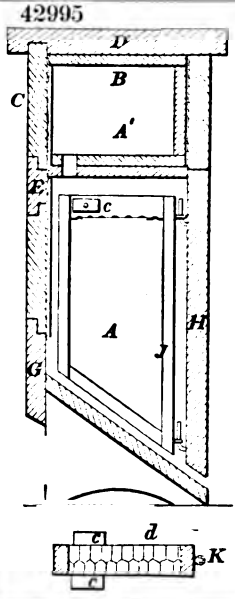

42994

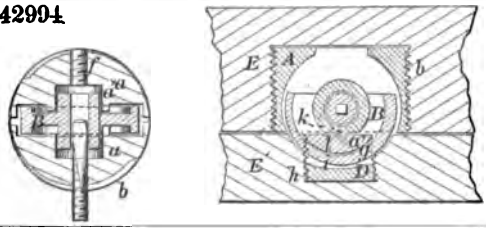

42993

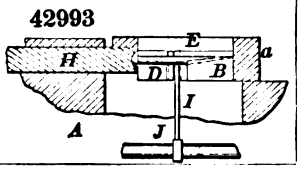

42996

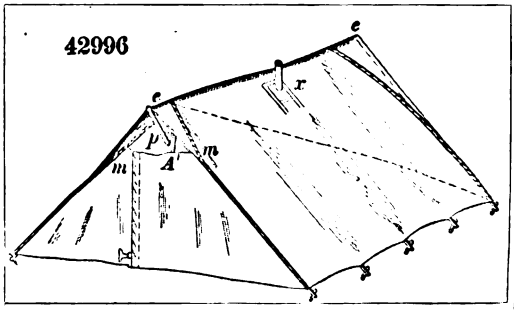

42998

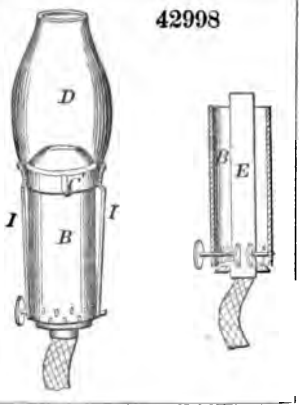

42997

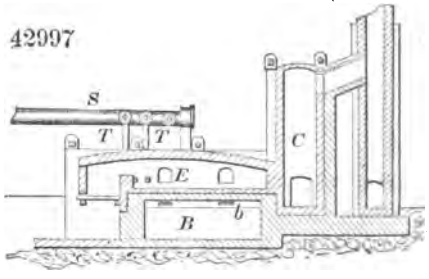

42999

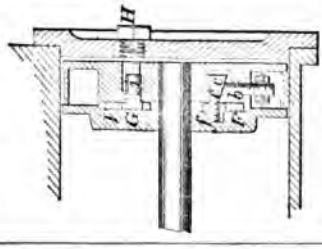

43000

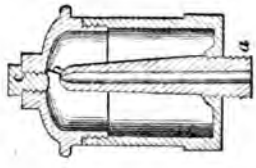

43001

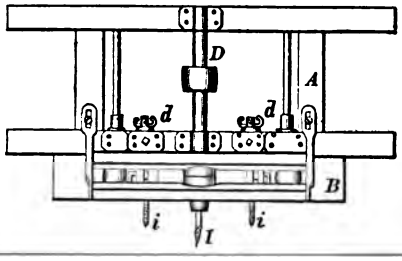

43006

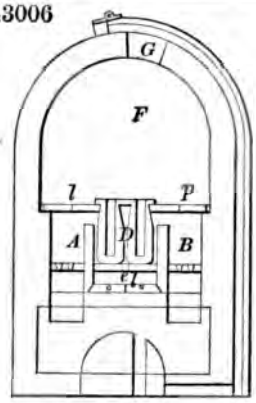

43003

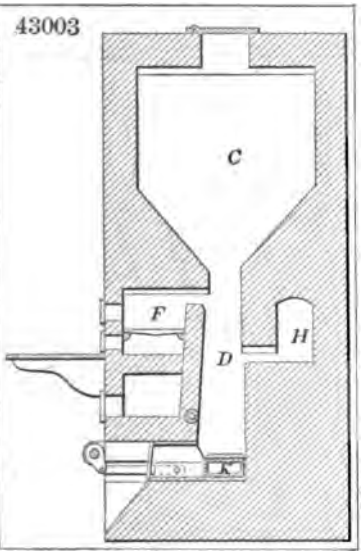

43002

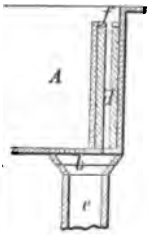

43004

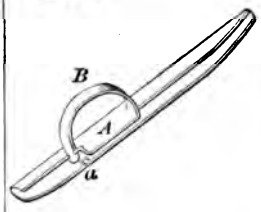

43005

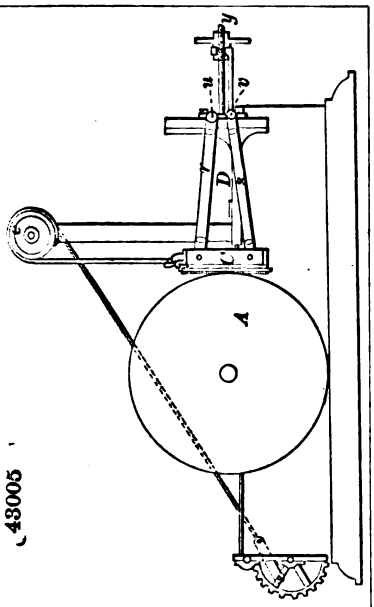

43007

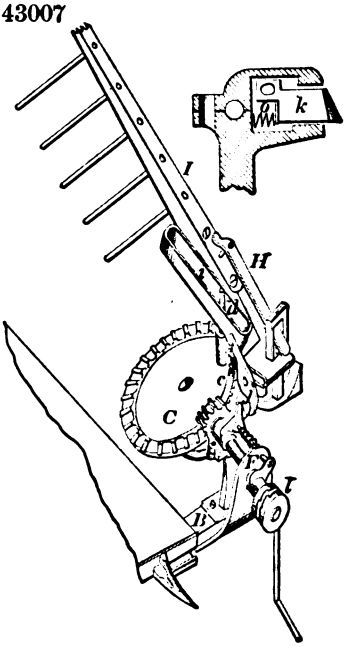

43008

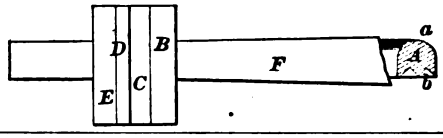

43009

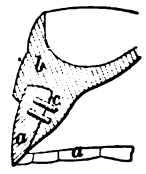

43010

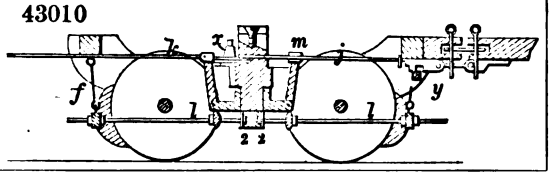

43012

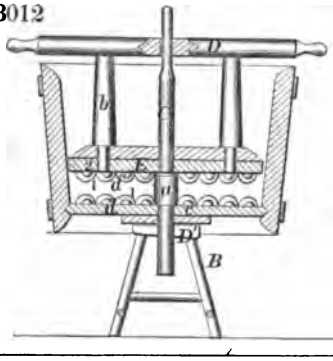

43014

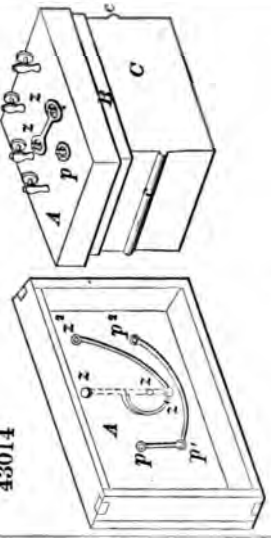

43013

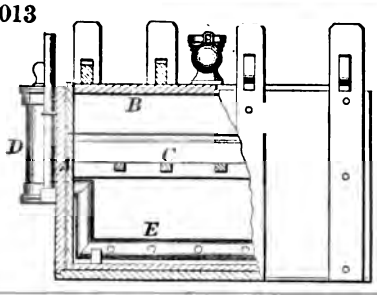

43015

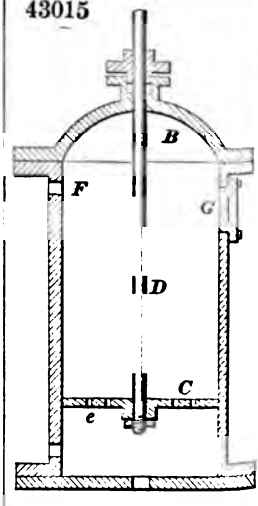

43011

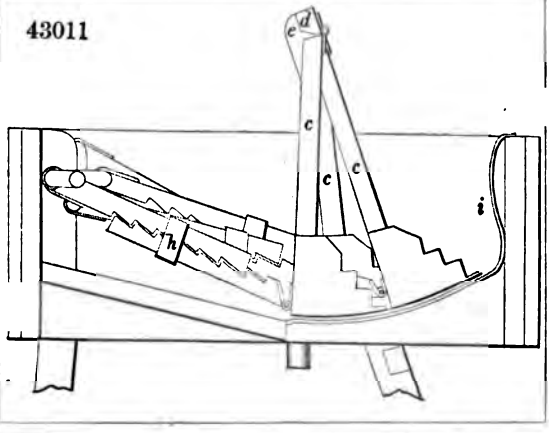

43016

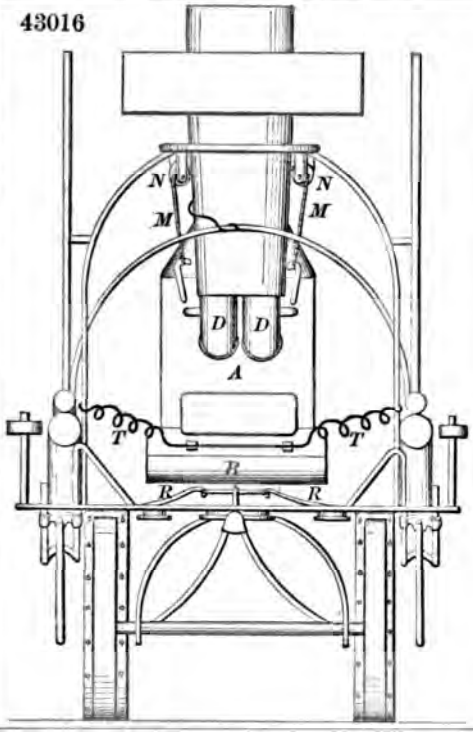

43017

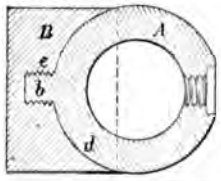

43018

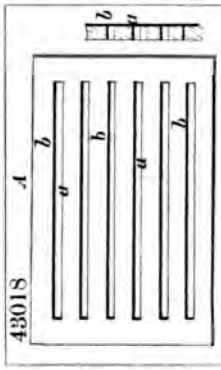

43019

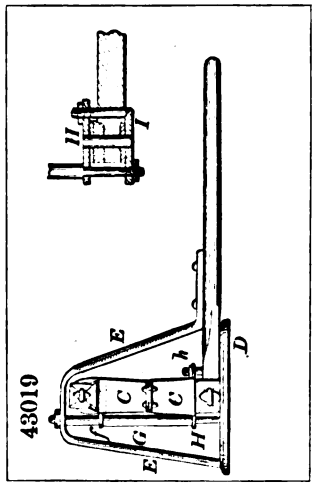

43020

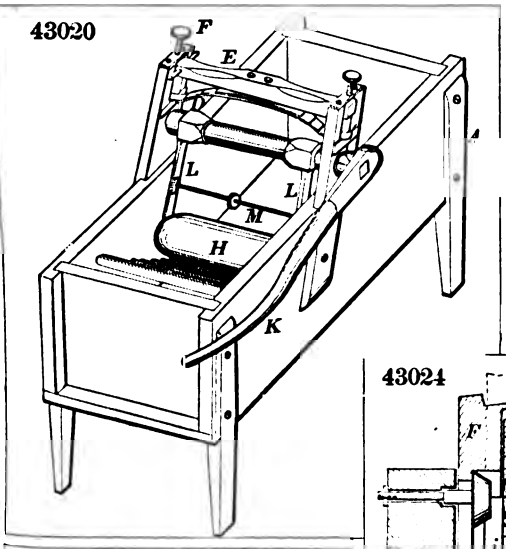

43023

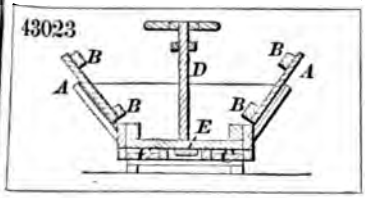

43024

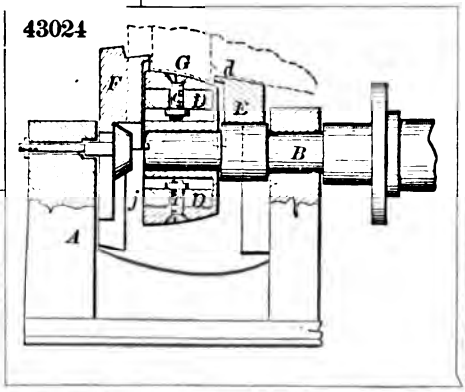

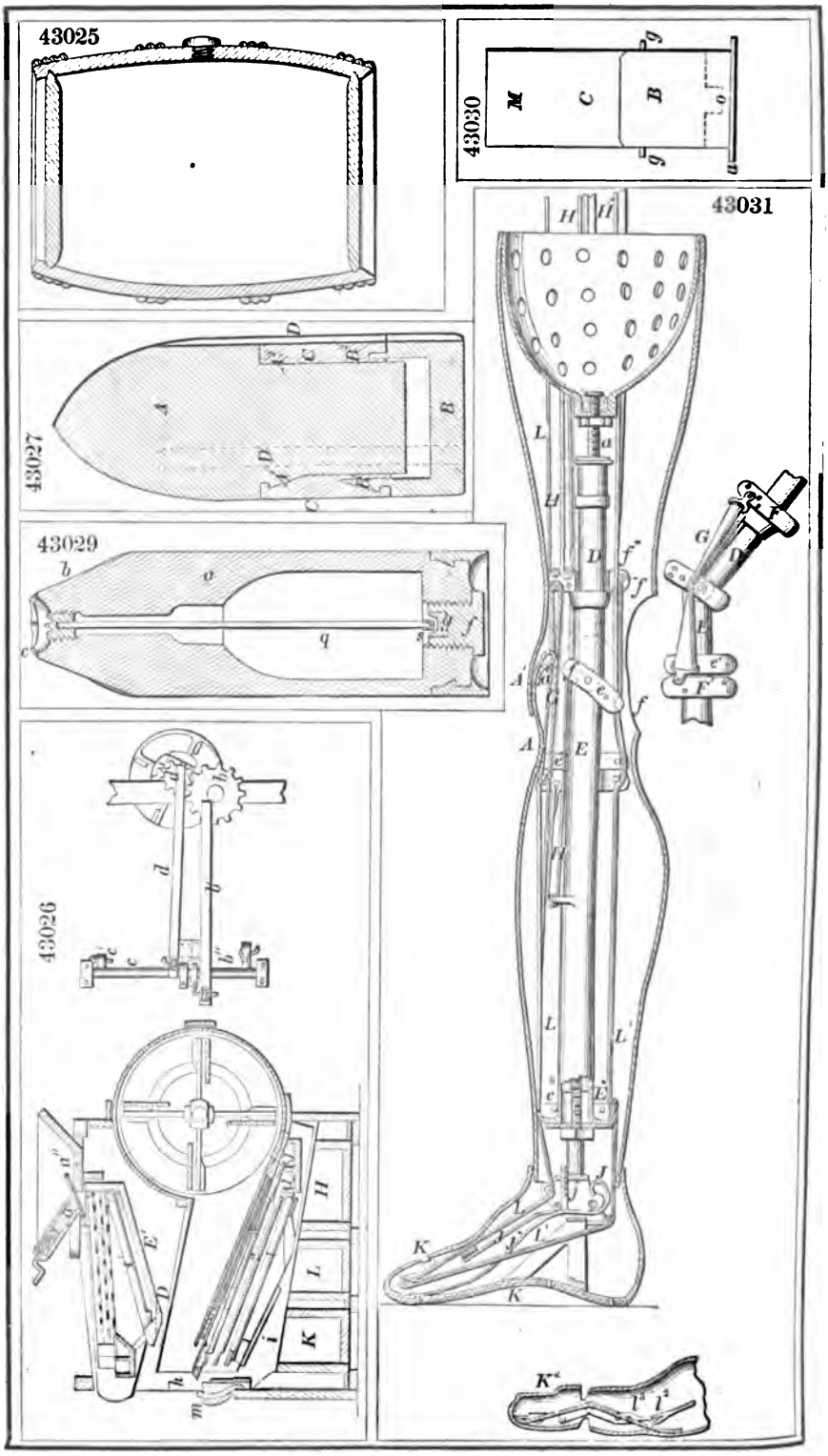
43025
43030
43031
43027
43029
43026

43032

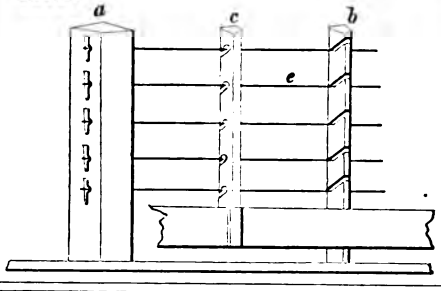

43036

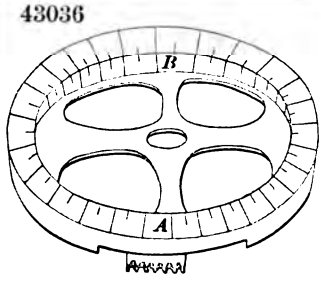

43035

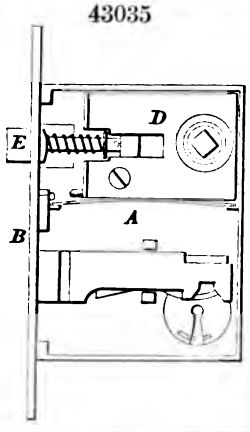

43040

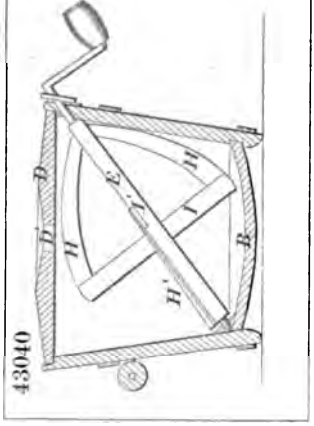

43038

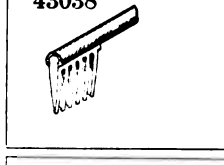

43037

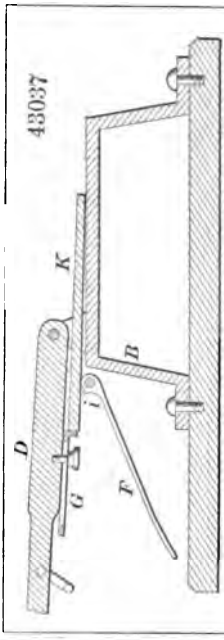

43039

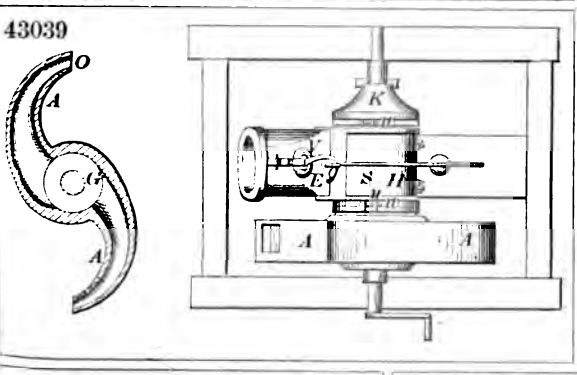

43033

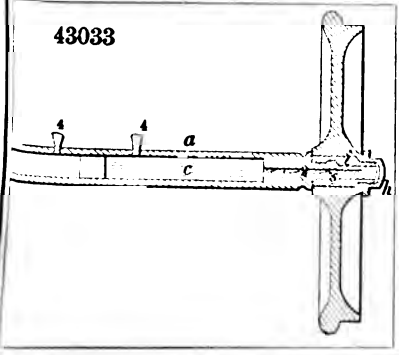

43041

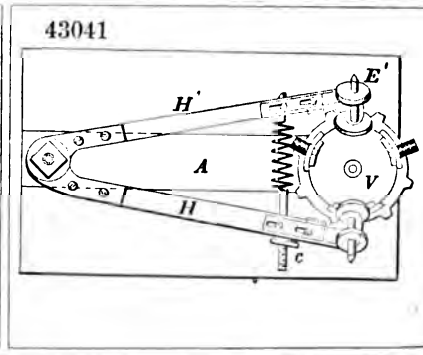

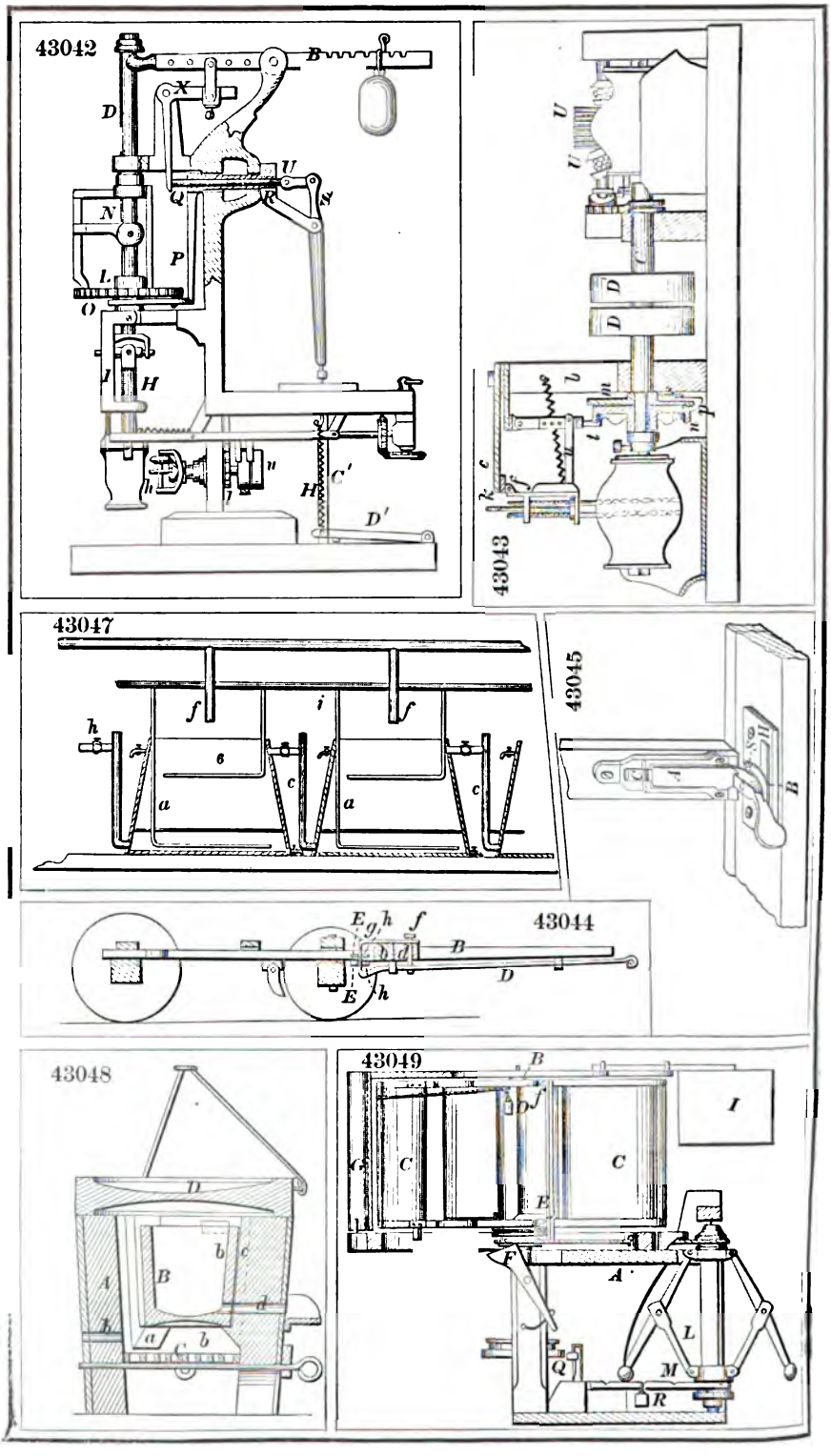
43042
43043
43044
43045
43047
43048
43049

43050

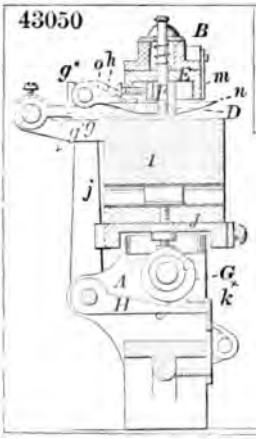

43052

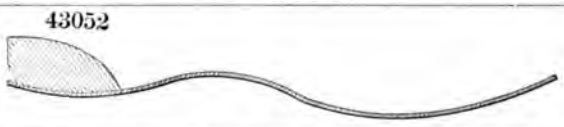

43054

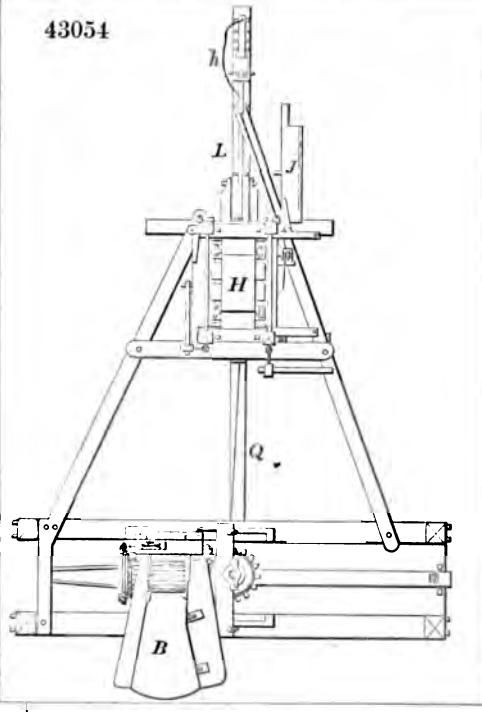

43051

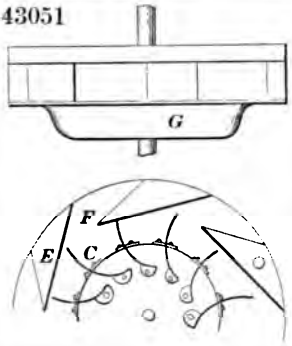

43053

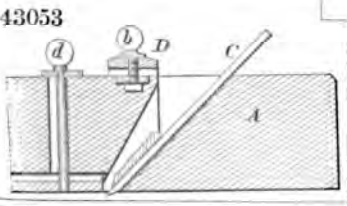

43055

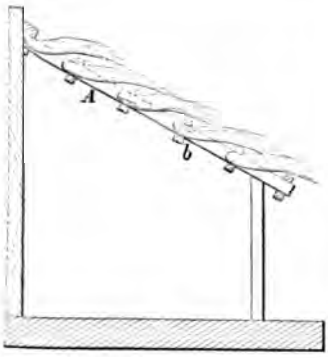

43056

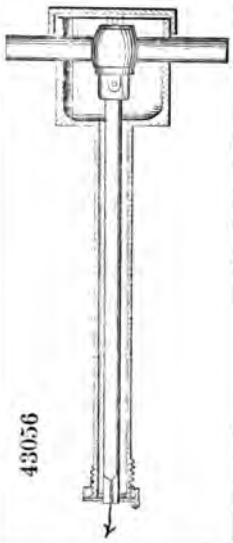

43057

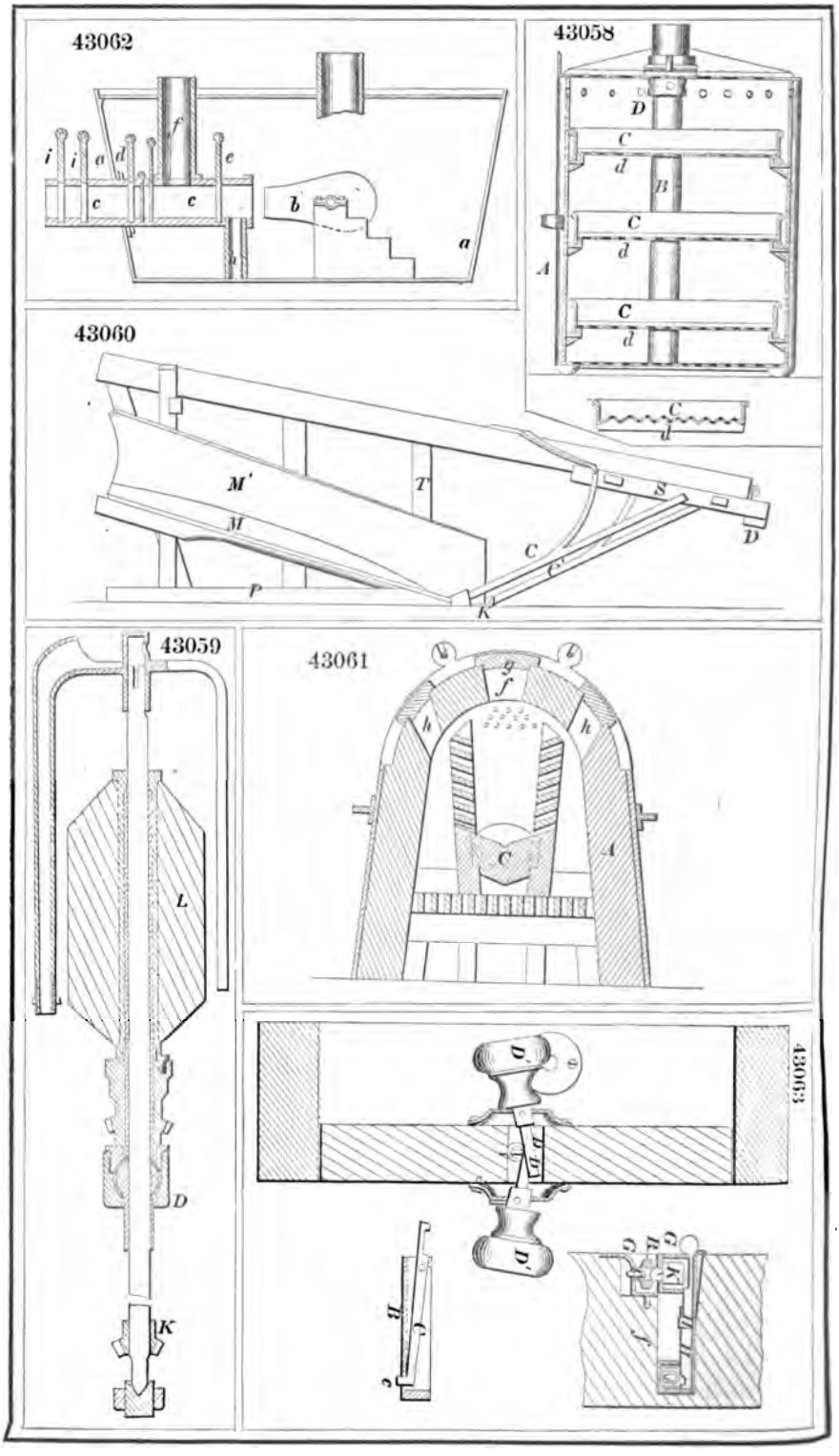
43062
43058
43060
43059
43061
43063

43064

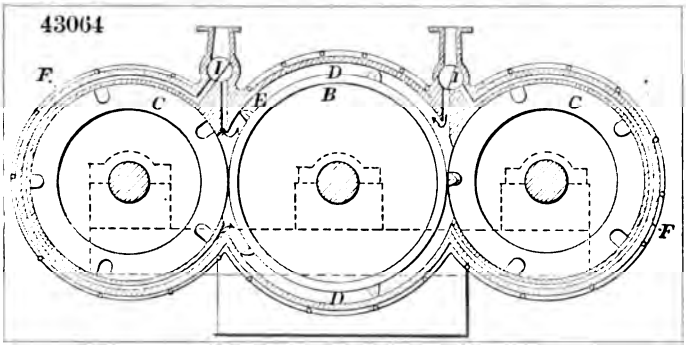

43065

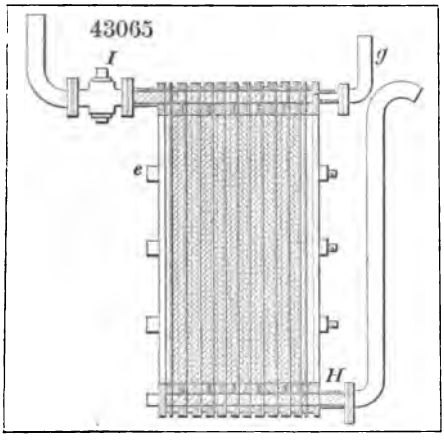

43067

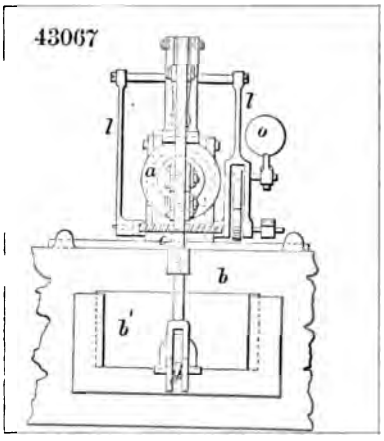

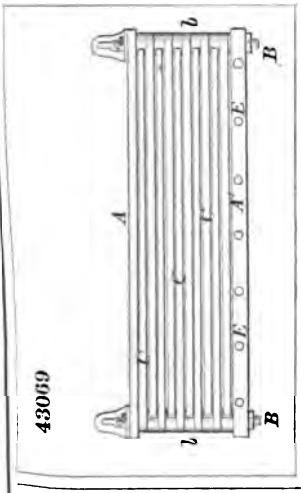

43071

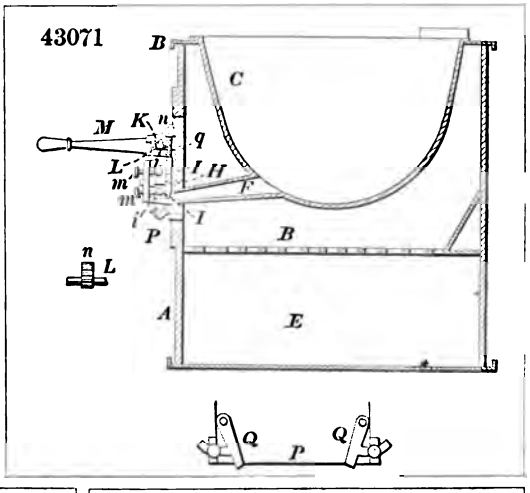

43070

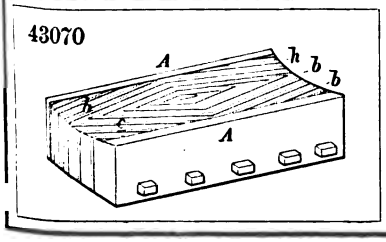

43072

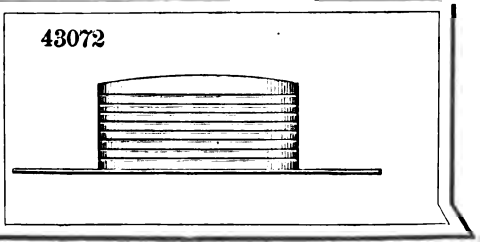

43073

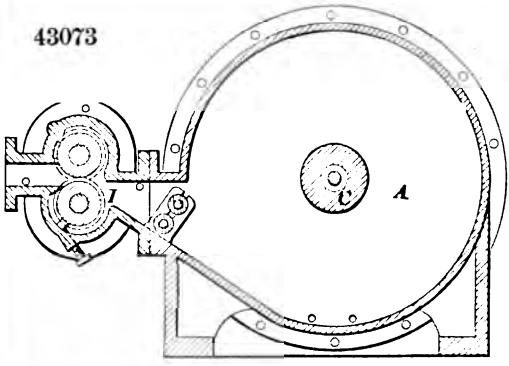

43074

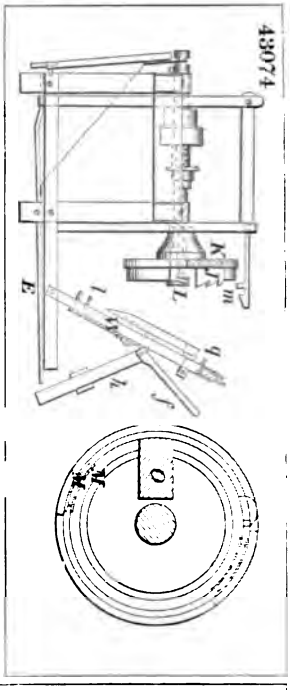

43075

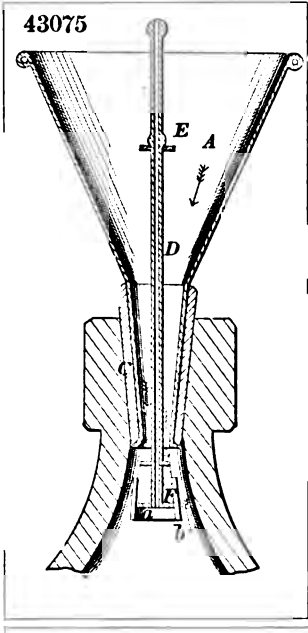

43077

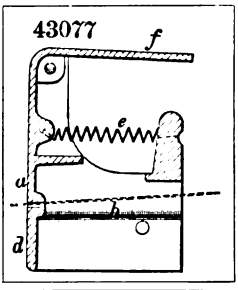

43076

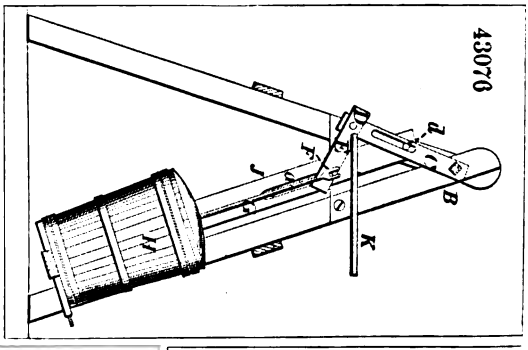

43078

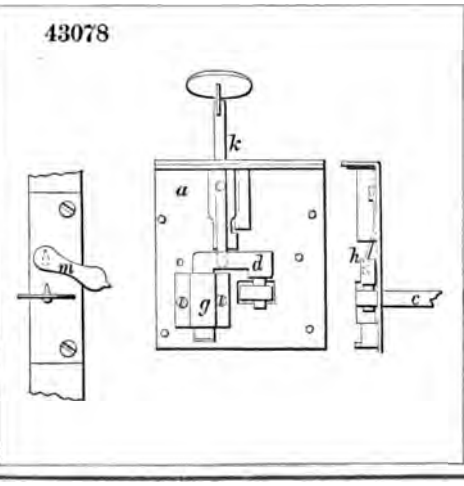

43079

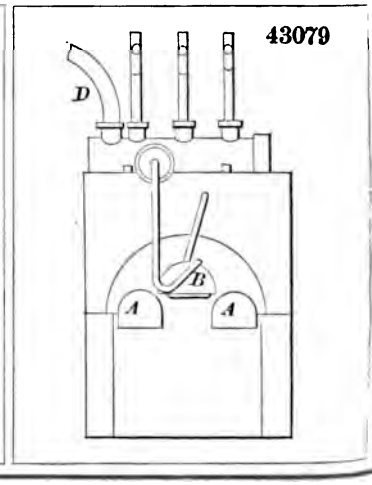

43081

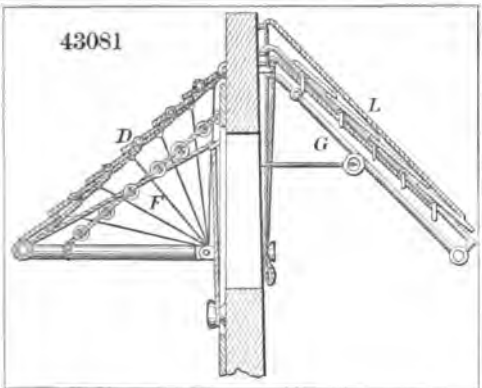

43082

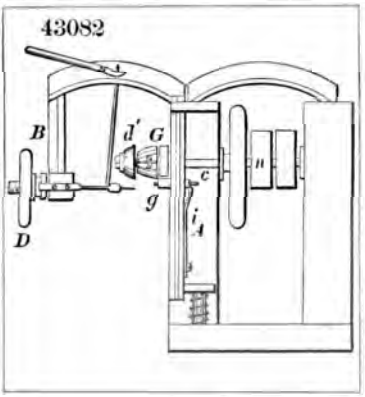

43083

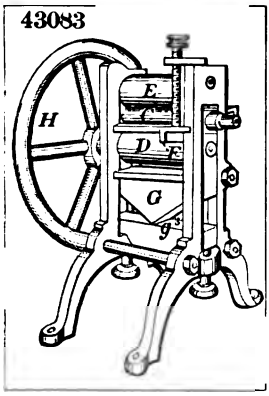

43084

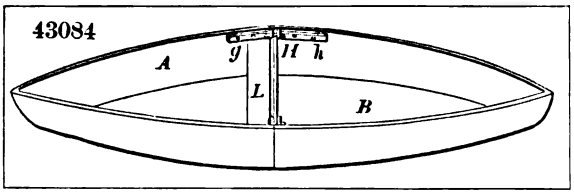

43085

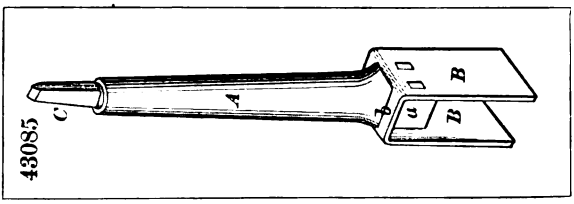

43087

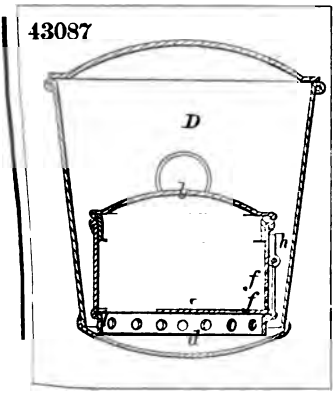

43088

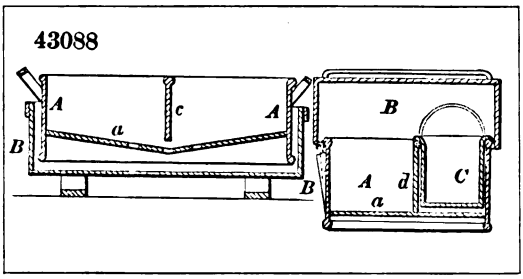

43089

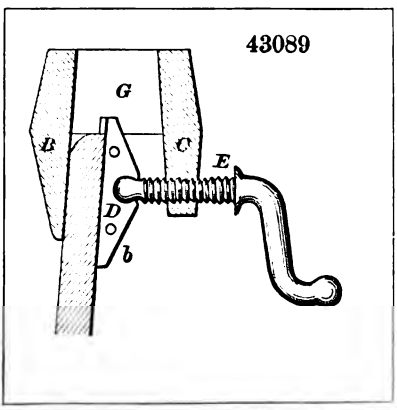

43086

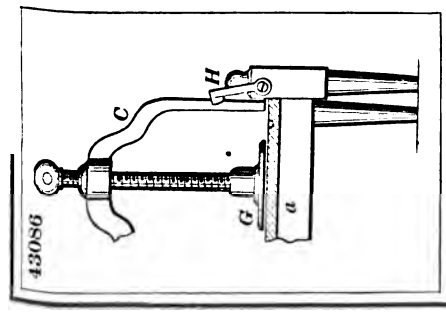

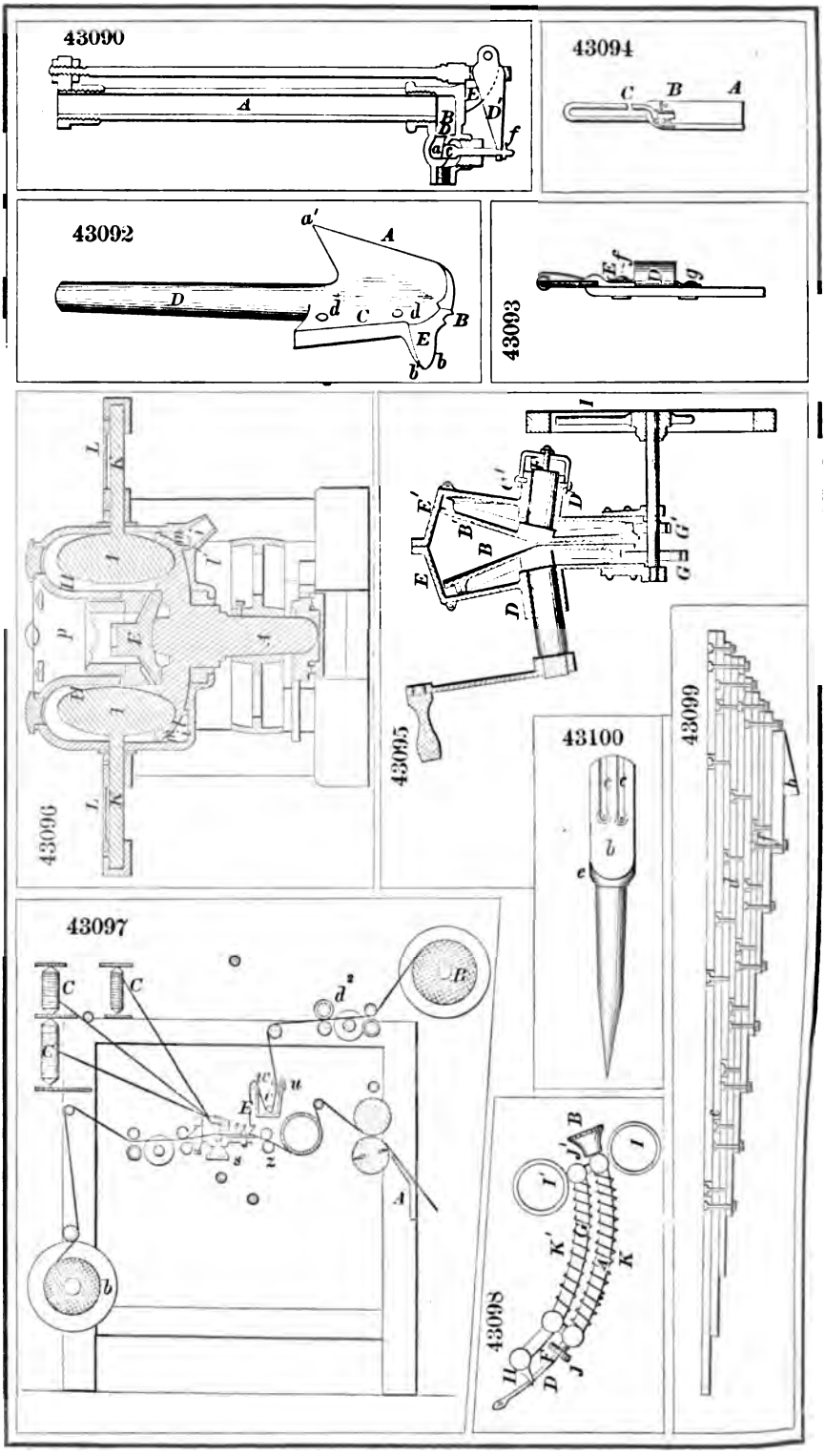
43090
43094
43092
43093
43096
43095
43100
43099
43097
43098

43101

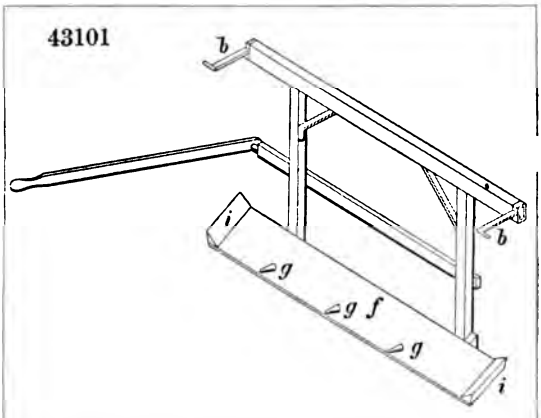

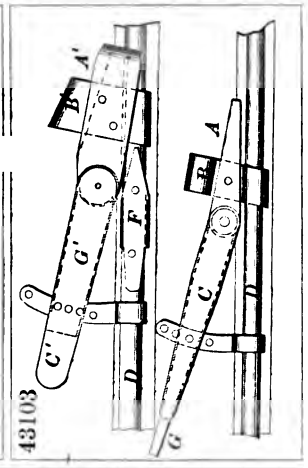

43103

43102

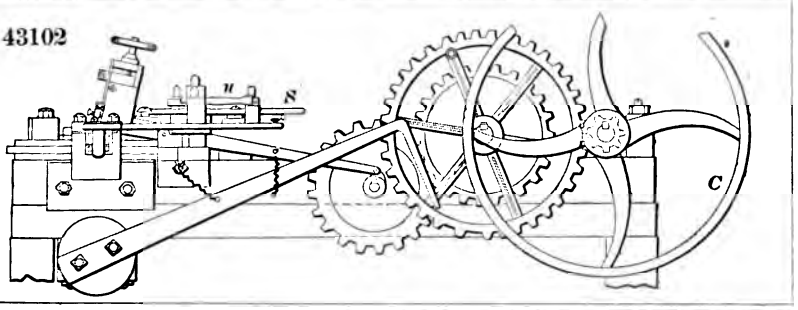

43105

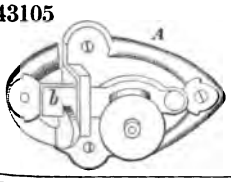

43106

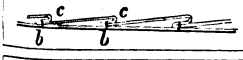

43108

43104

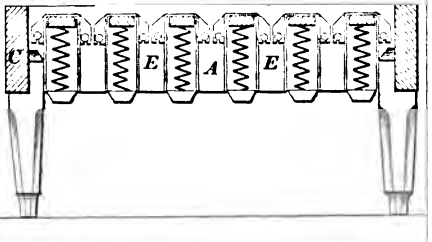

43107

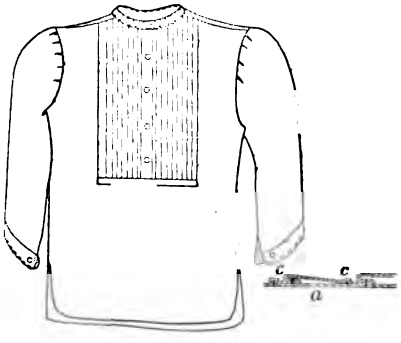

43109

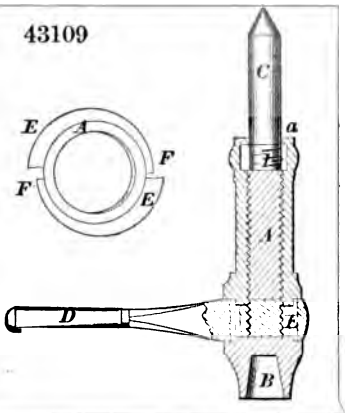

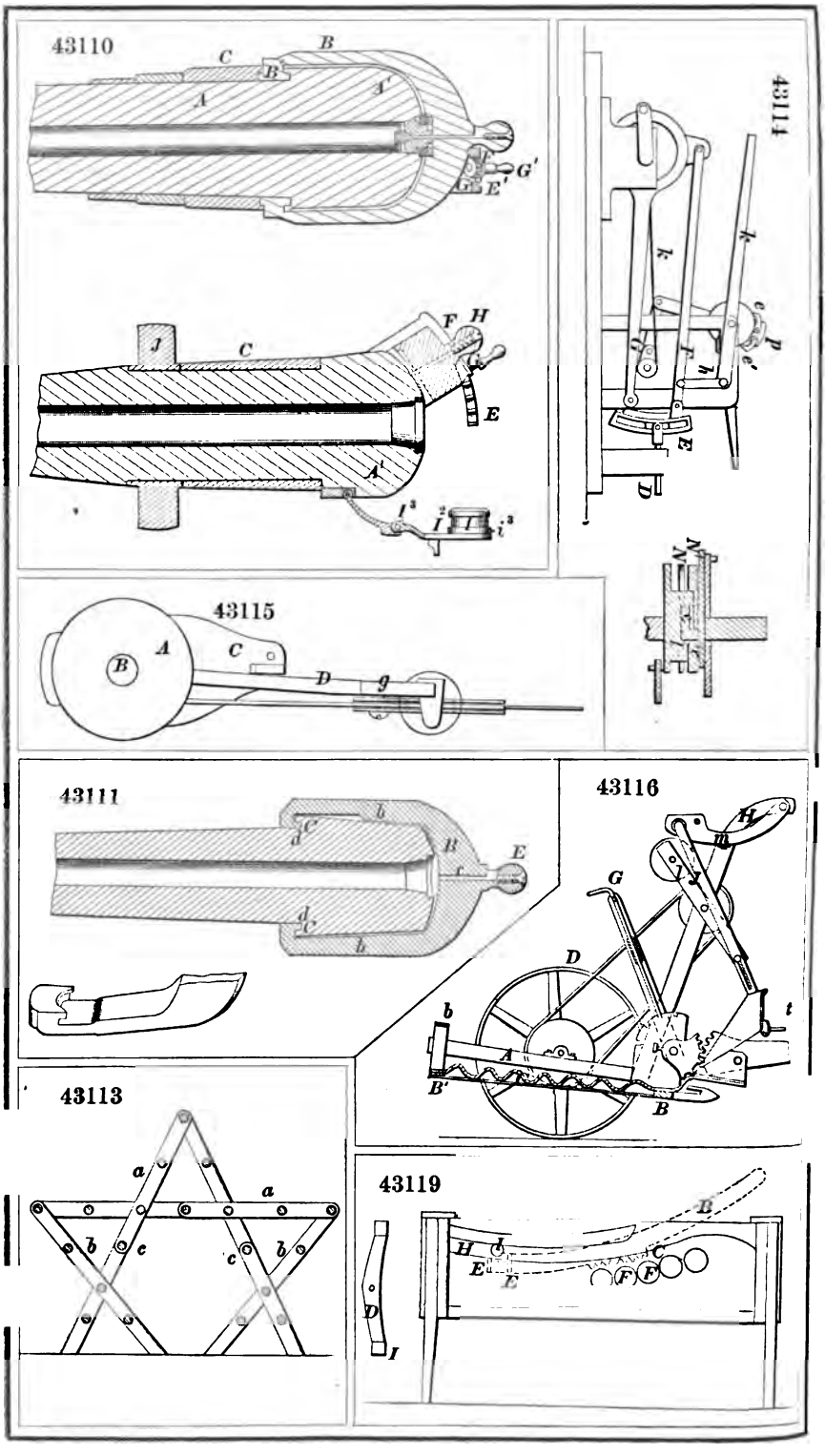
43110
43114
43115
43111
43116
43113
43119

43121

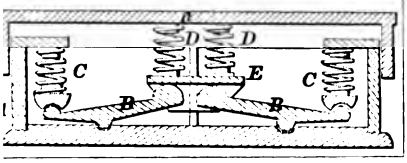

43122

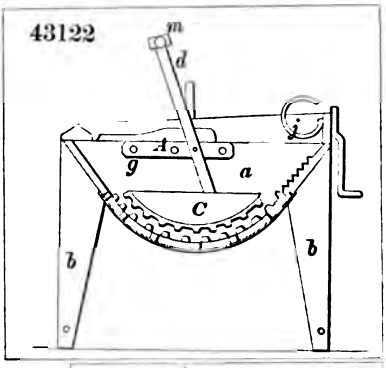

43125

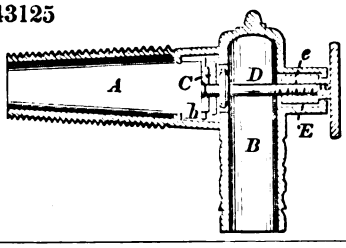

43124

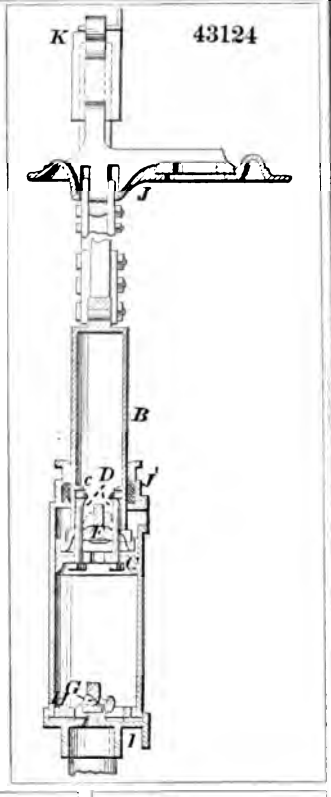

123

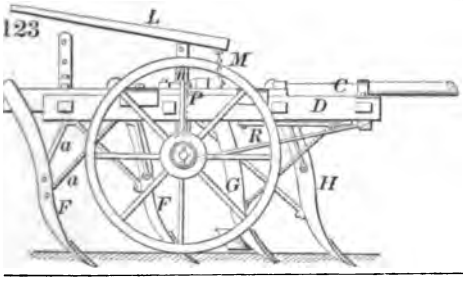

3127

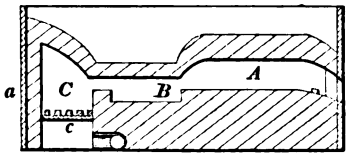

129

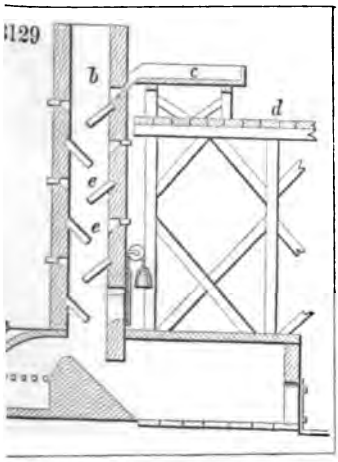

43126

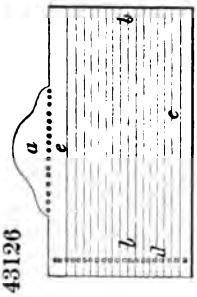

43130

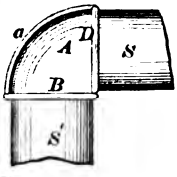

43131

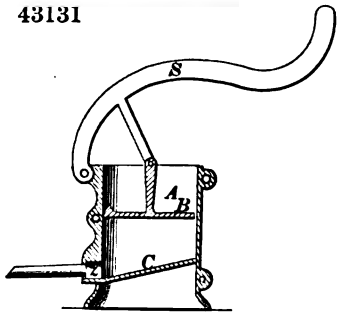

43136

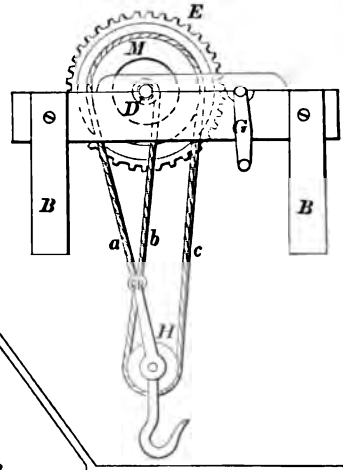

43132

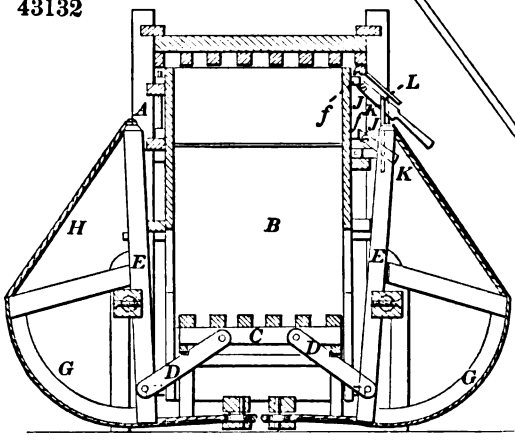

43133

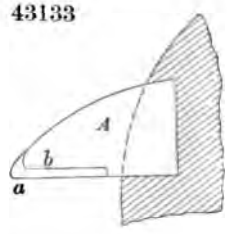

43135

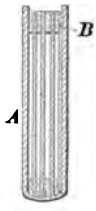

43137

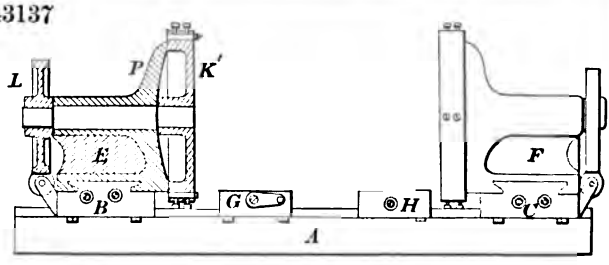

43134

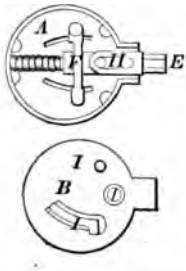

43138

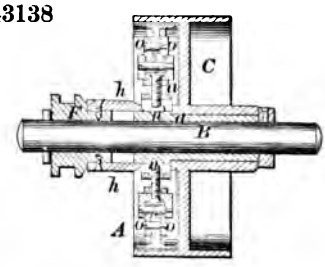

3139

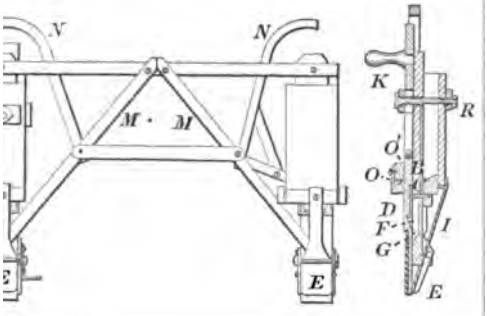

43143

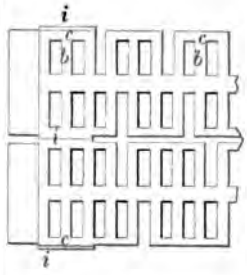

43140

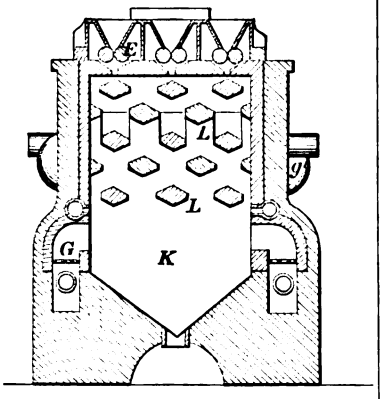

43141

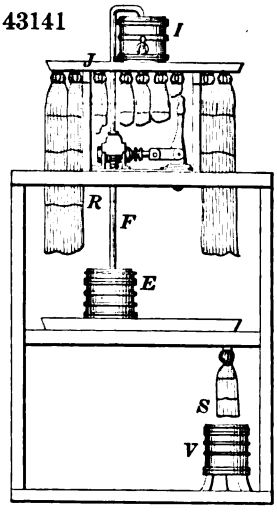

43142

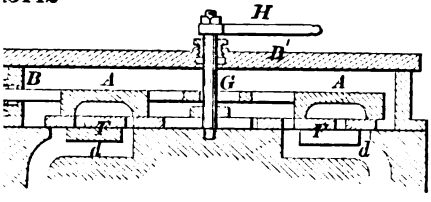

43145

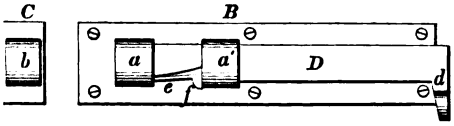

43144

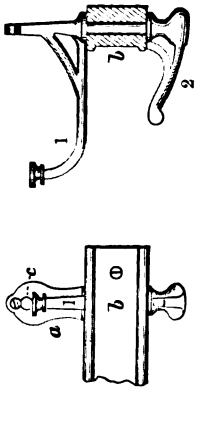

43146

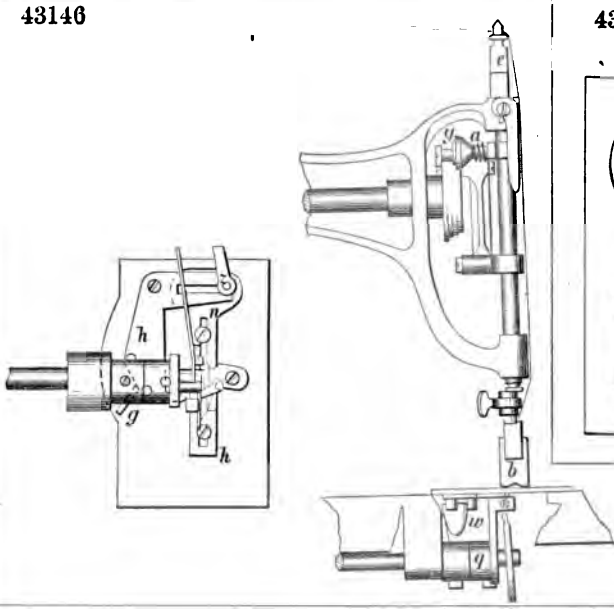

43147

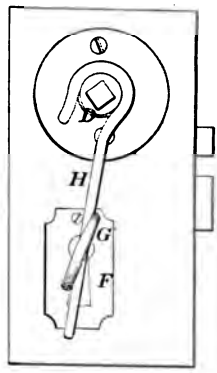

43149

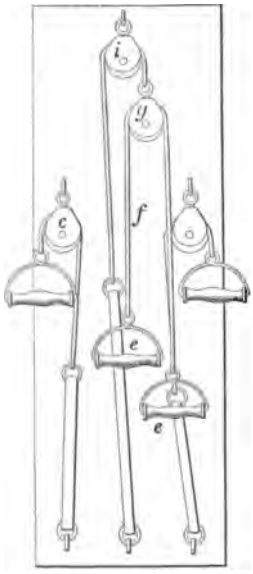

43150

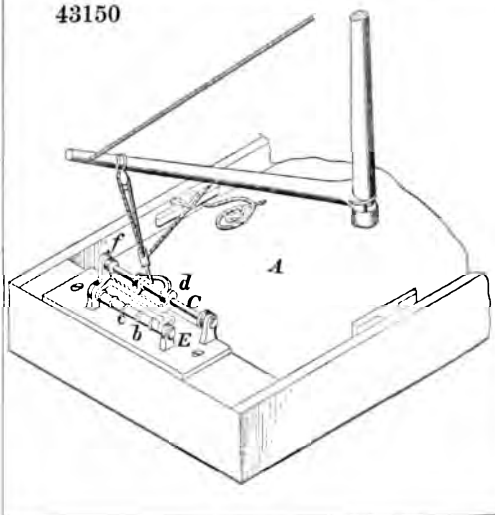

43151

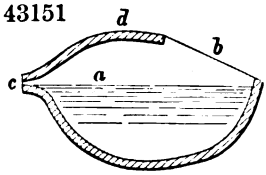

43152

43153

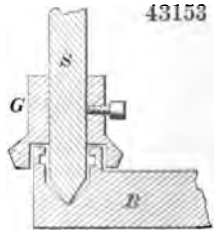

43154

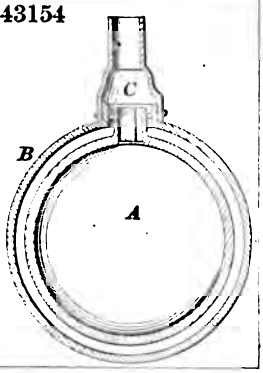

43164

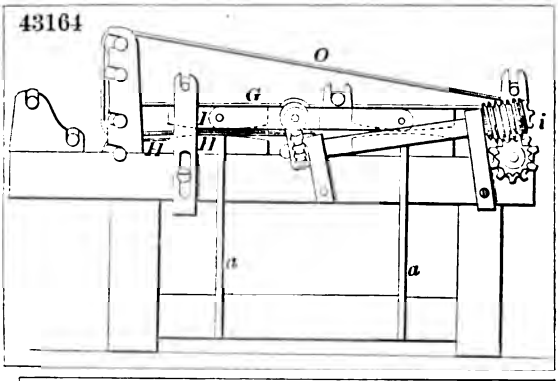

43155

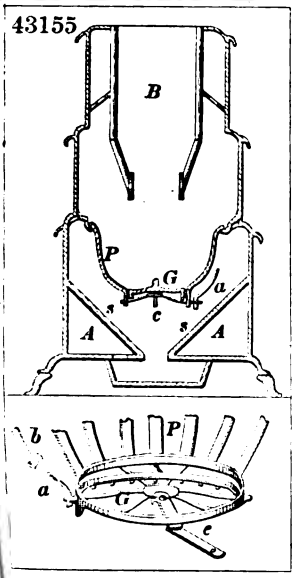

43159

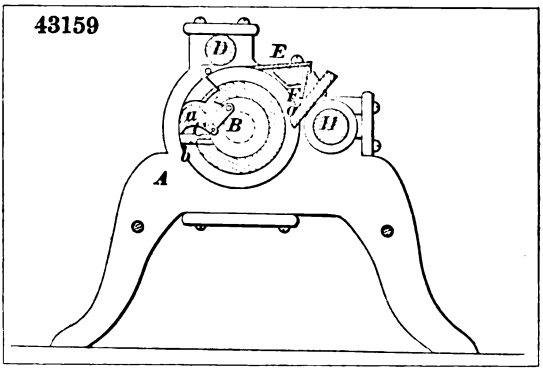

43158

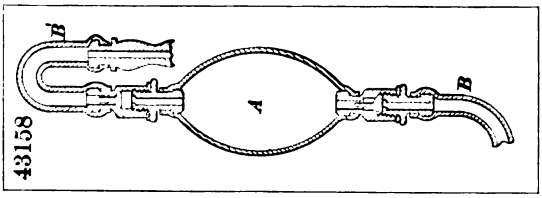

43165

43161

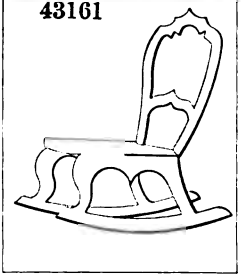

43162

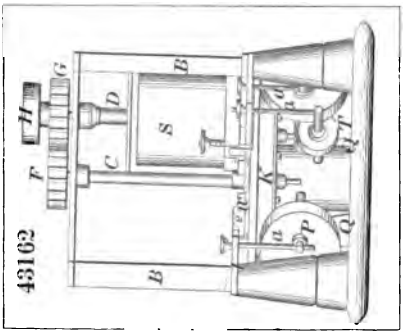

43163

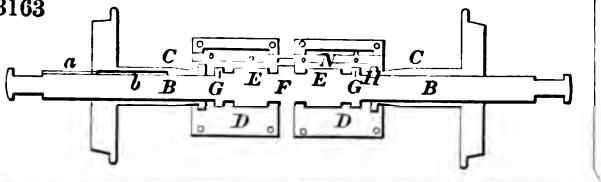

43167

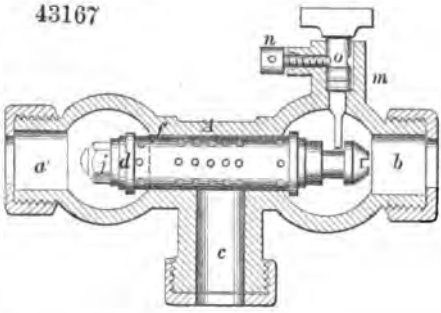

43175

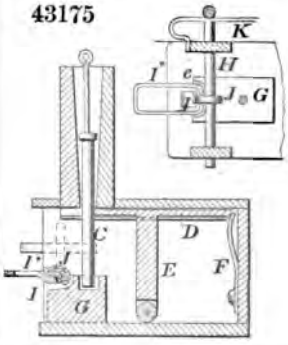

43173

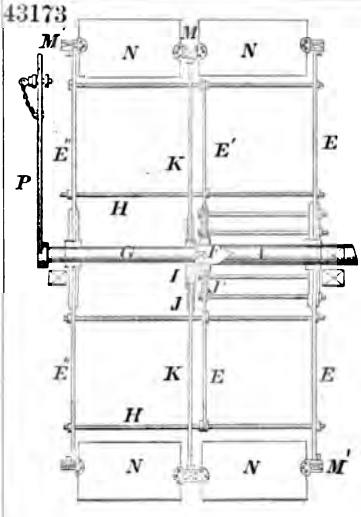

43174

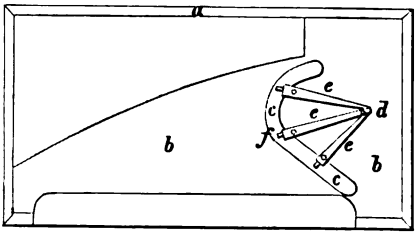

43177

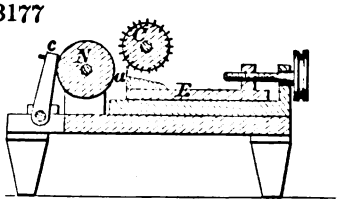

43178

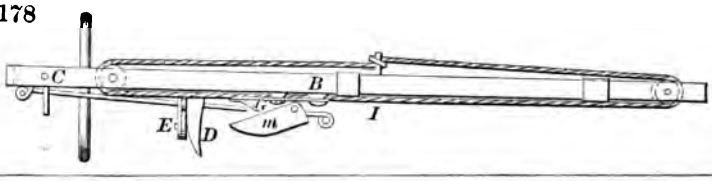

43170

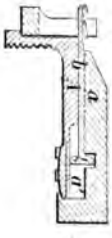

43179

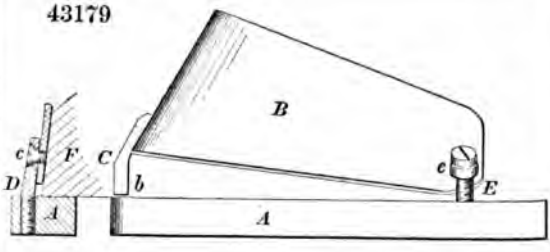

43180

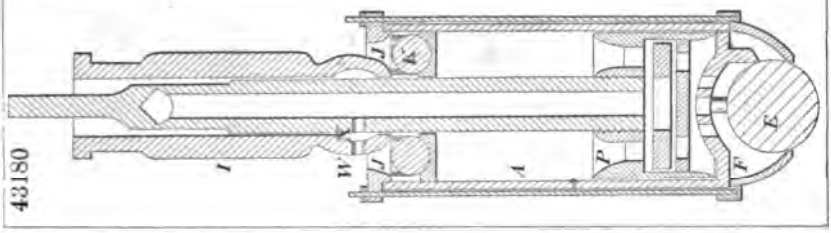

43182

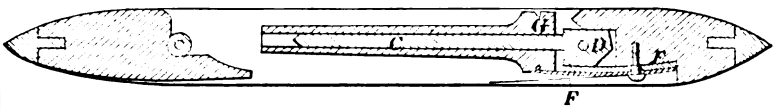

43181

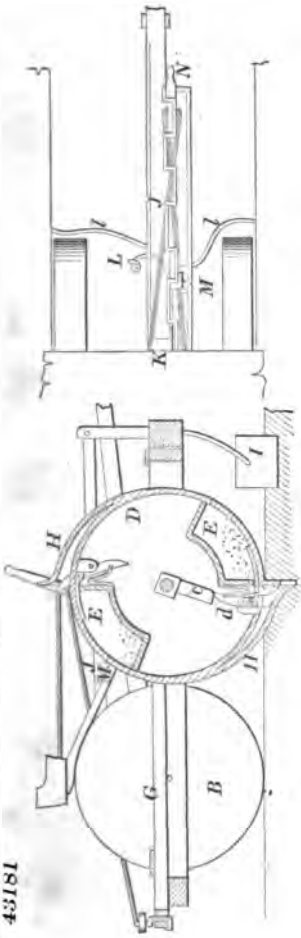

43183

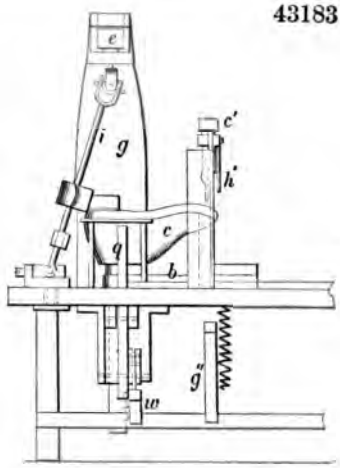

43184

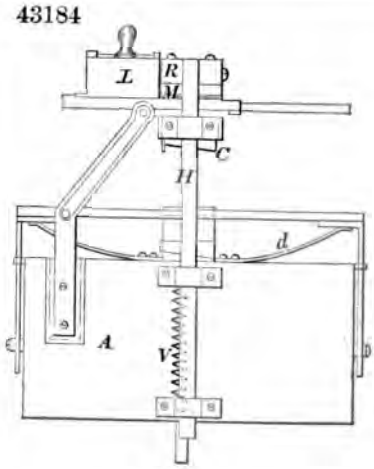

43185

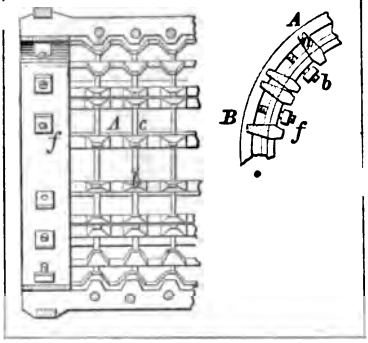

43187

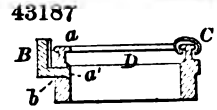

43190

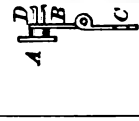

43194

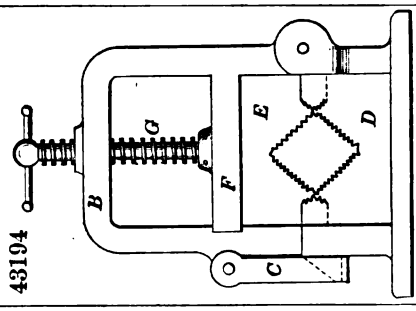

43186

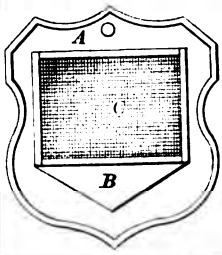

43189

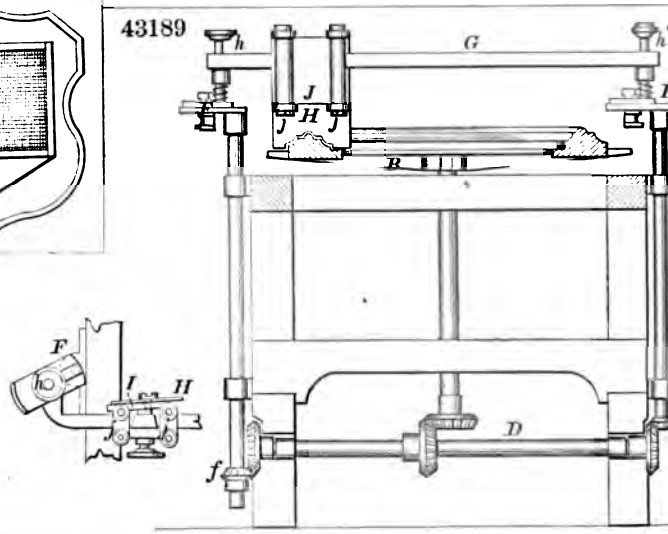

43191

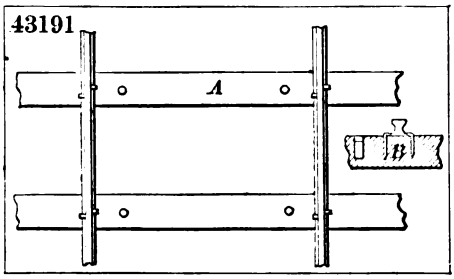

43195

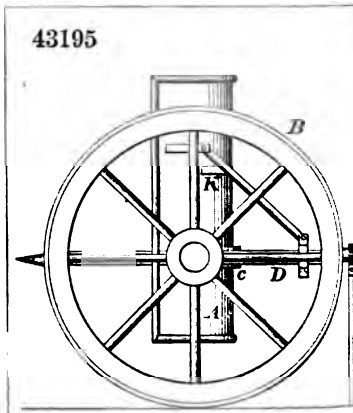

43193

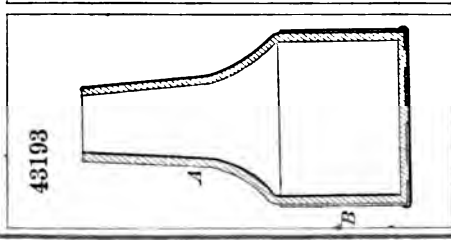

43196

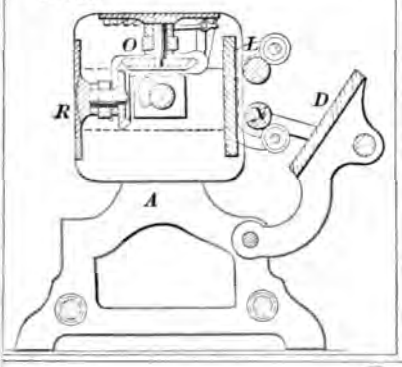

43197

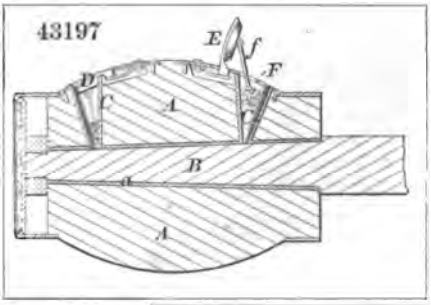

43198

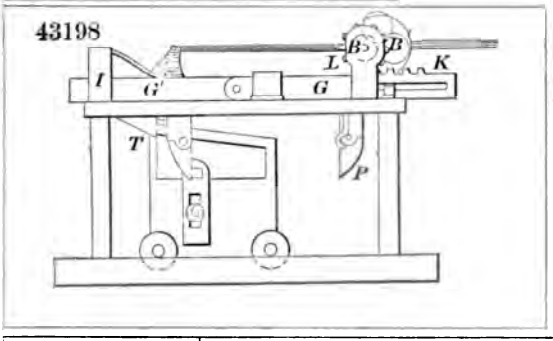

43200

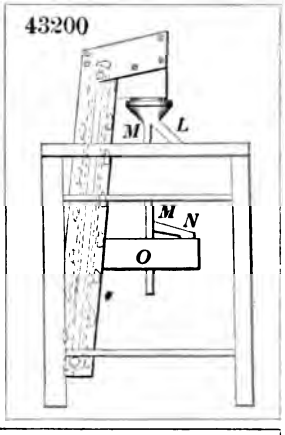

43199

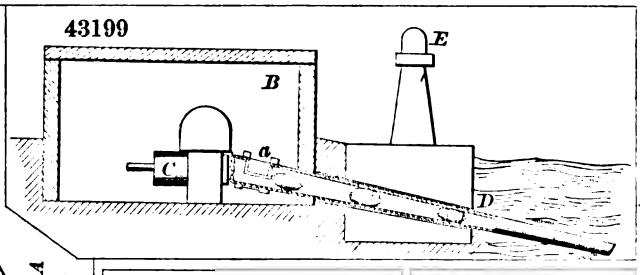

43201

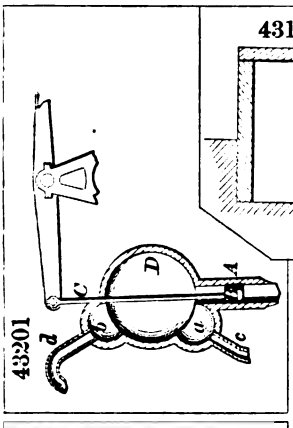

43203

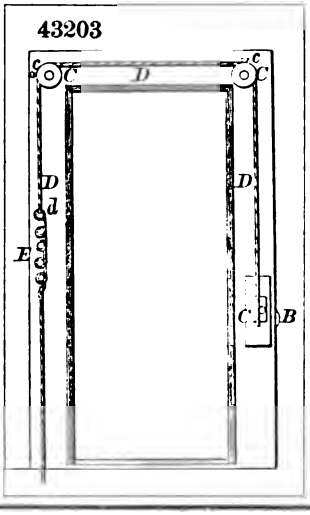

43204

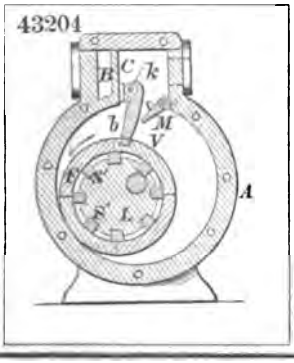

43202

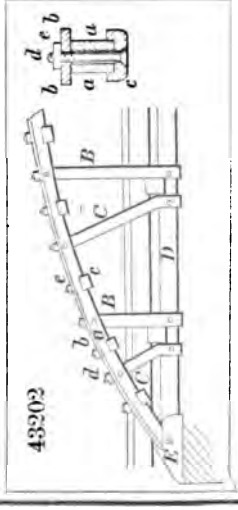

43205

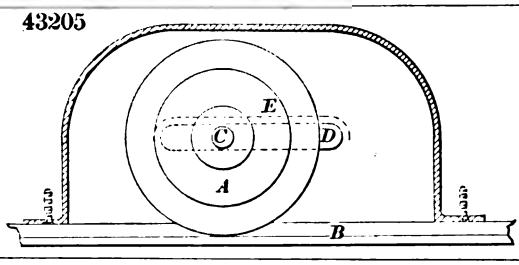

43206

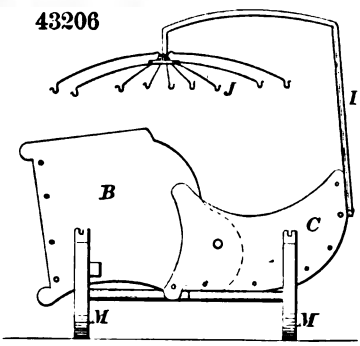

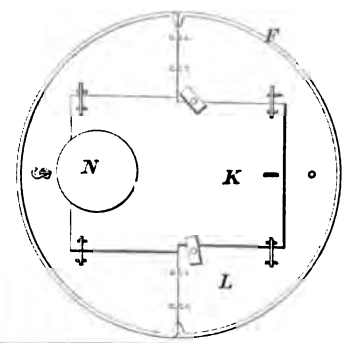

43210

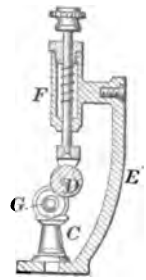

43209

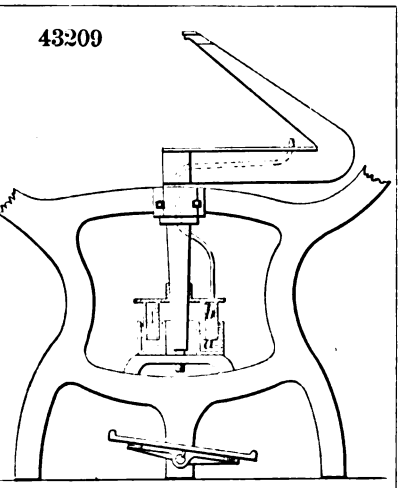

43211

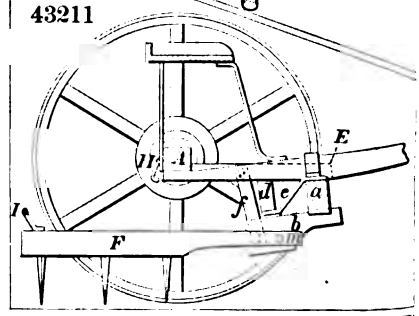

43207

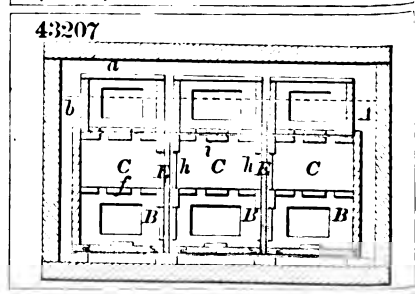

43208

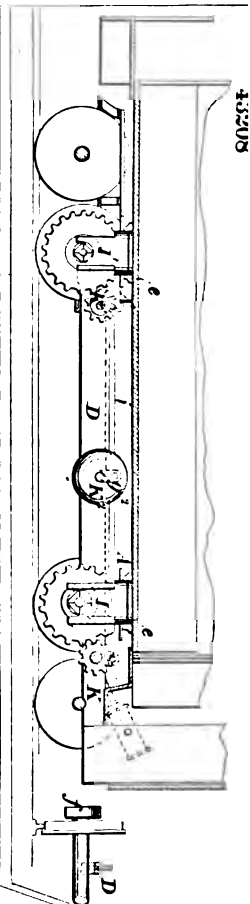

43212

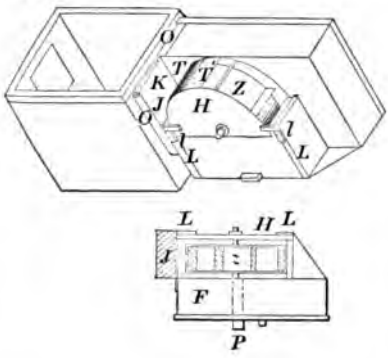

43215

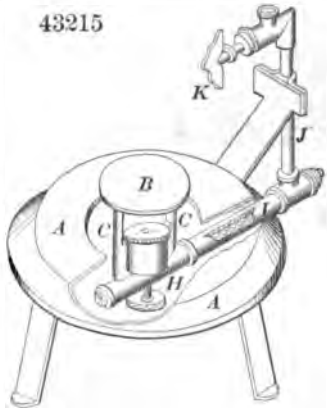

43213

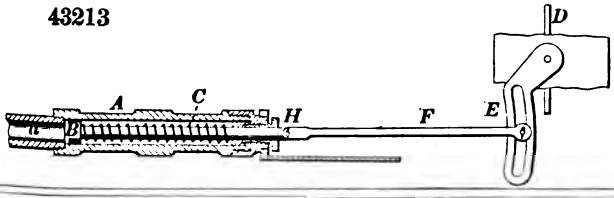

43214

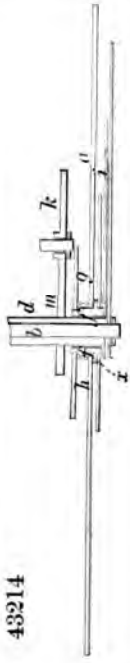

43216

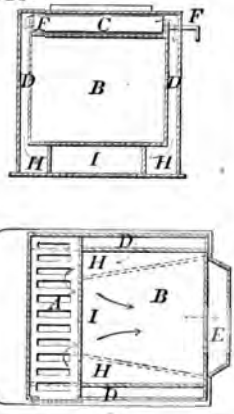

43217

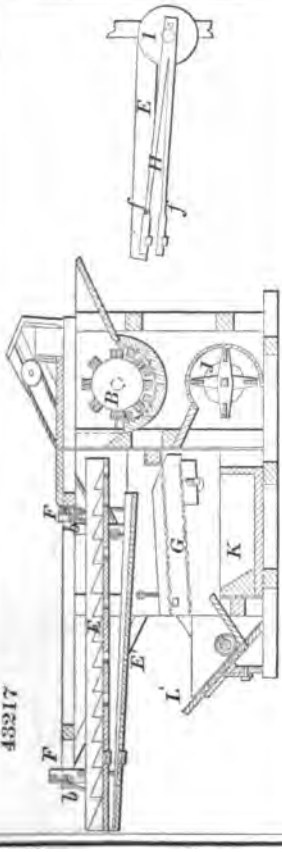

43218

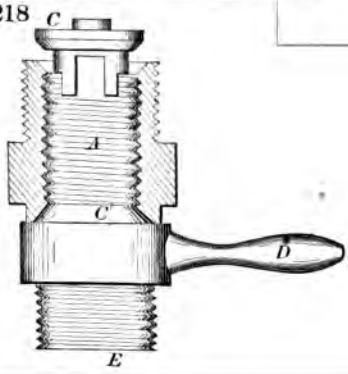

43219

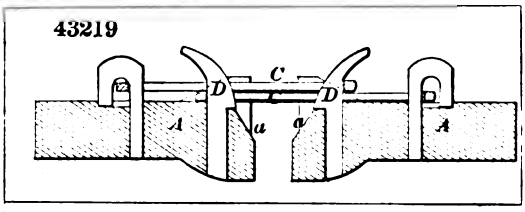

43224

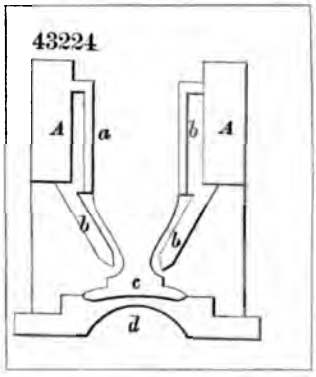

43220

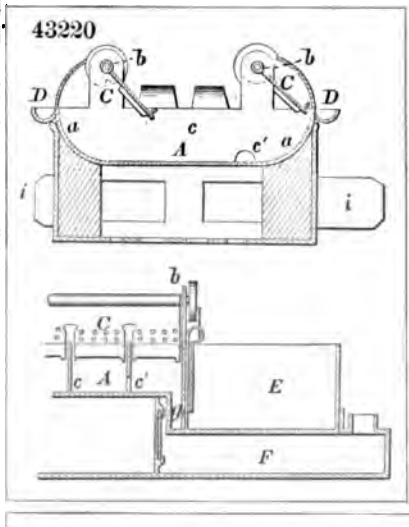

43225

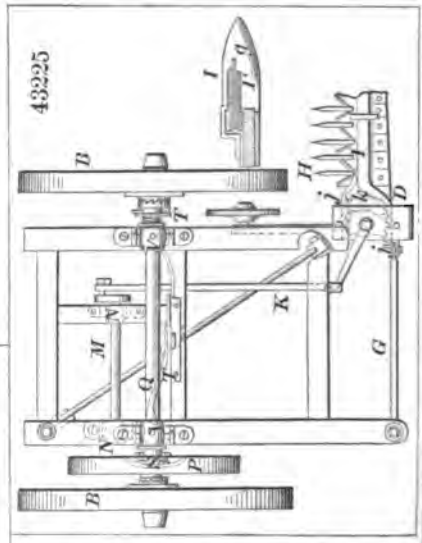

43222

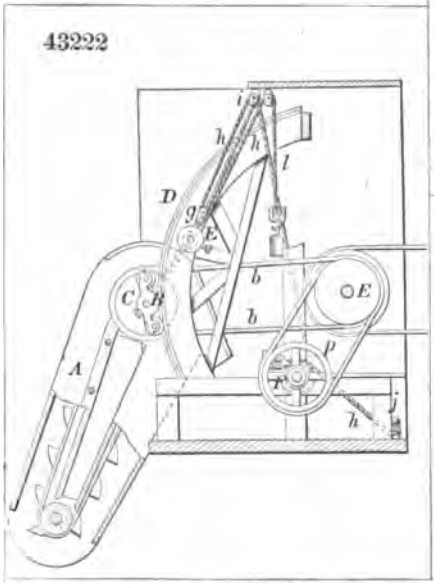

43223

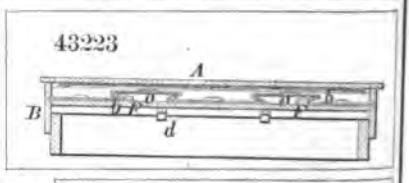

43226

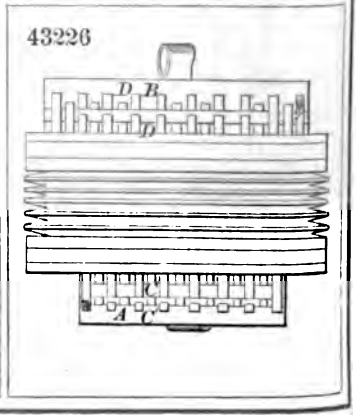

43221

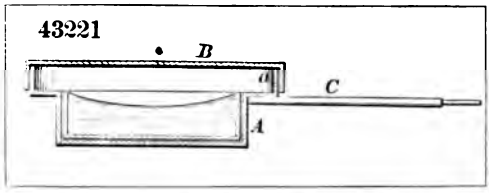

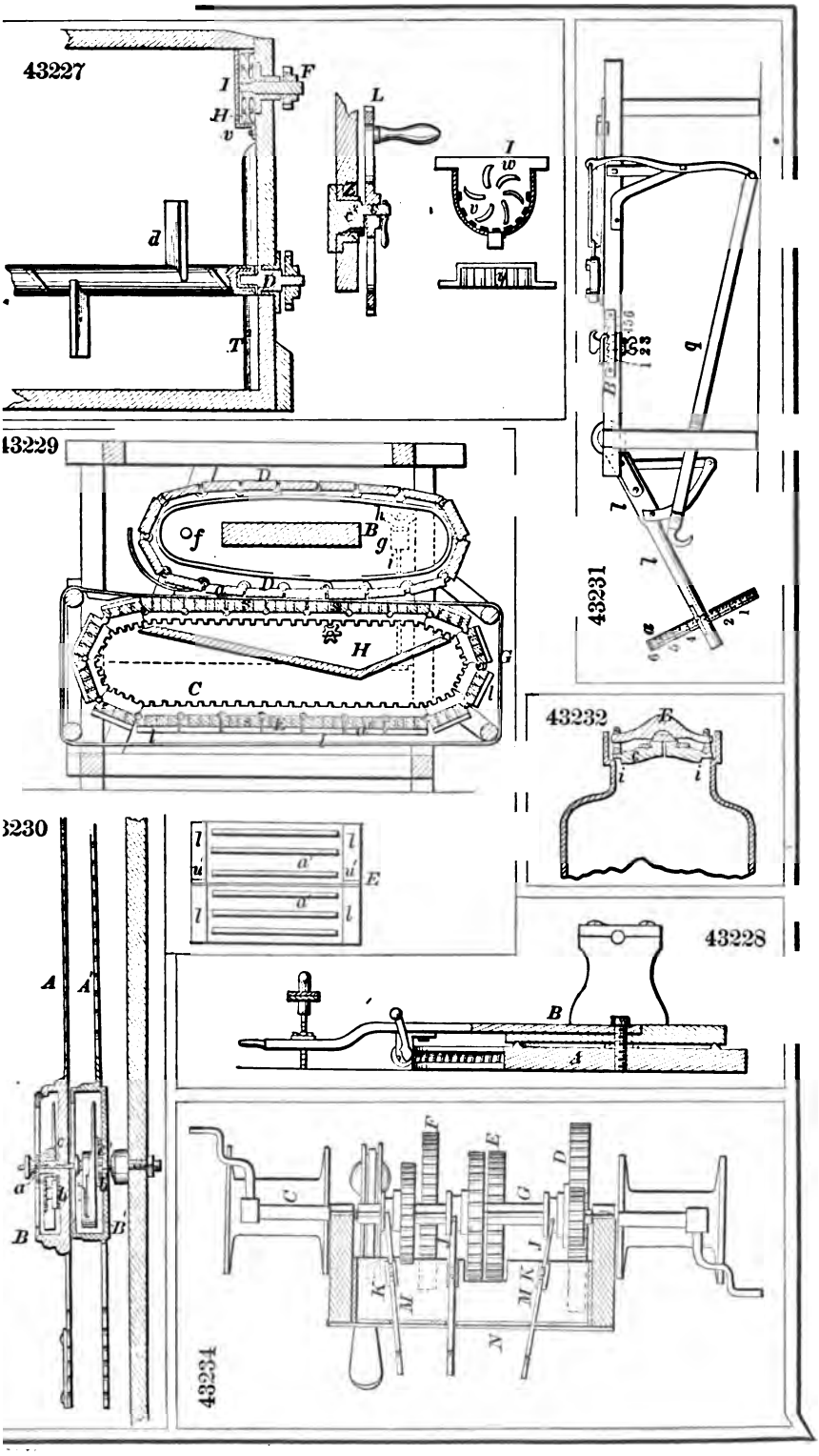
43227
43229
43231
43232
43228
43230
43234

43235

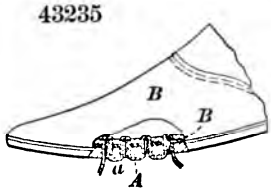

43243

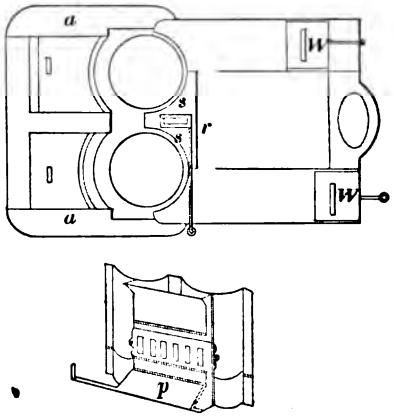

43237

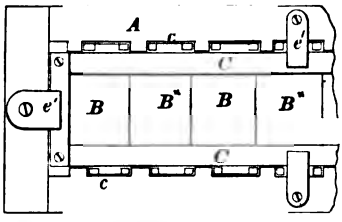

43239

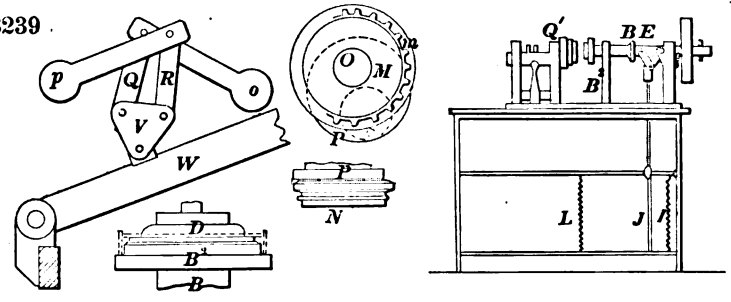

43238

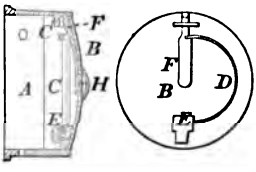

43236

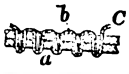

43241

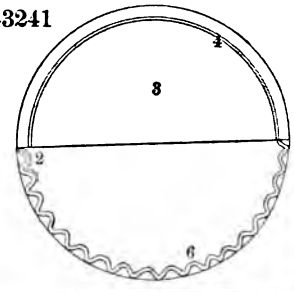

43242

43240

43244

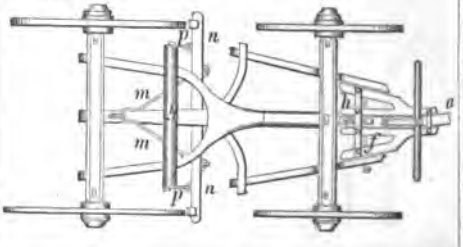

43245

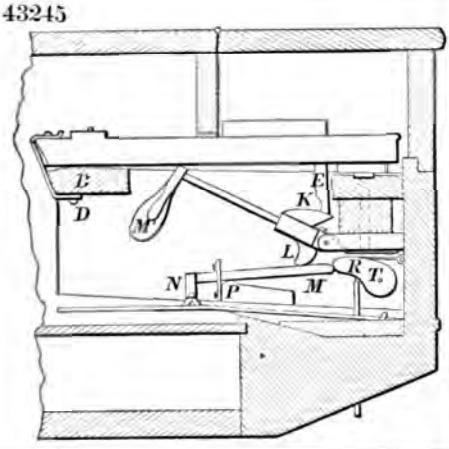

43246

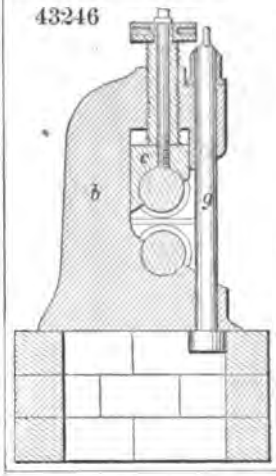

43248

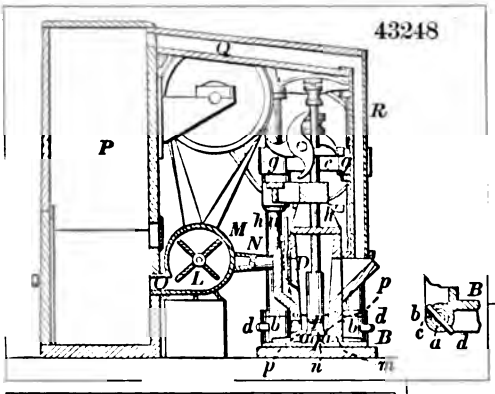

43249

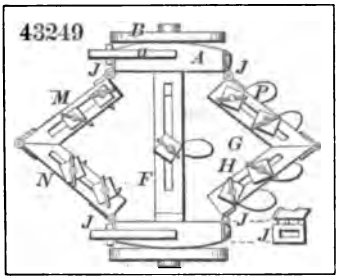

43251

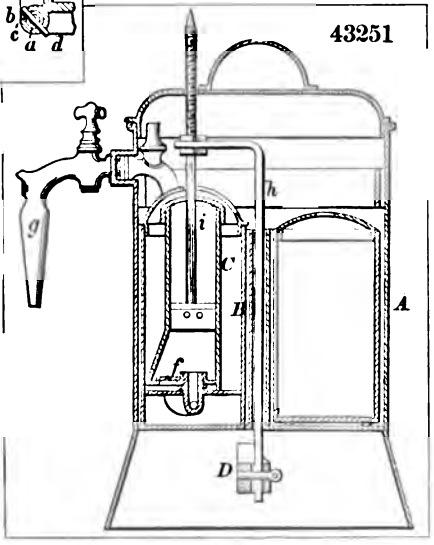

43247

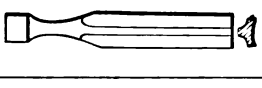

43250

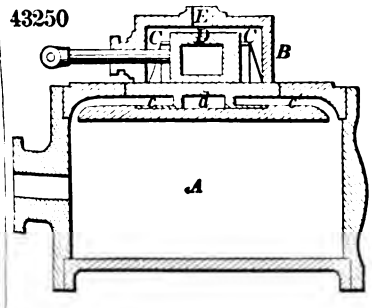

43252

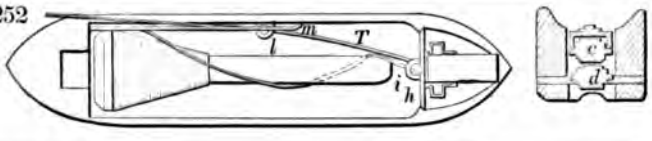

43253

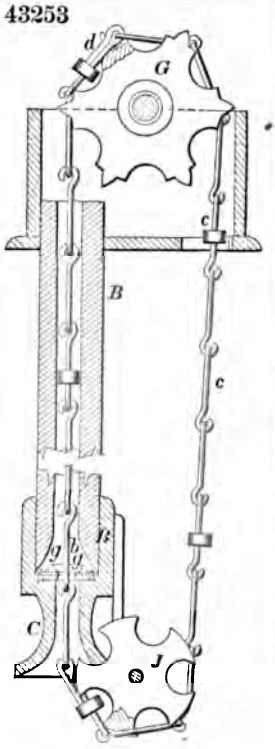

43256

43258

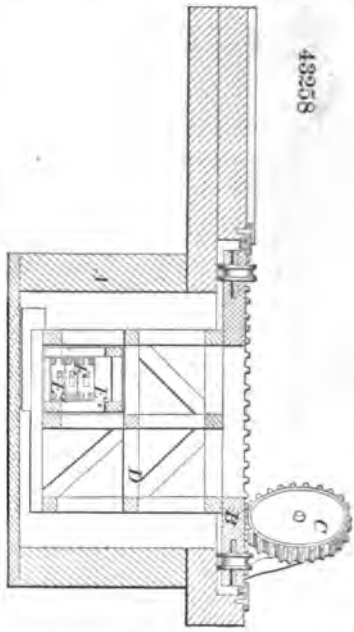

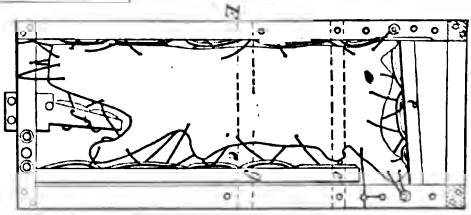

43255

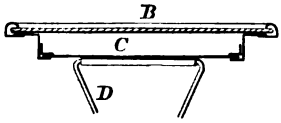

43254

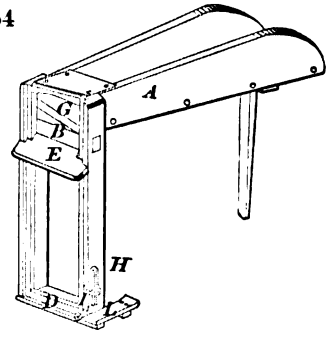

43257

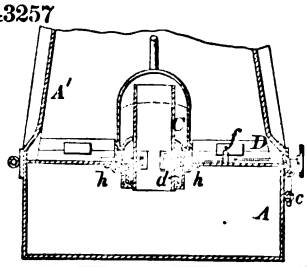

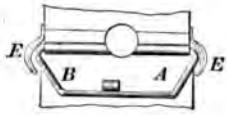

43259

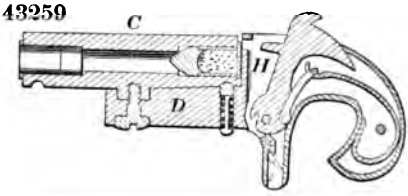

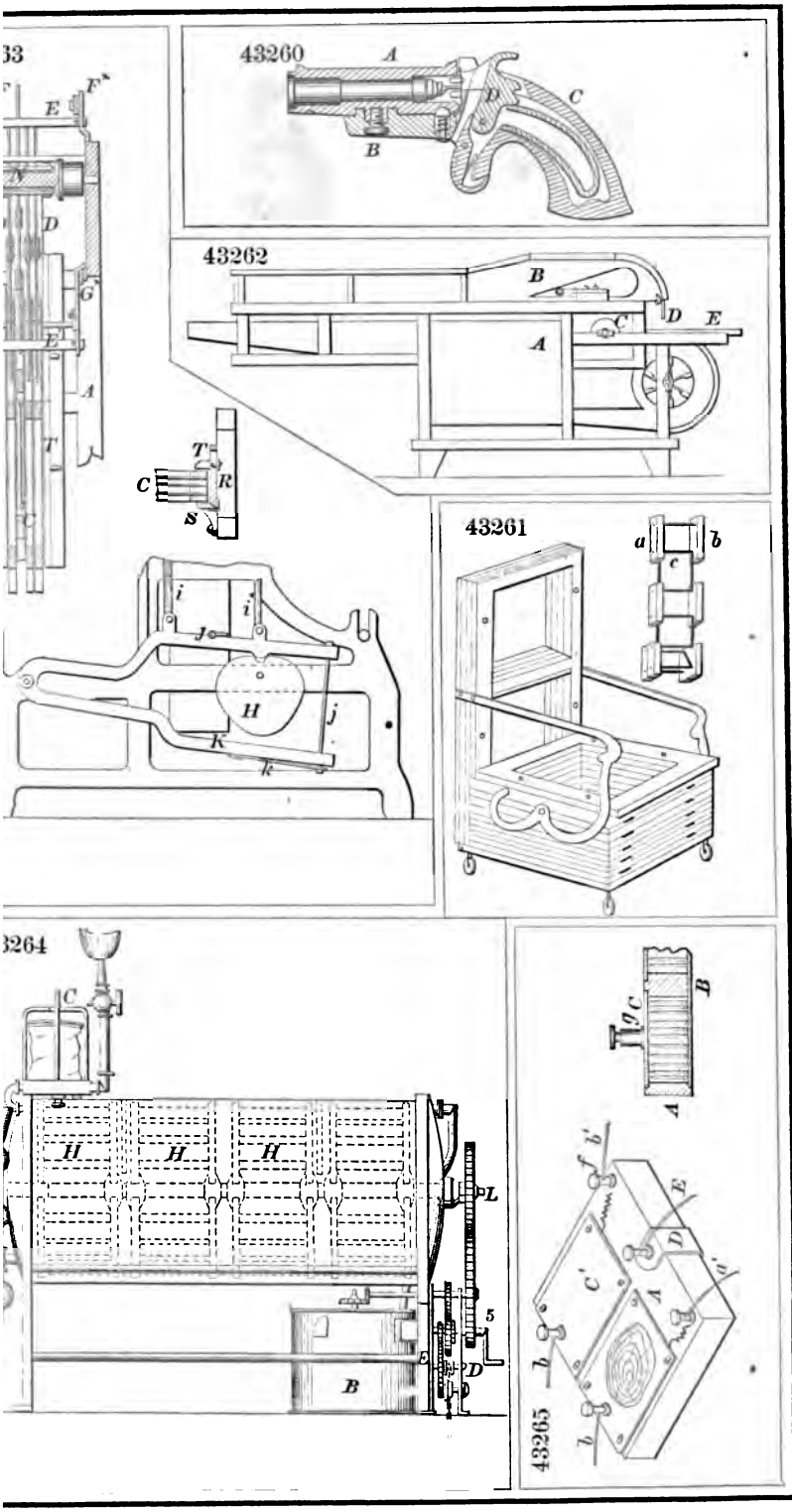
43260
A
B
C
D
43262
A
B
C
D
E
43261
a
b
c
43265
A
B
C
D
E
H
L
5

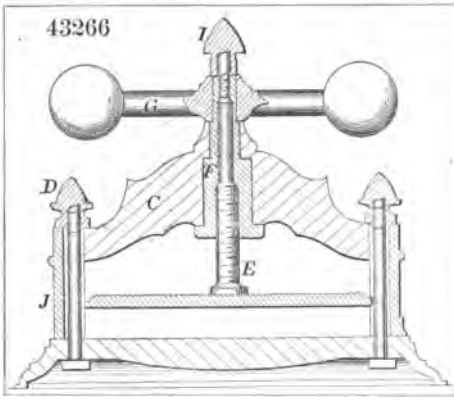
43266
I
G
D
C
F
E
J

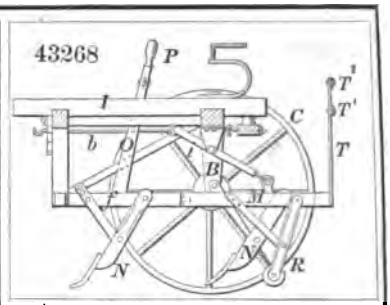
43268
P
T'
T'
T
C
B
M
N
N
R

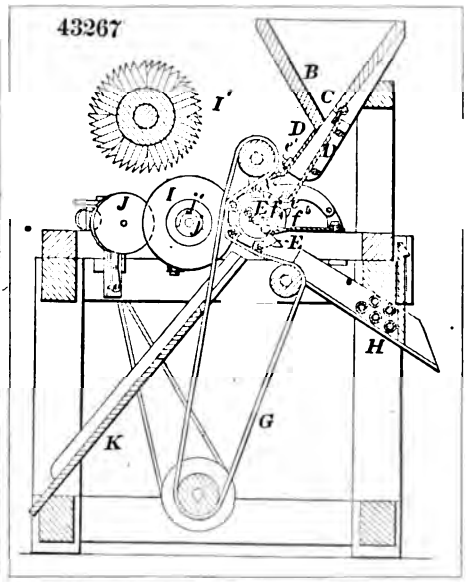
43267
I'
B
C
D
J
I
E
H
G
K

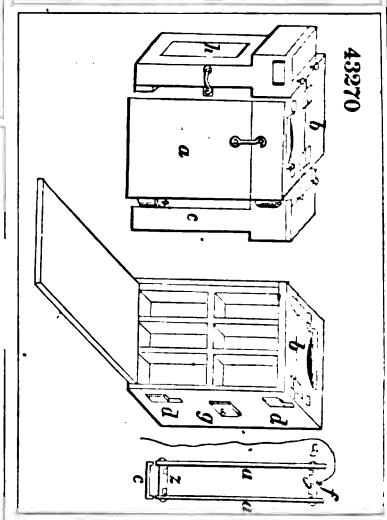
43270

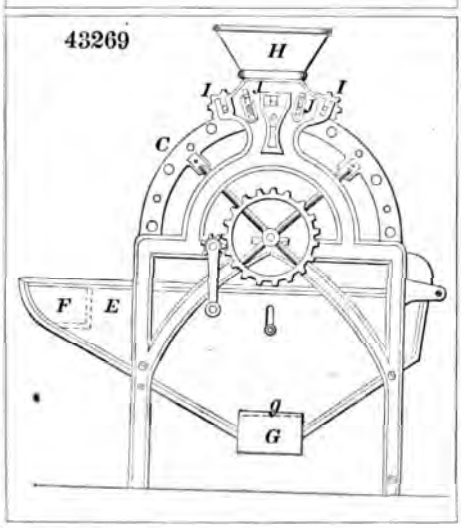
43269
H
I
I
J
C
F
E
G

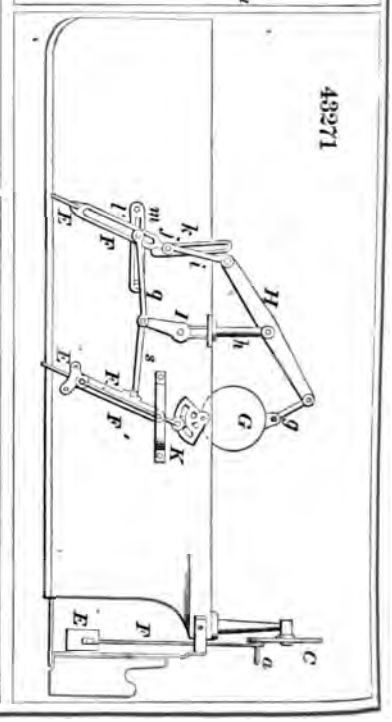
43271
H
G
K
C

43272

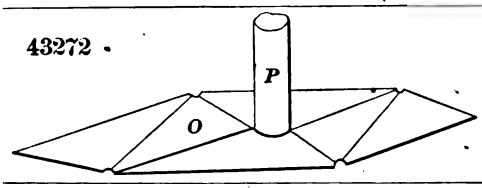

43273

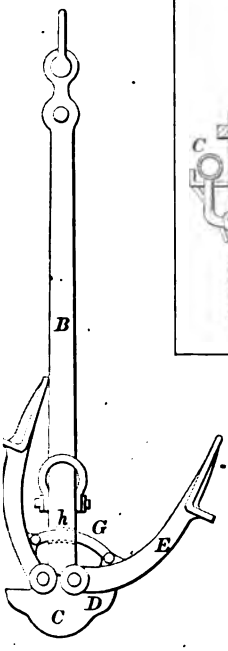

43274

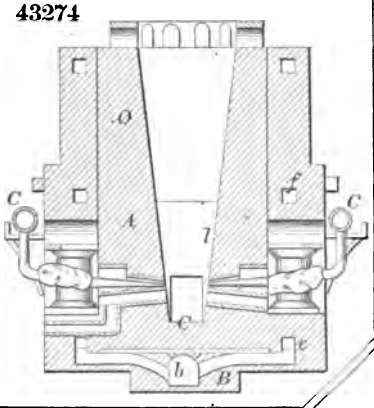

43275

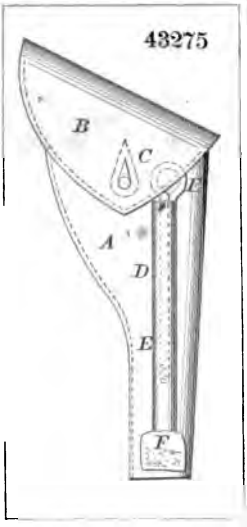

43276

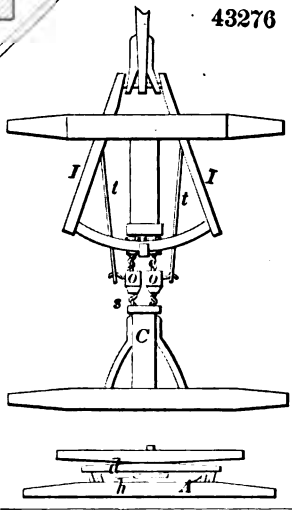

43279

43277

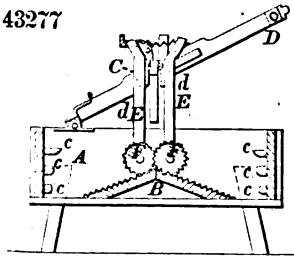

43280

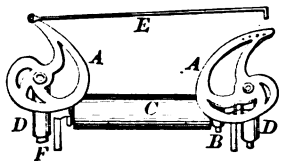

43278

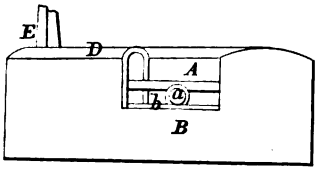

43281

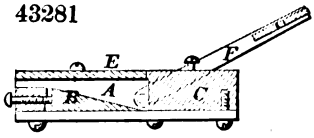

43282

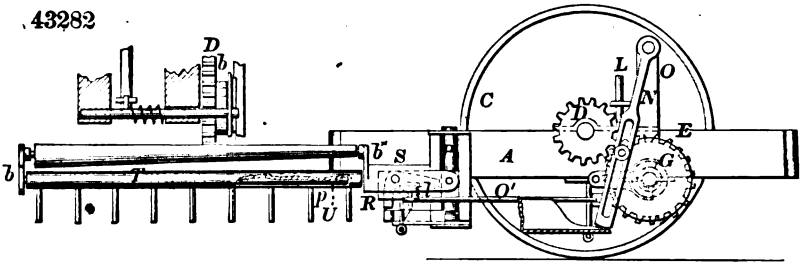

43284

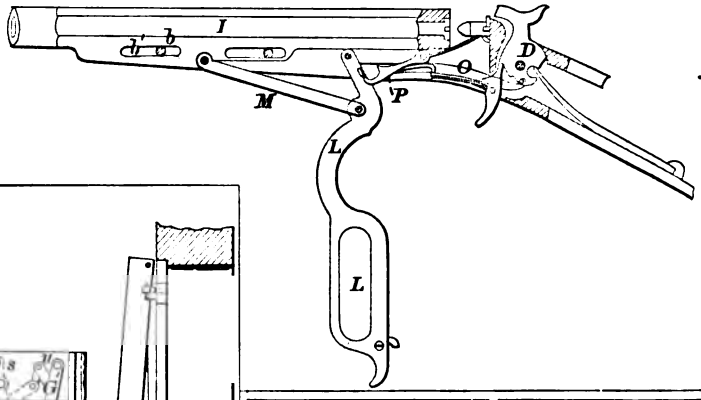

43283

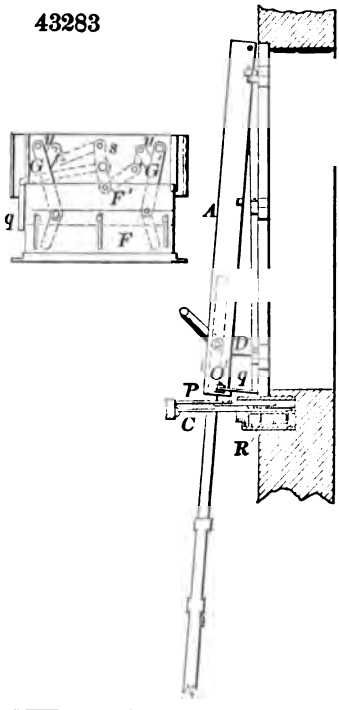

43286

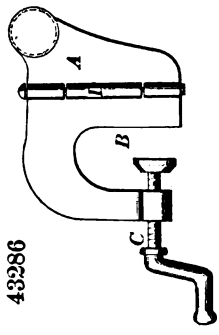

43285

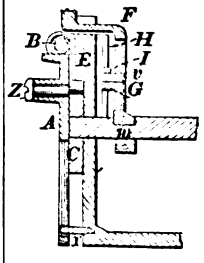

43288

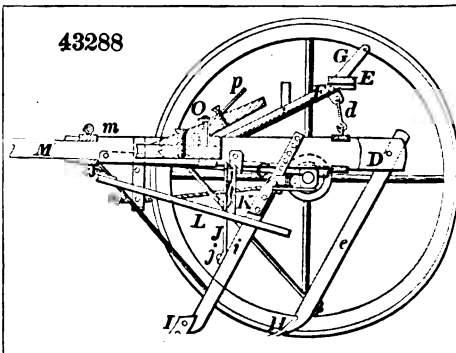

43287

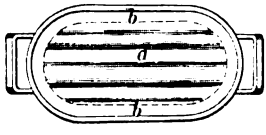

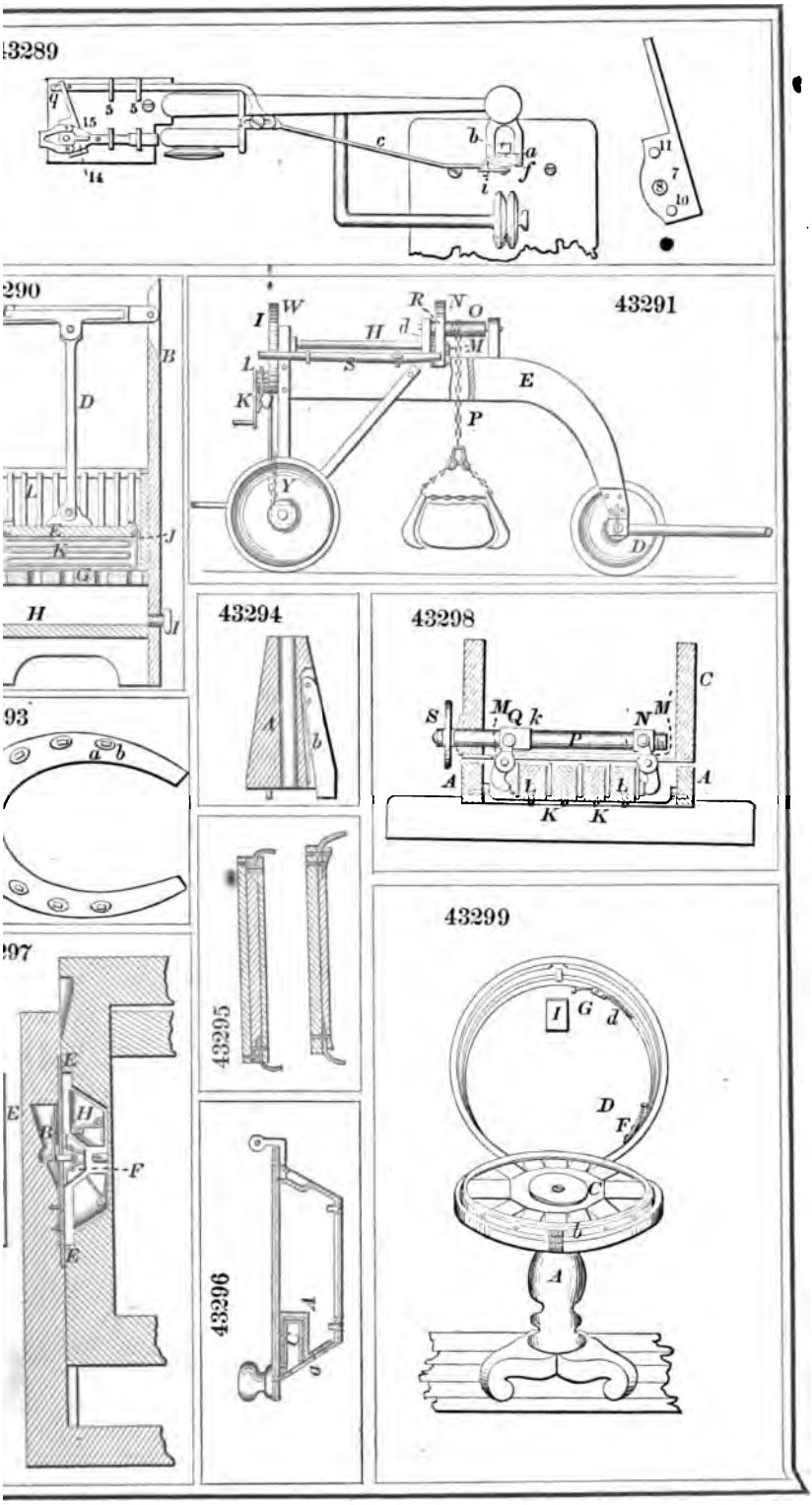
43289
43290
43291
43294
43298
43299
43295
43296
43297
93

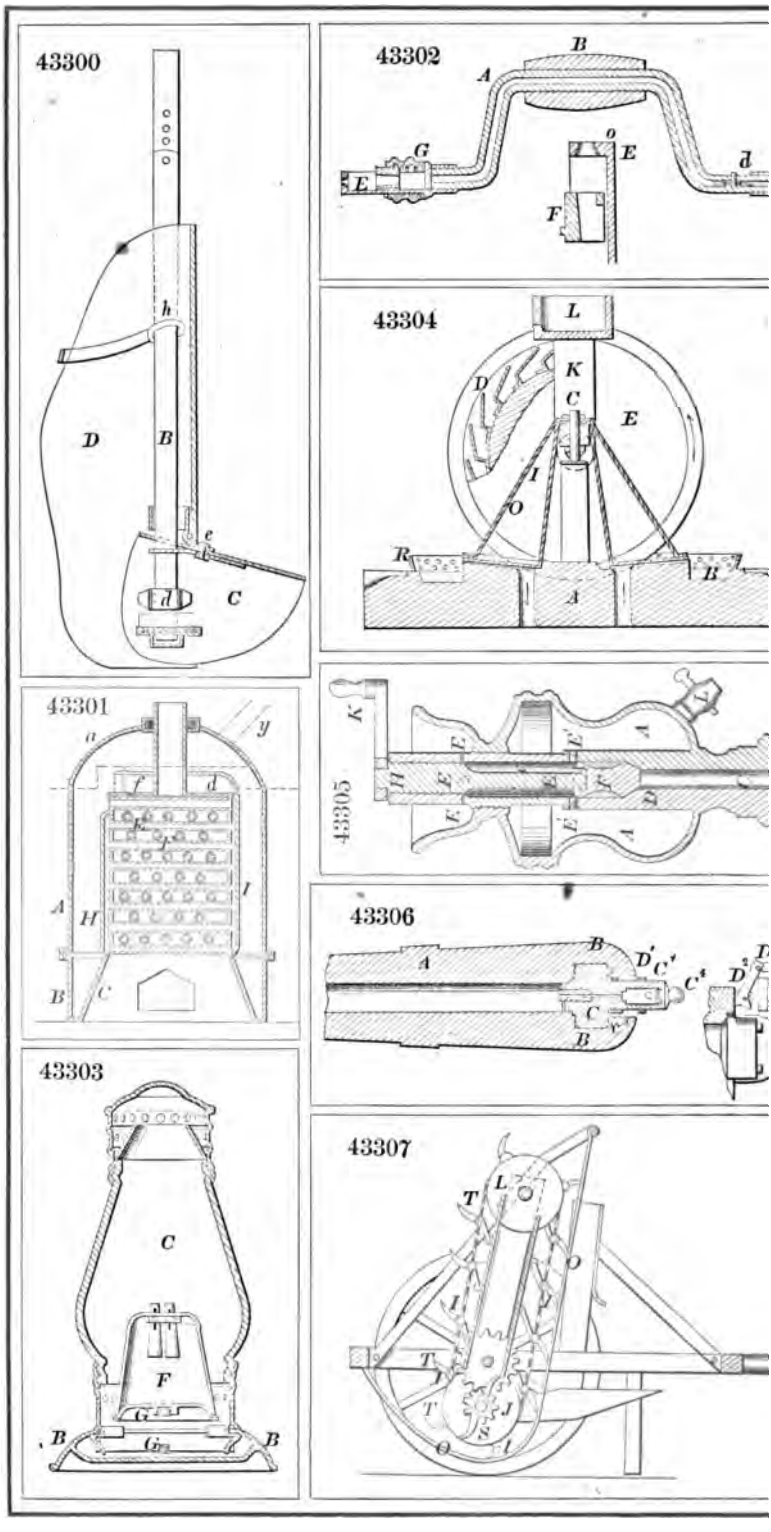
43300
h
D
B
e
d
C
43302
B
A
G
o
E
d
E
F
43304
L
K
C
D
E
I
O
R
B
A
43301
a
y
f
d
A
H
I
B
C
43305
K
E
A
H
E
B
E
A
43306
A
B
D'
C'
C
B
C'
D'
43303
C
F
G
B
G
B
43307
T
L
O
I
T
T
J
O
I

43308

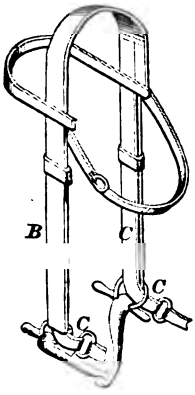

43309

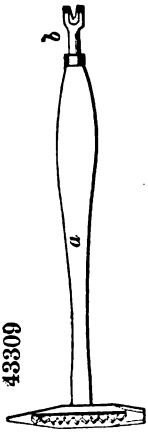

43310

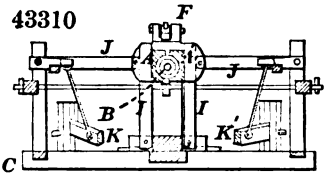

43314

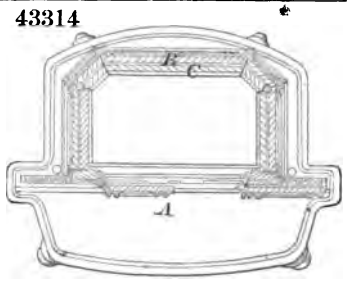

43311

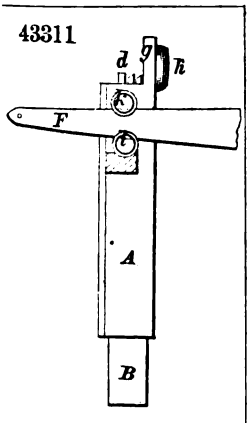

43312

43315

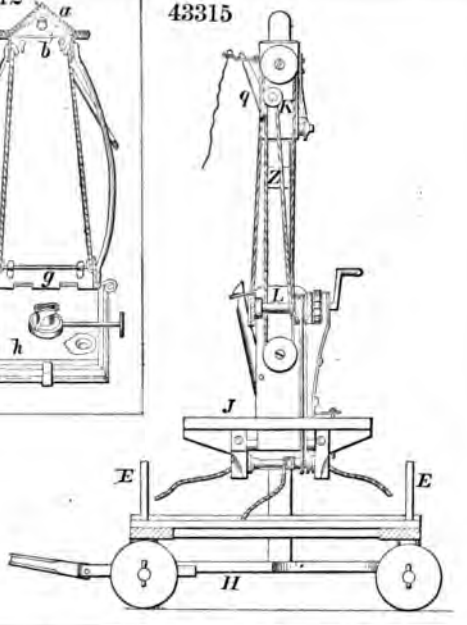

43313

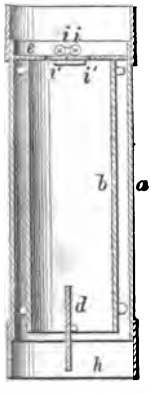

43316

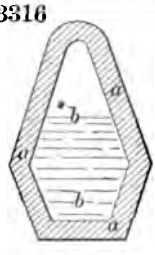

43317

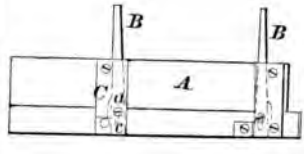

43318

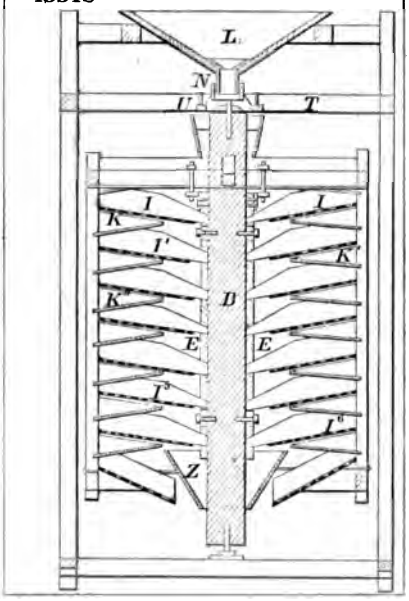

43321

43319

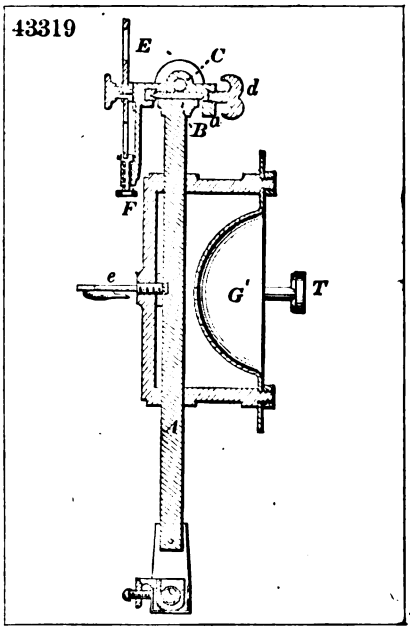

43320

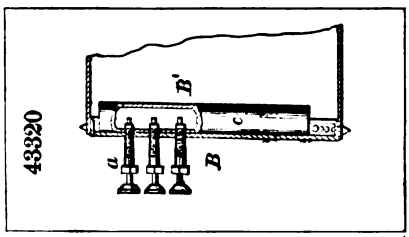

43322

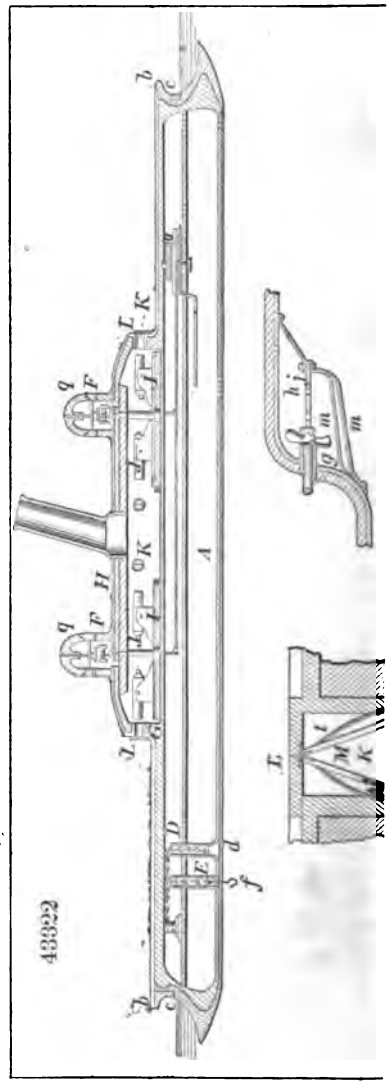

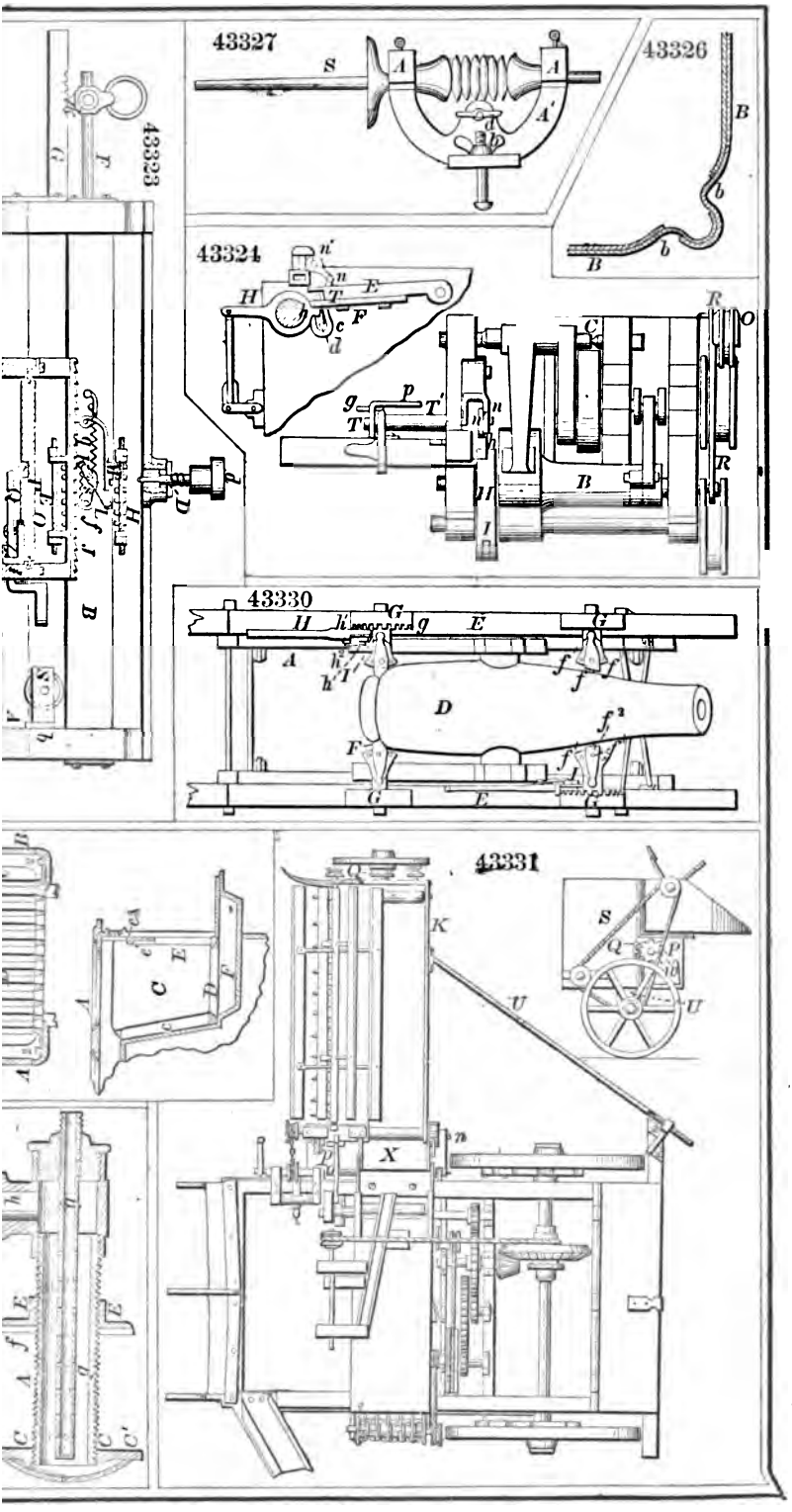
43327
43326
43328
43324
43330
43331

43332

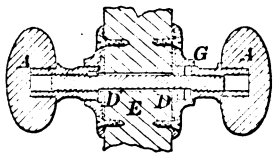

43336

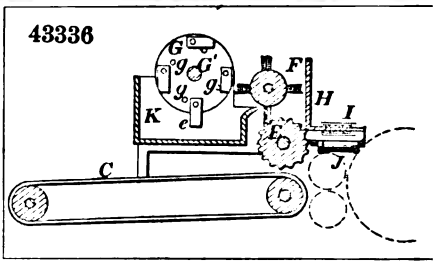

43334

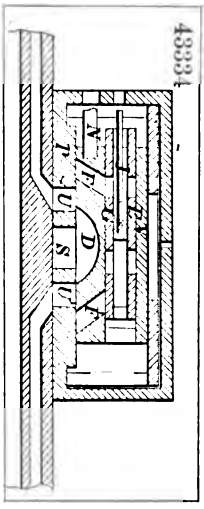

43333

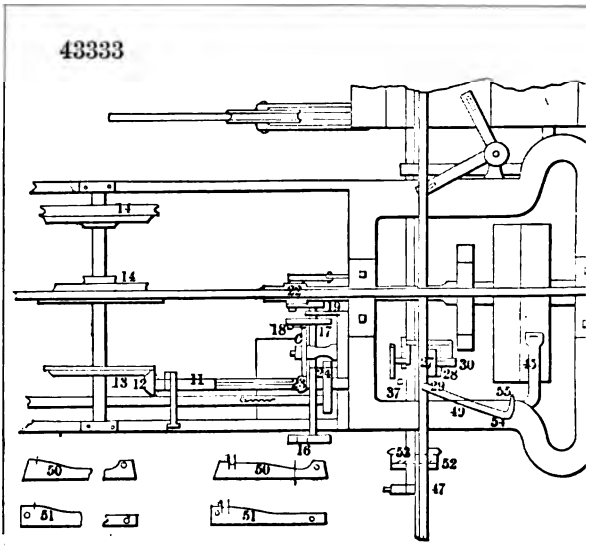

43335

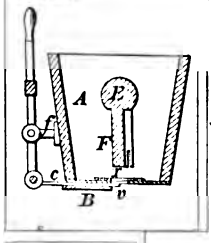

43337

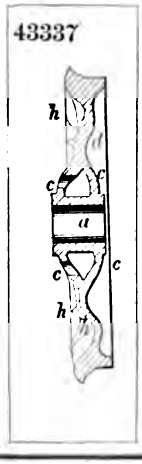

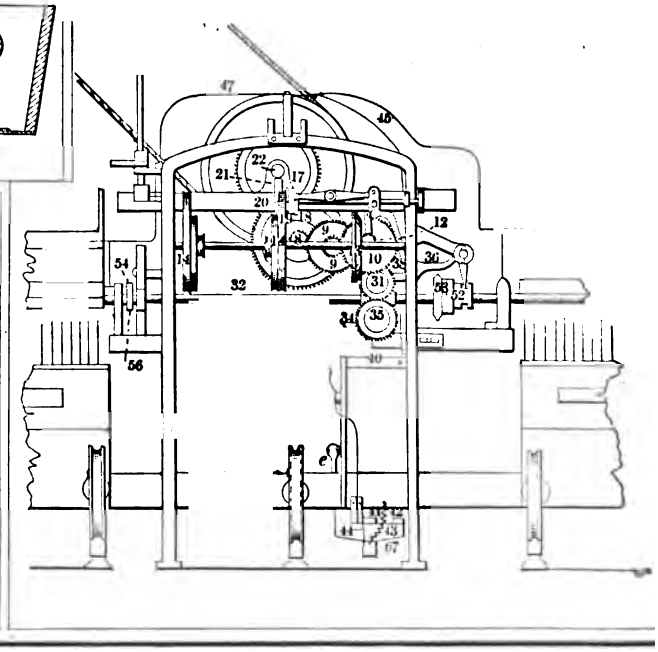

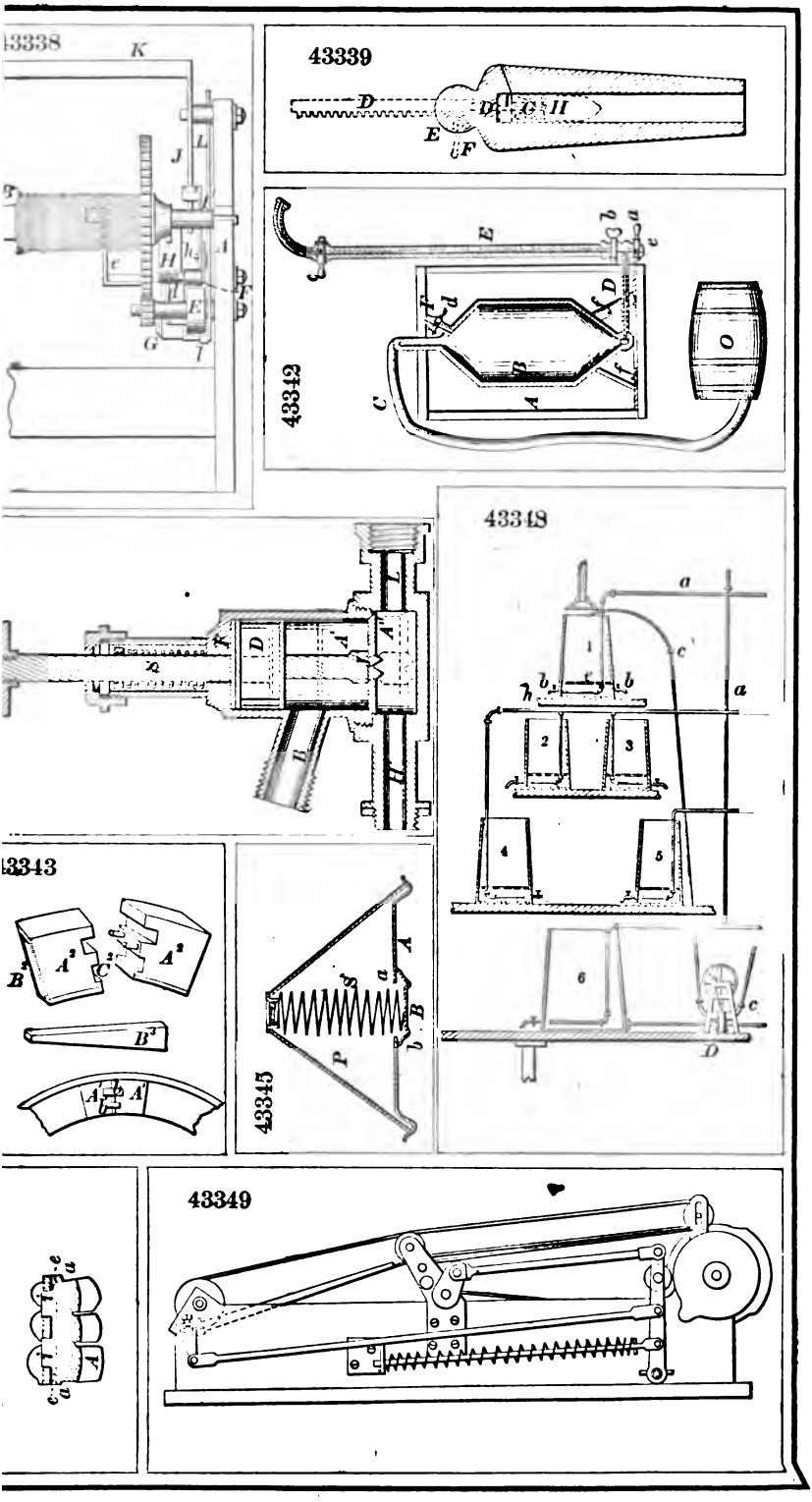
43338
43339
43342
43343
43345
43348
43349

43350

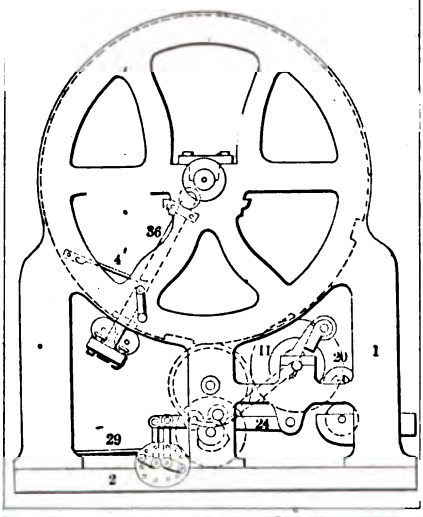

43351

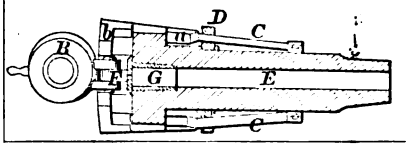

43353

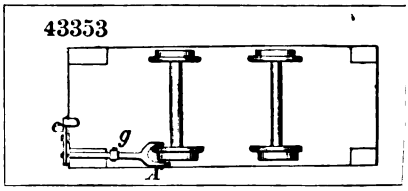

43355

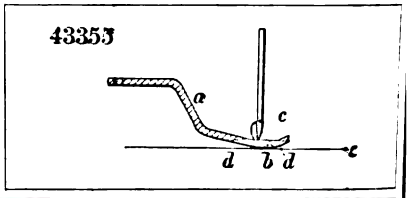

43352

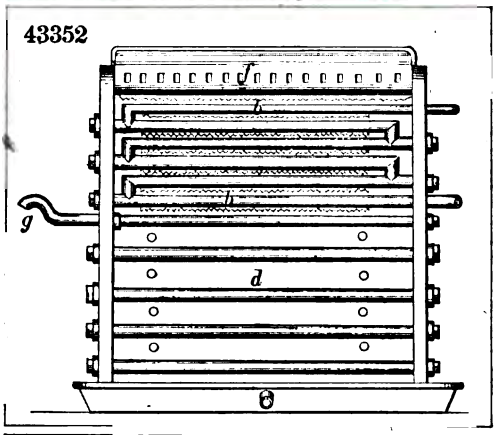

43357

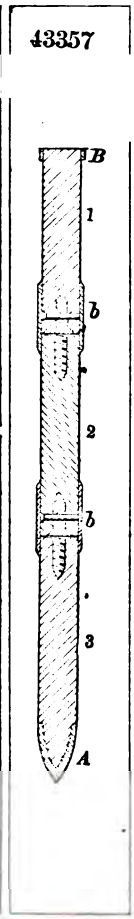

43356

43354

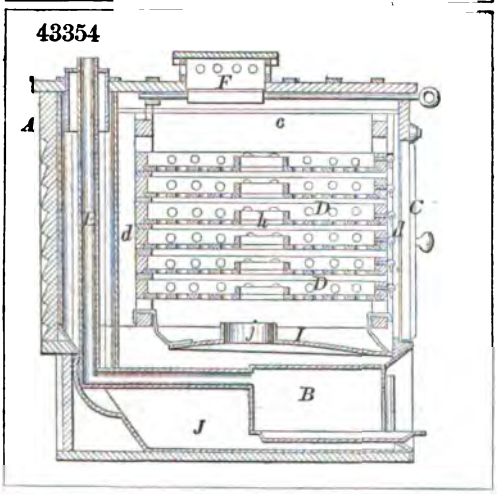

43358

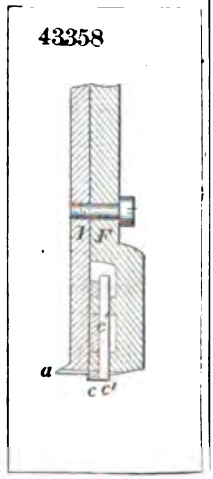

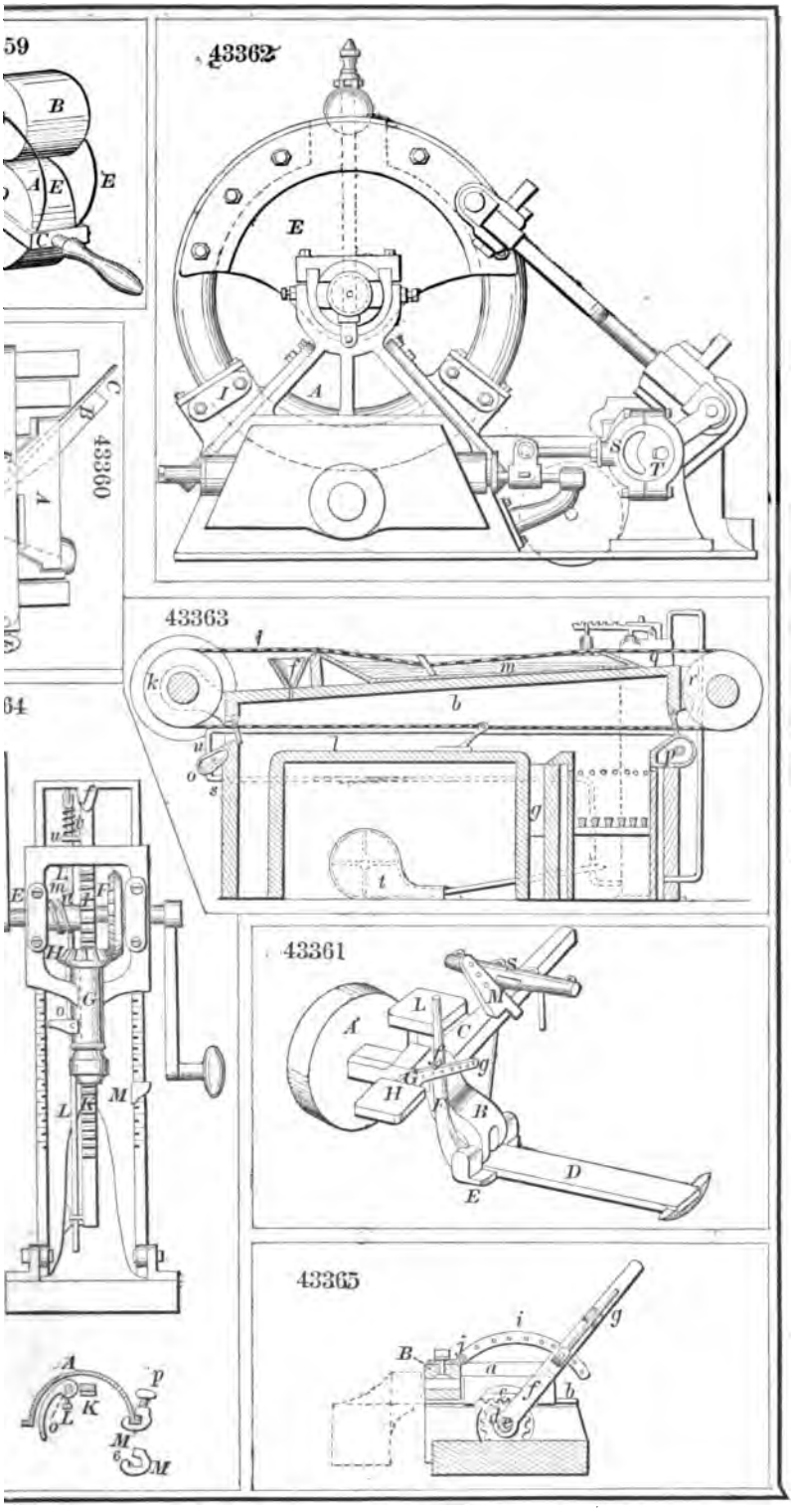
59
43362
43360
43363
64
43361
43365

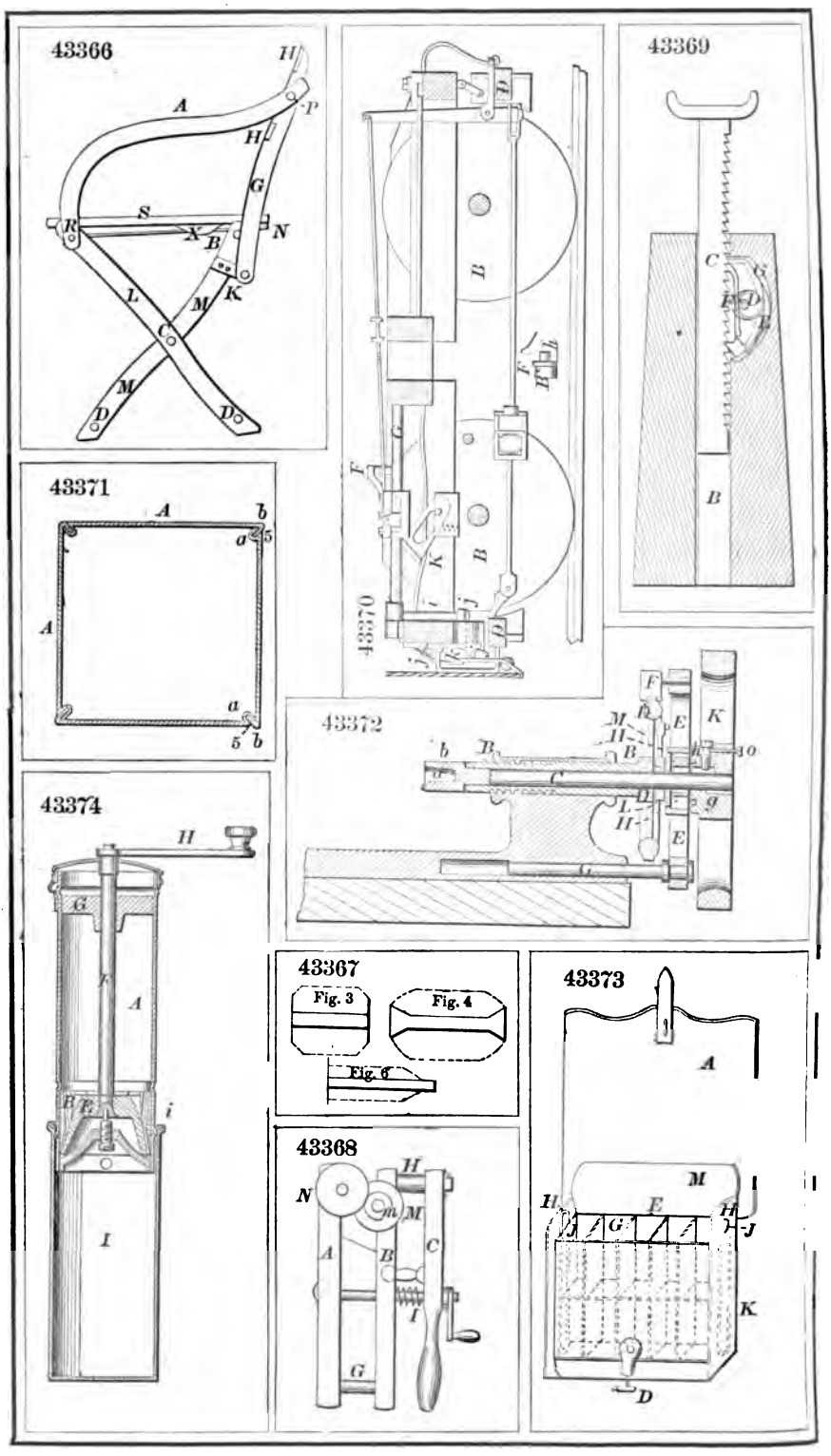
43366
43369
43371
43370
43372
43374
43367
Fig. 3
Fig. 4
Fig. 6
43373
43368

43375

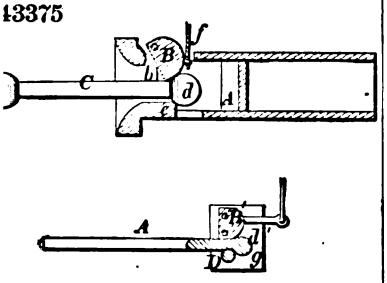

43377

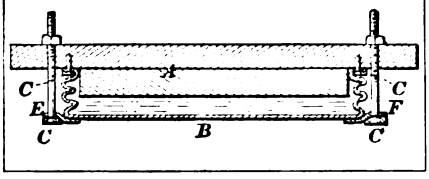

43381

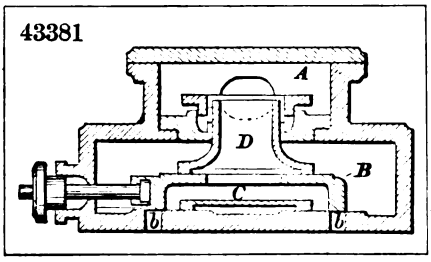

43378

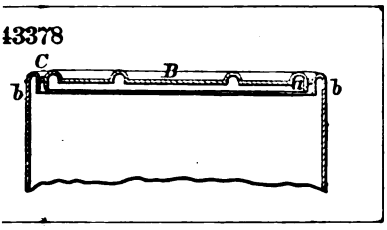

43370

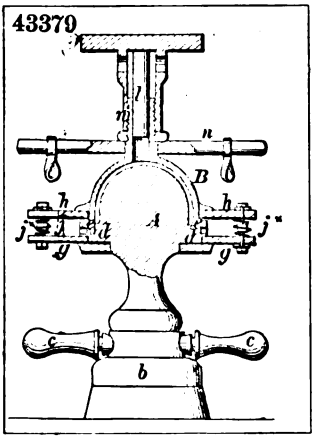

43382

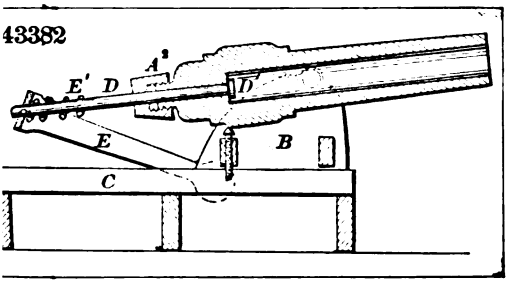

43380

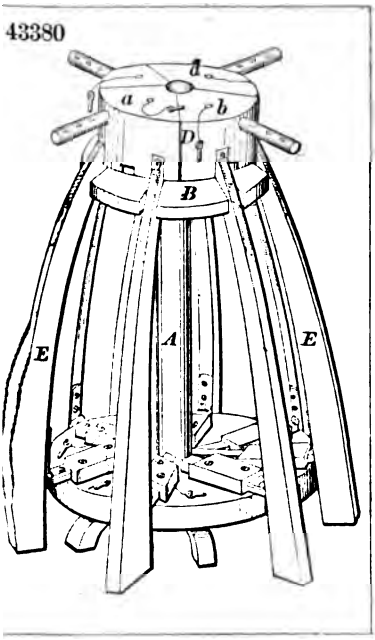

43383

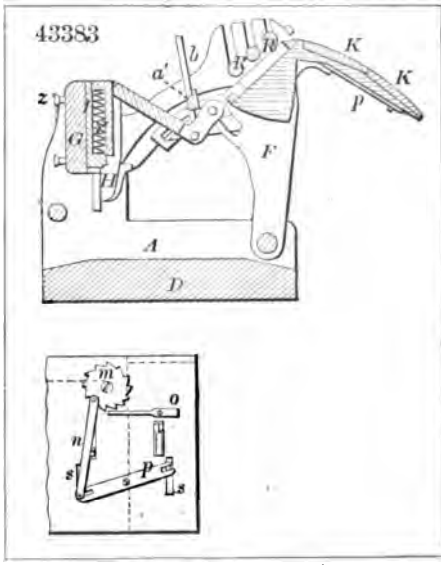

43384

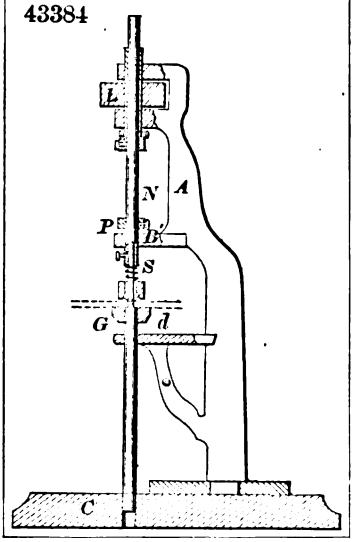

43386

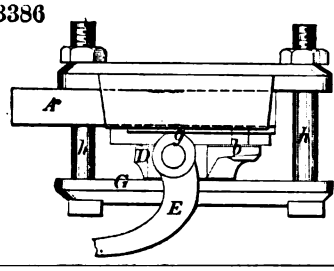

43388

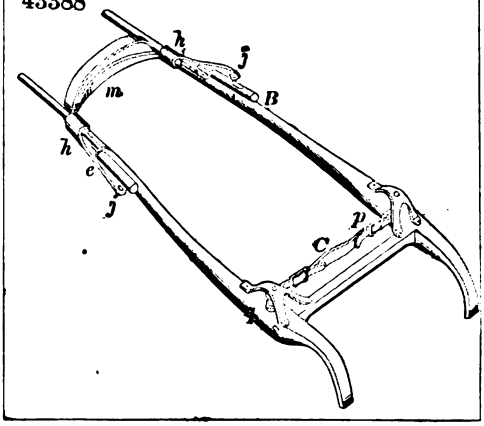

43387

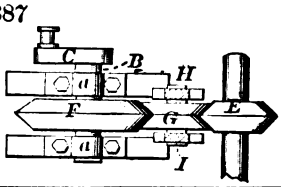

43391

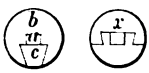

43389

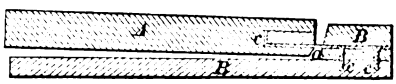

43392

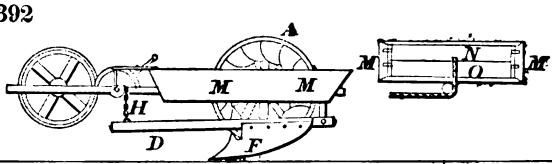

43390

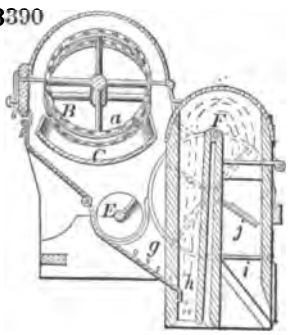

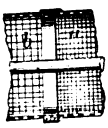

43394

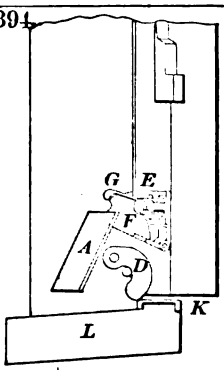

43395

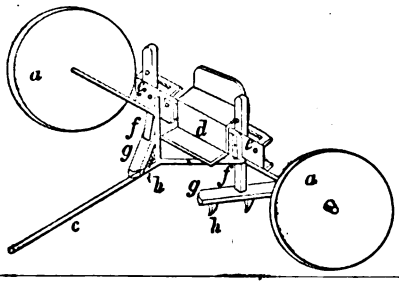

43397

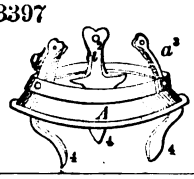

43398

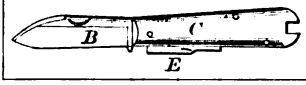

43396

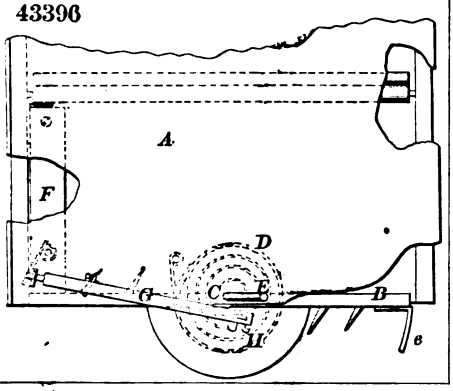

43399

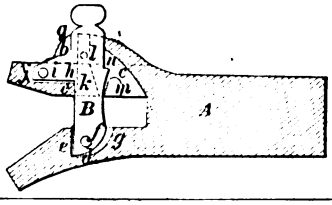

43401

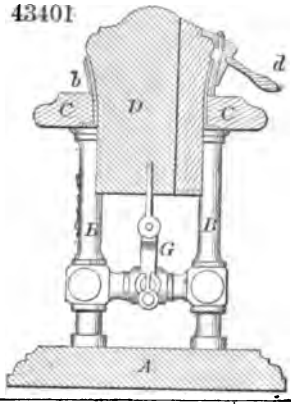

43400

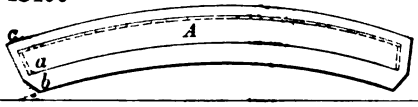

43402

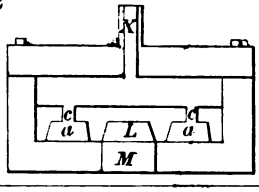

43405

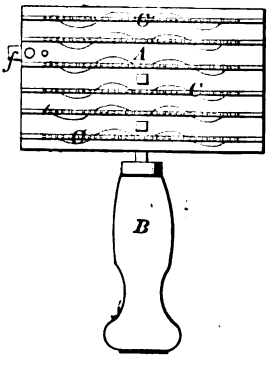

43404

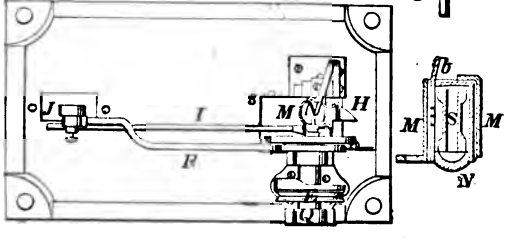

43406

43407

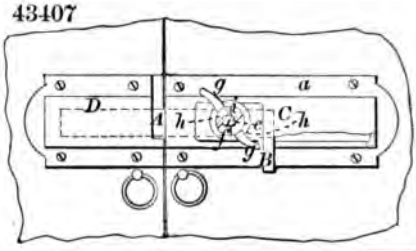

43408

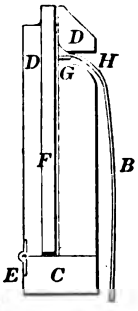

43409

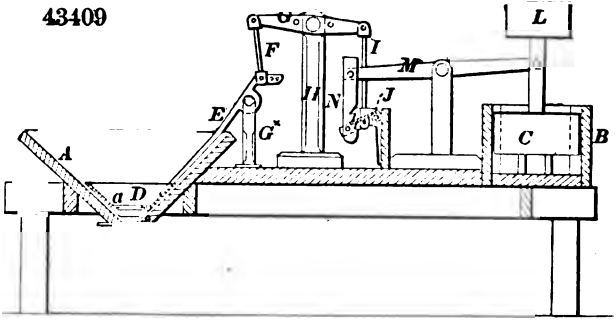

43410

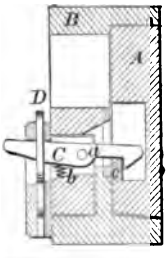

43411

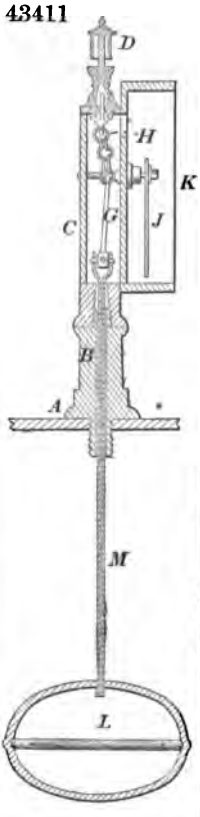

43412

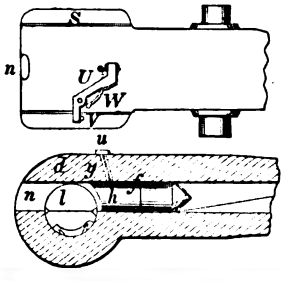

43413

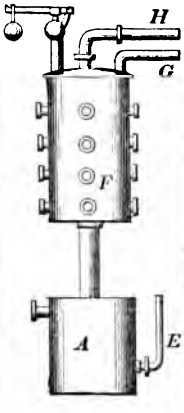

43414

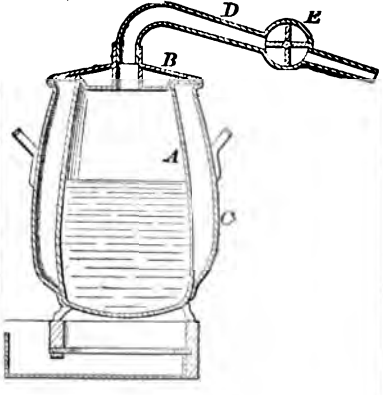

43415

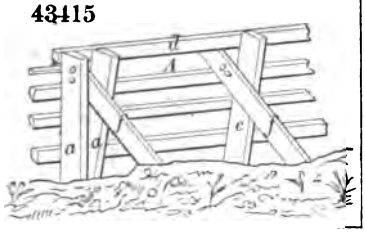

43416

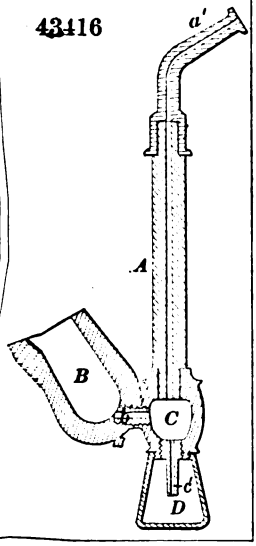

43417

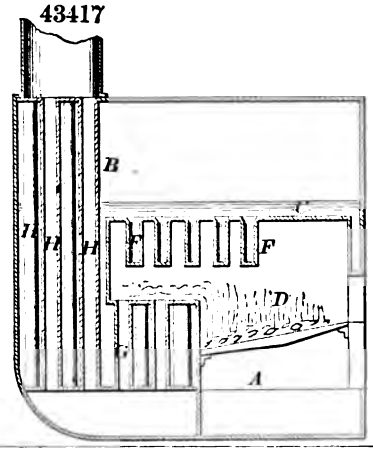

43418

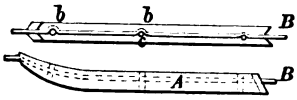

43419

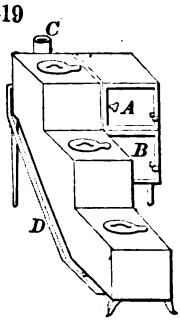

43420

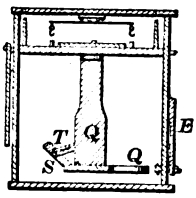

43422

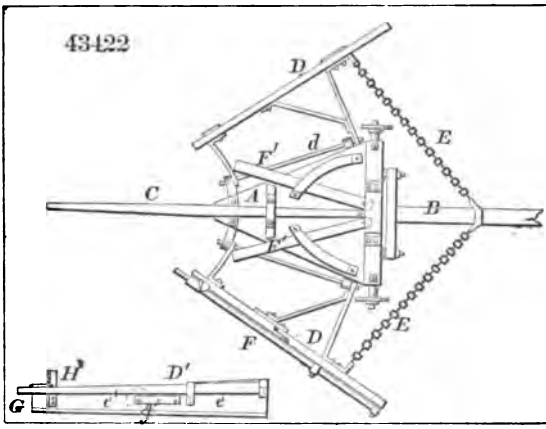

43423

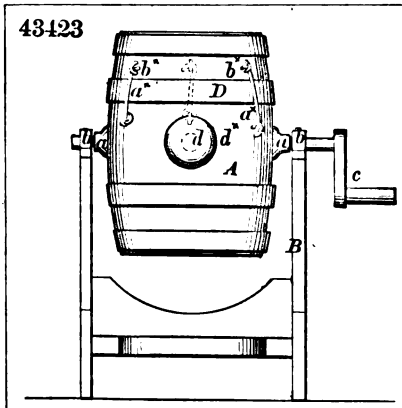

43424

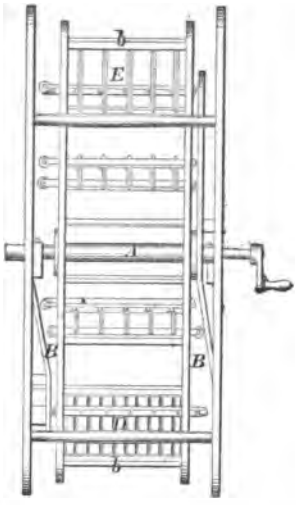

43425

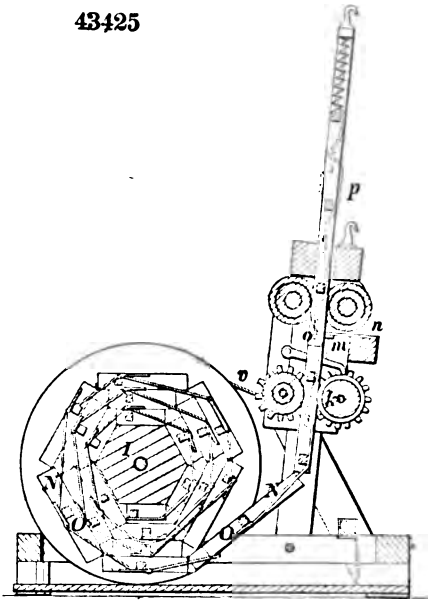

43426

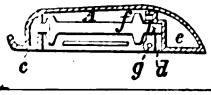

43427

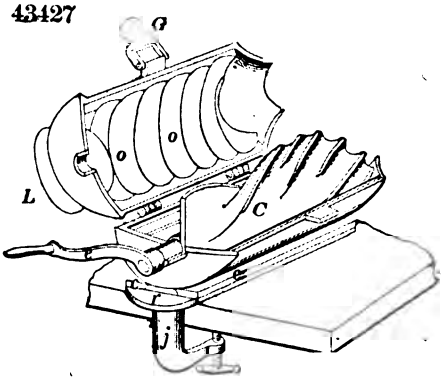

43428

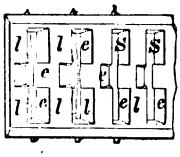

43429

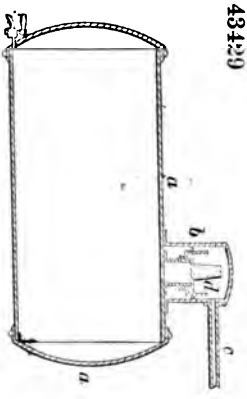

43430

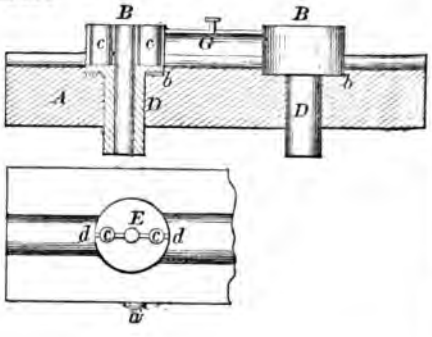

43431

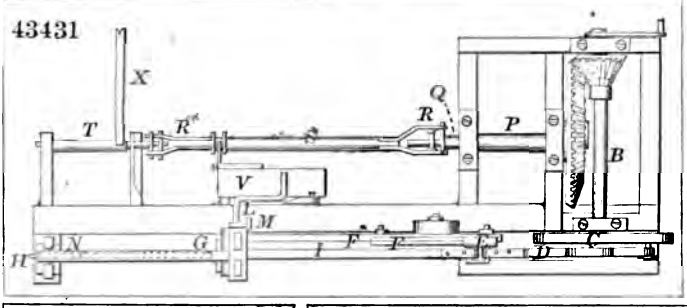

43439

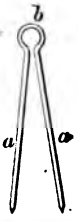

43434

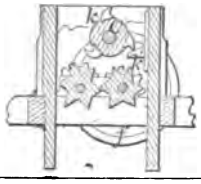

43438

43432

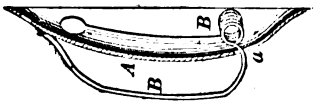

43437

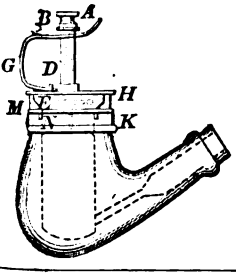

43440

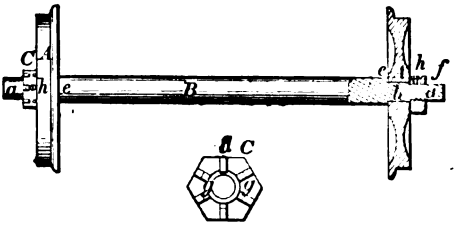

43436

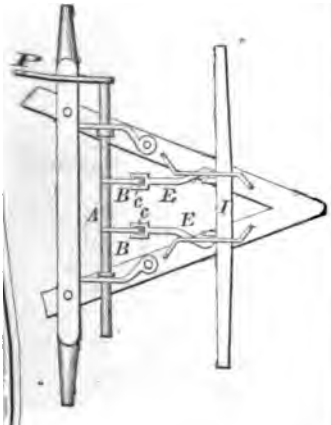

43435

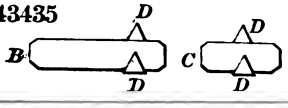

43441

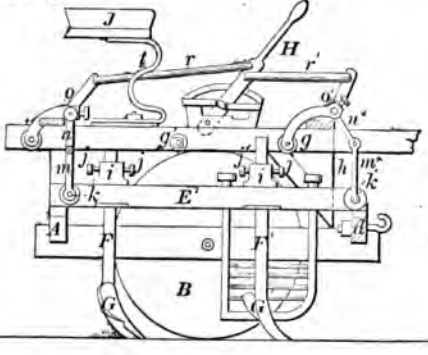

43442

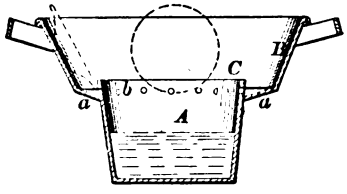

43446

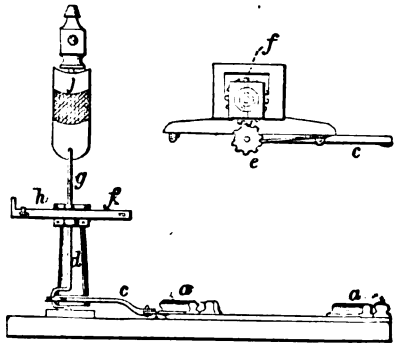

43445

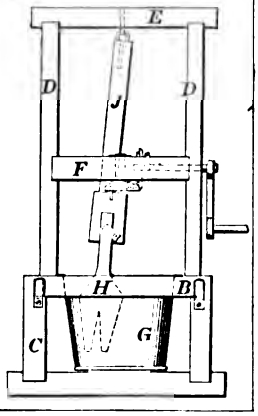

43447

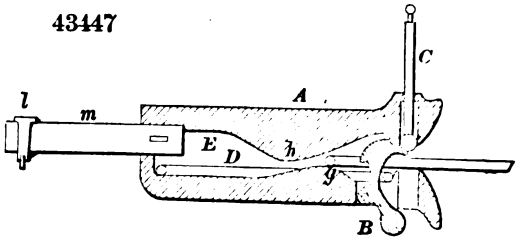

43448

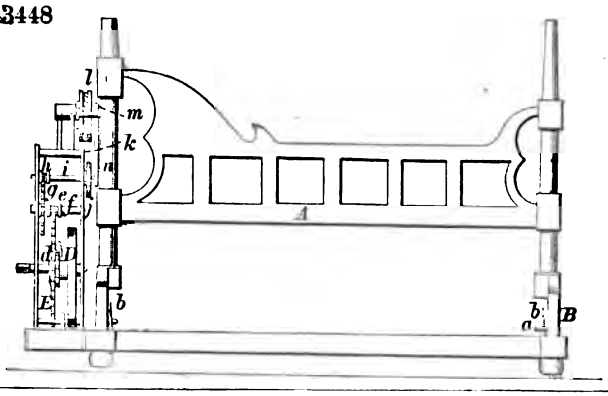

43449

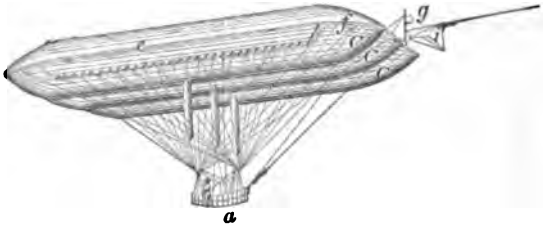

43450

43451

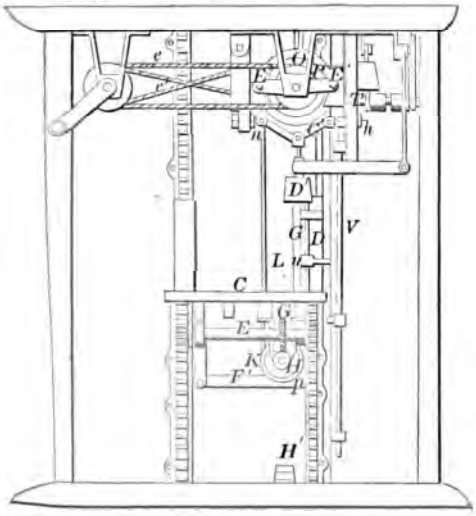

43453

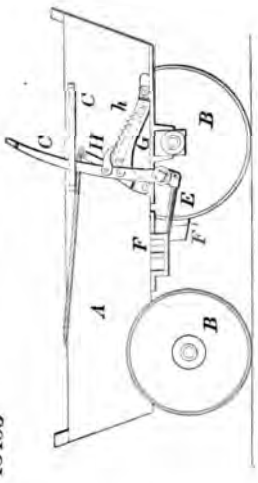

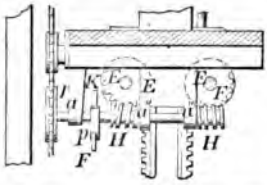

43452

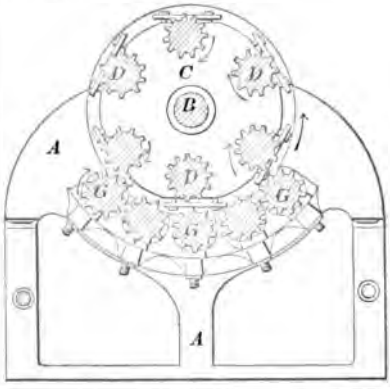

43454

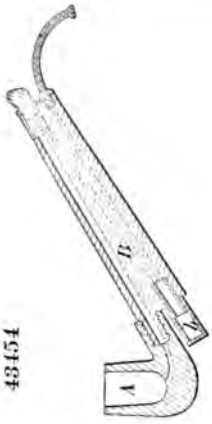

43455

43456

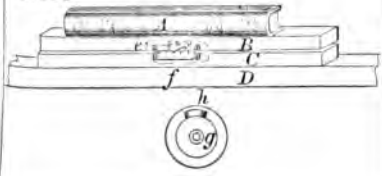

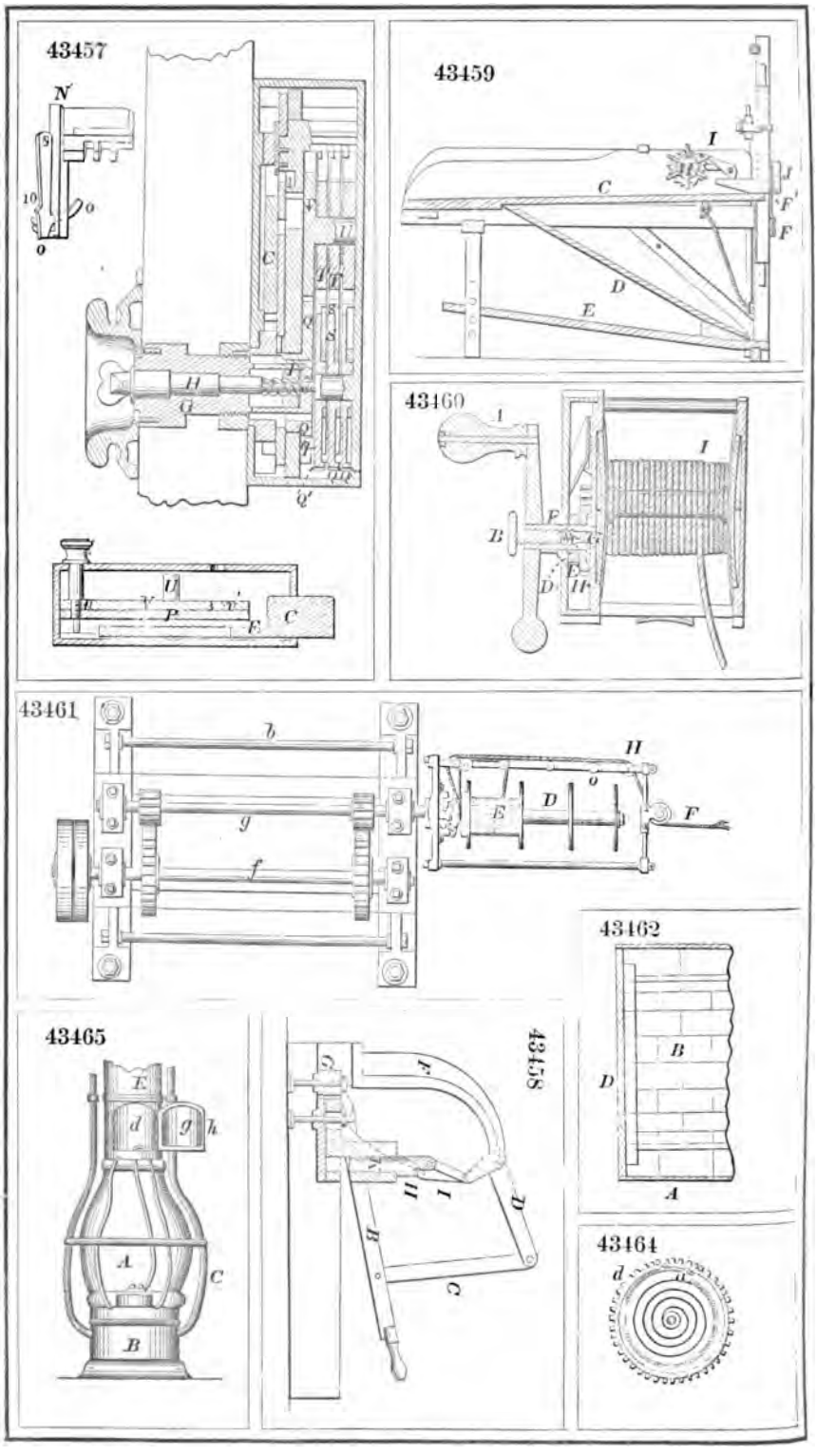
43457
43459
43460
43461
43462
43464
43465
43458

43466

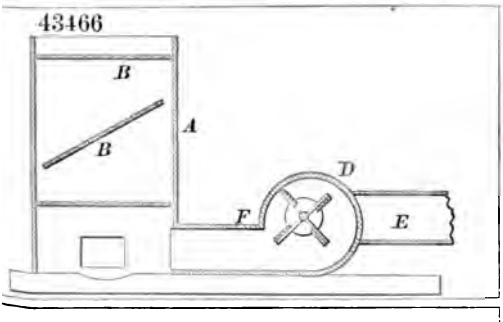

43467

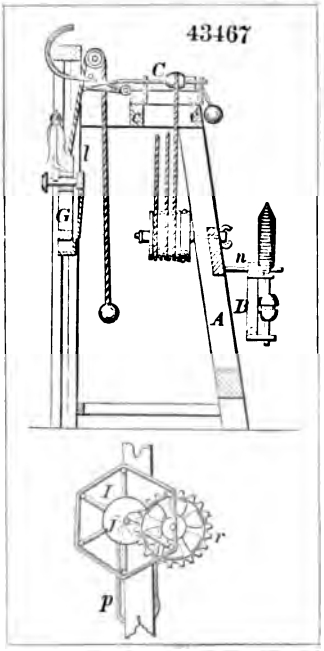

43470

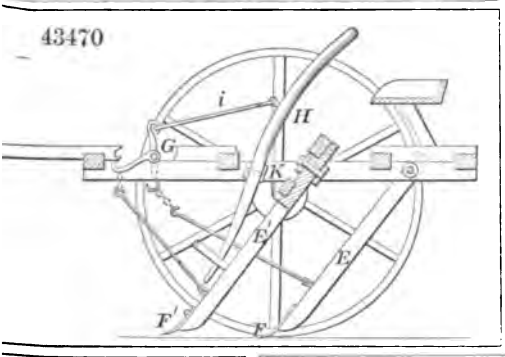

43468

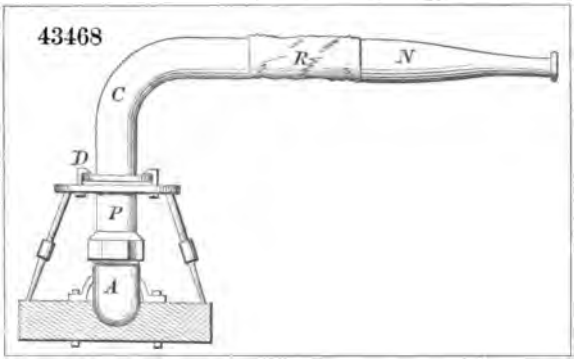

43471

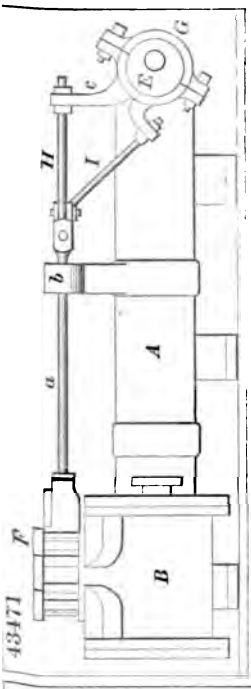

43472

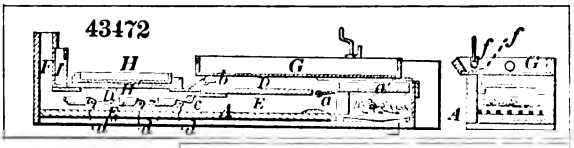

43473

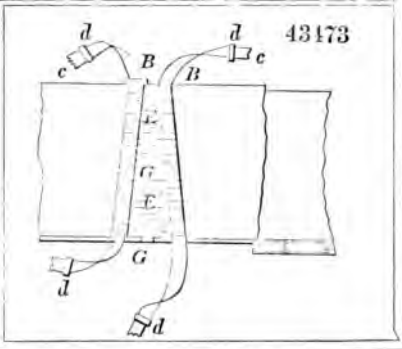

43469

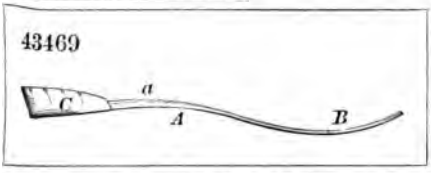

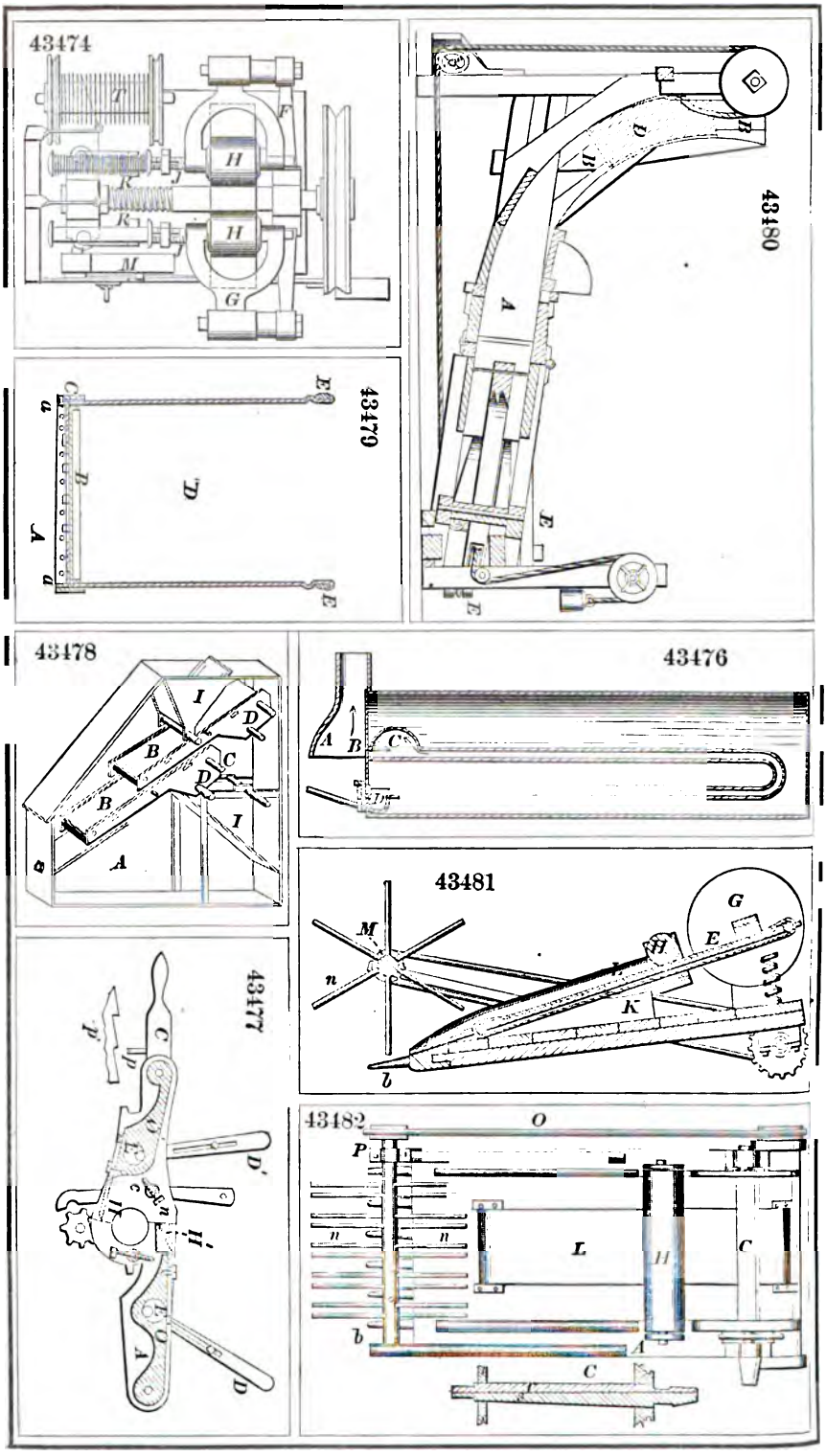
43474
43480
43479
43476
43478
43481
43477
43482

43483

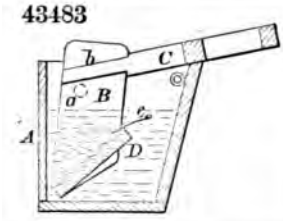

43487

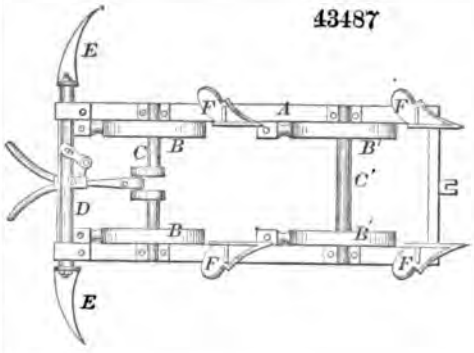

43484

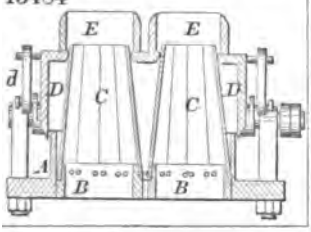

43488

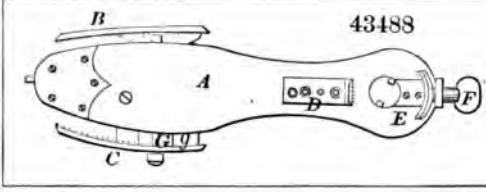

43490

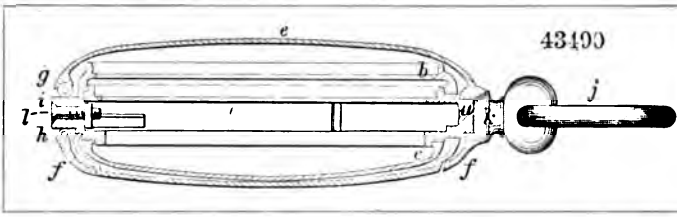

43485

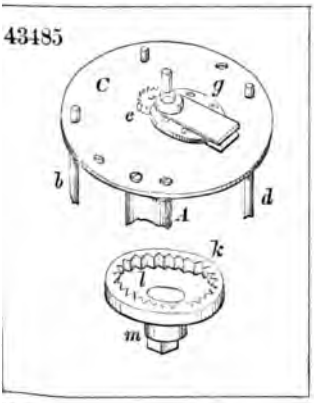

43492

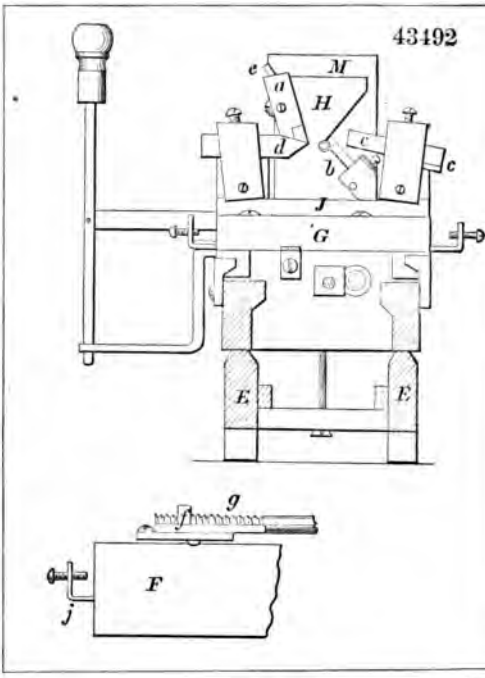

43486

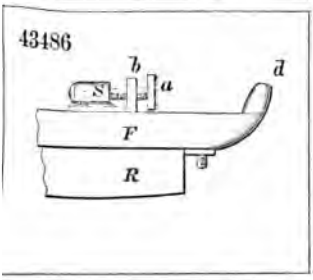

43493

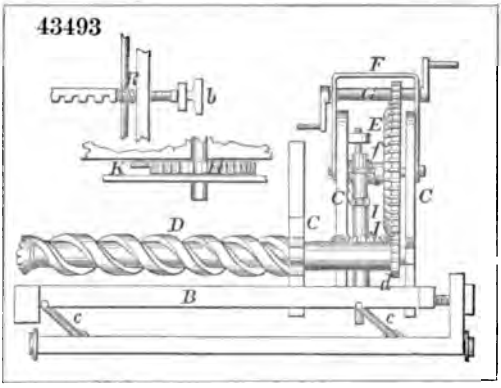

43496

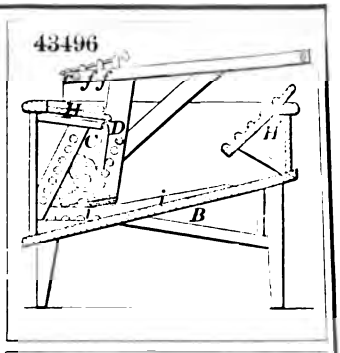

43494

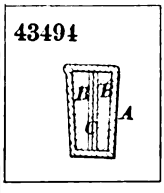

43495

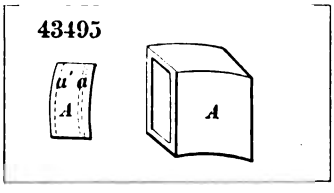

43498

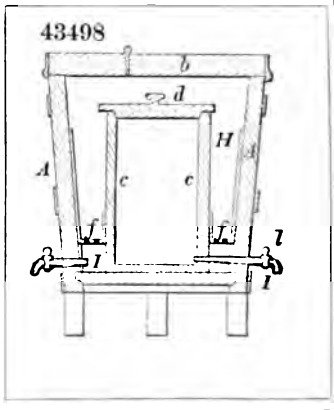

43497

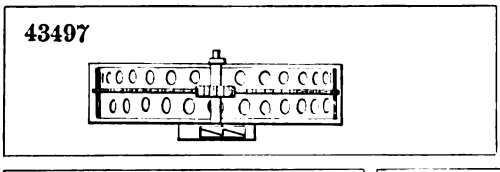

43499

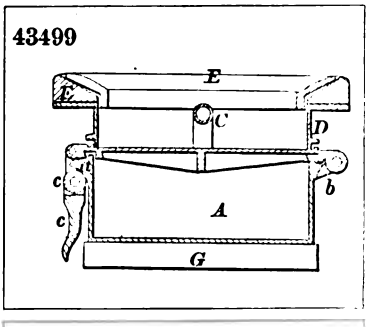

43500

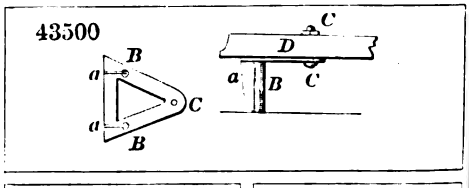

43502

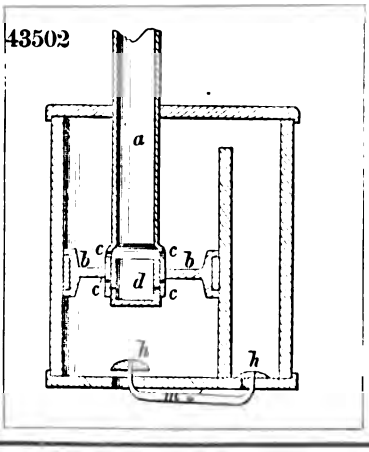

43501

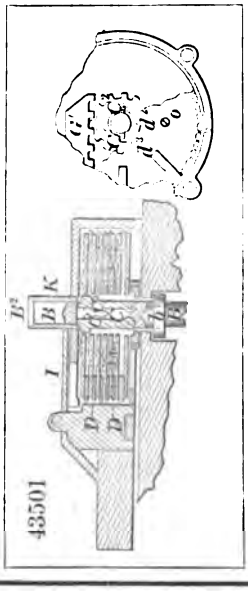

43503

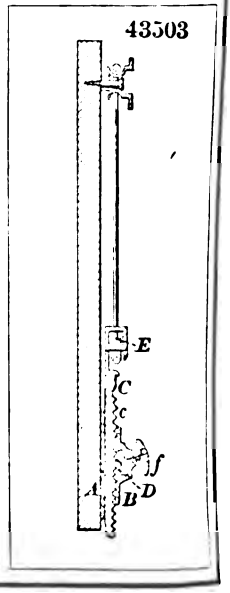

43504

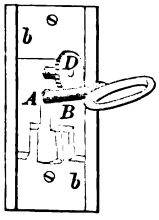

43510

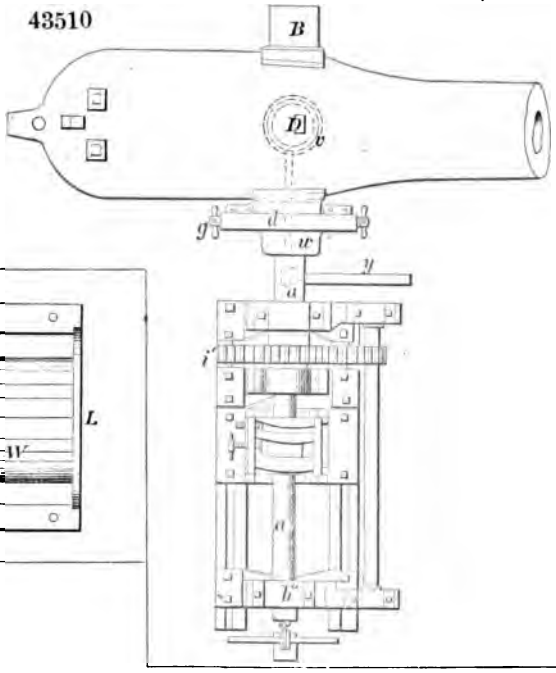

43507

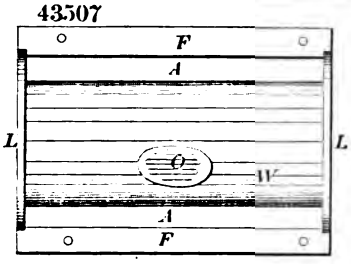

43505

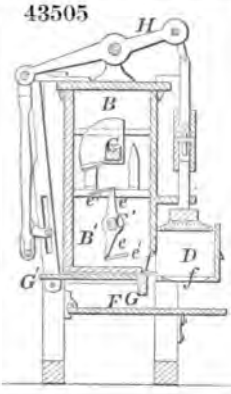

43511

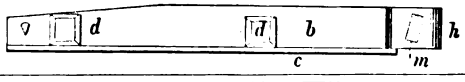

43512

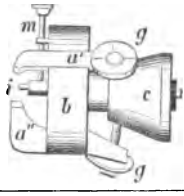

43513

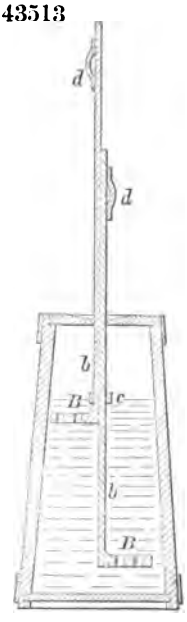

43508

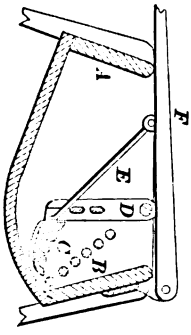

43509

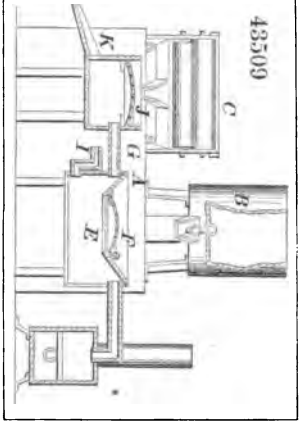

43514

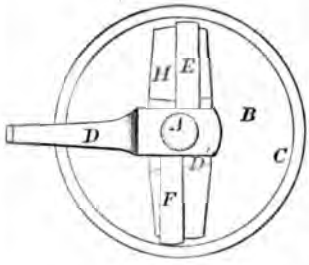

43516

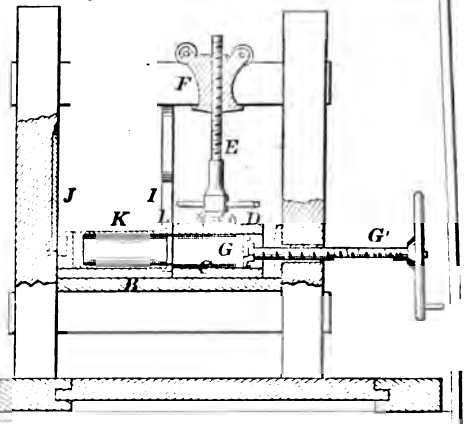

43518

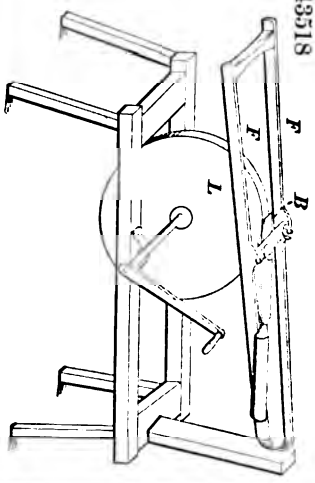

43515

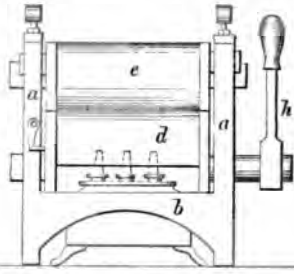

43519

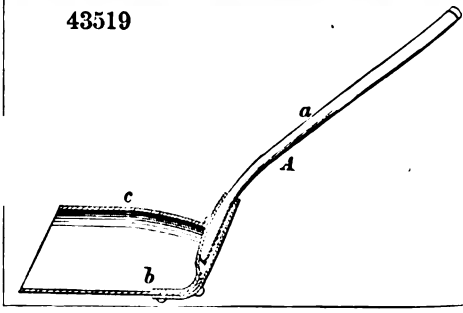

43517

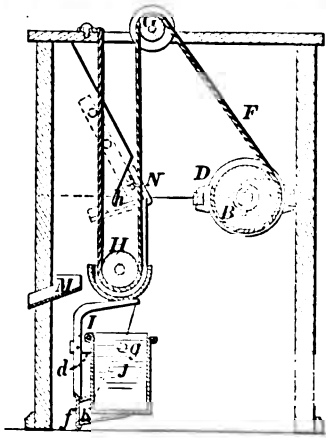

43520

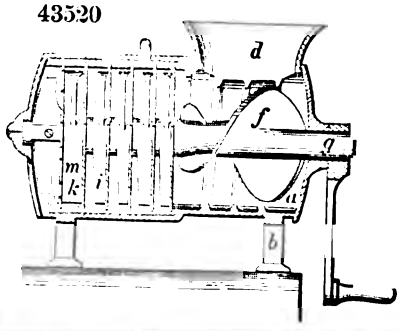

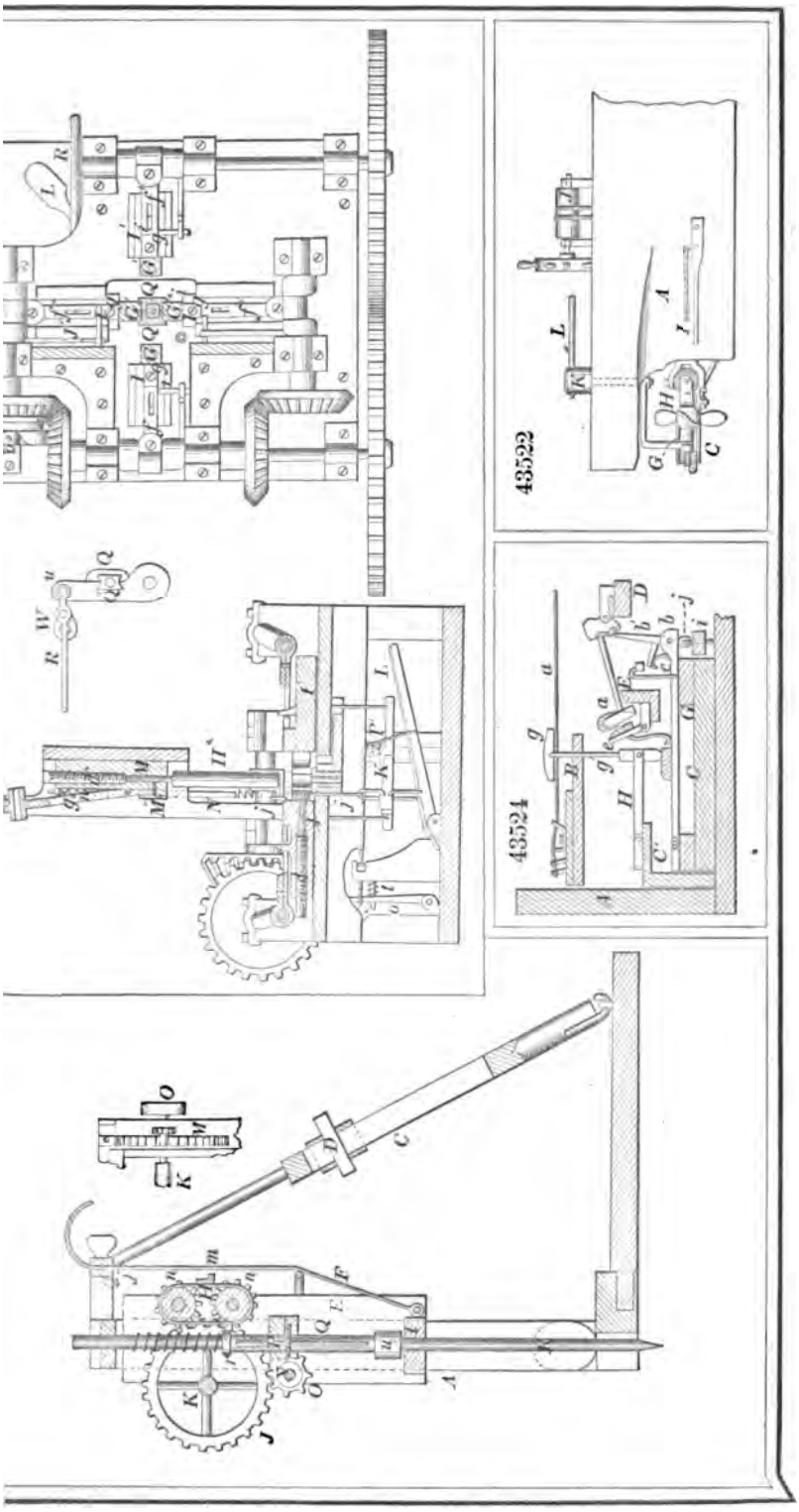
43522
43524

43525

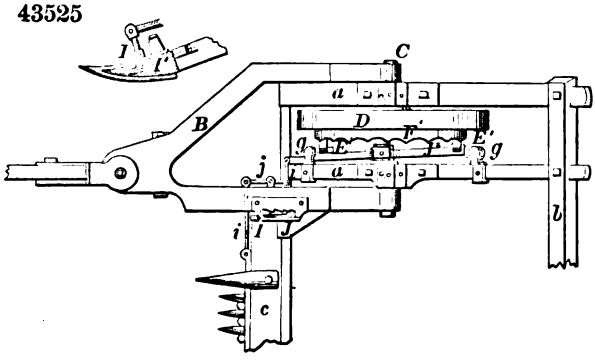

43526

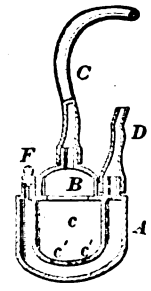

43528

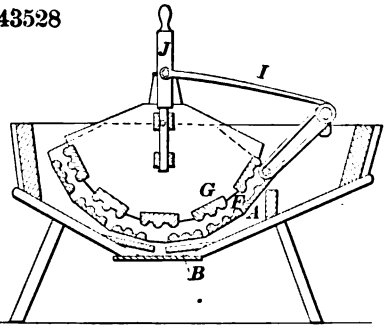

43531

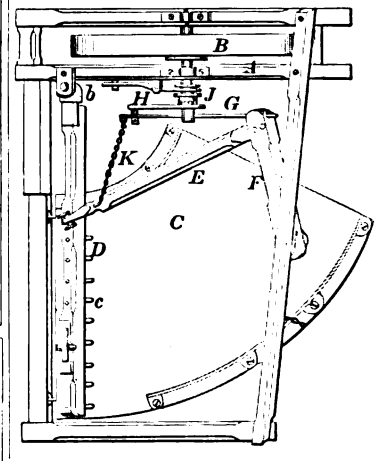

43529

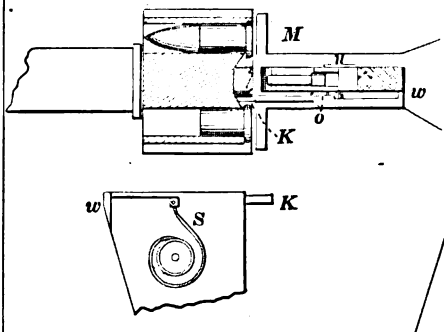

43532

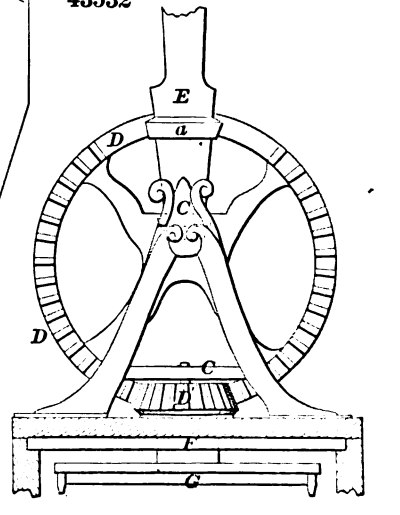

43530

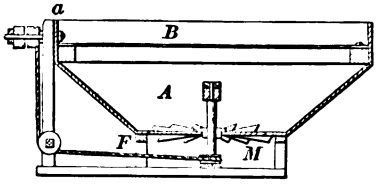

43533

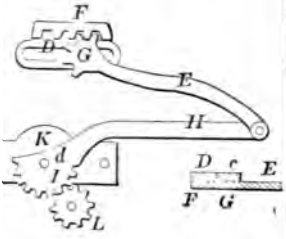

43537

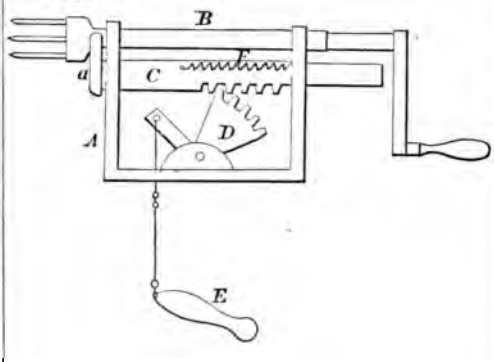

43535

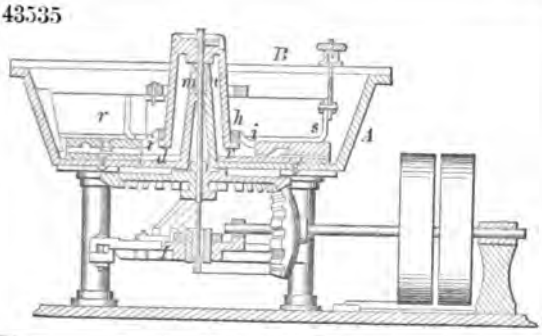

43536

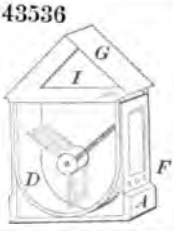

43540

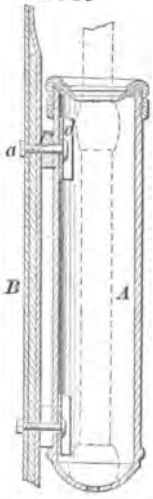

43538

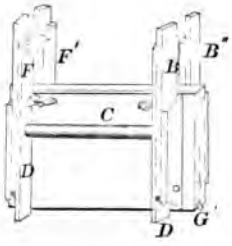

43541

43539

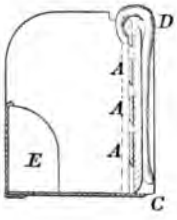

43542

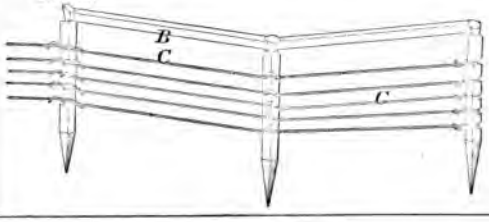

43543

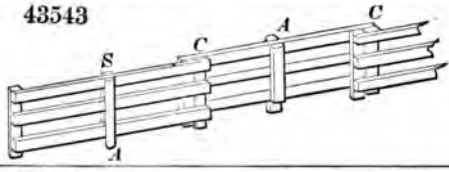

43544

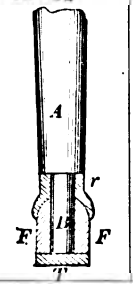

43549

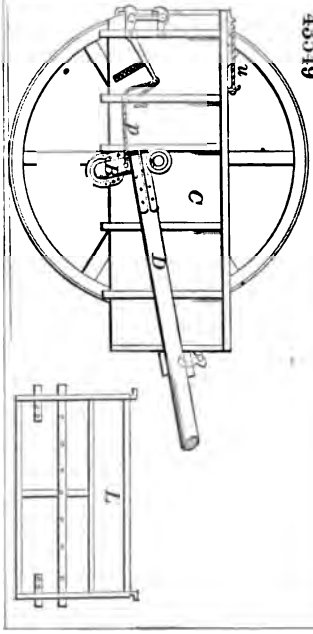

43546

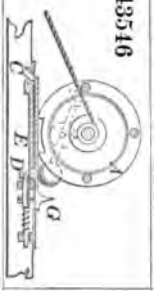

43545

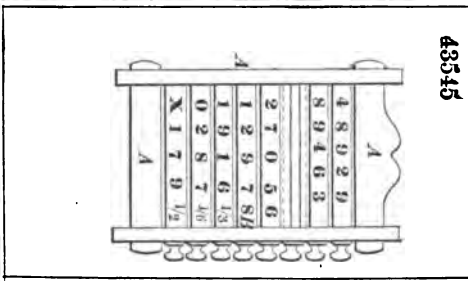

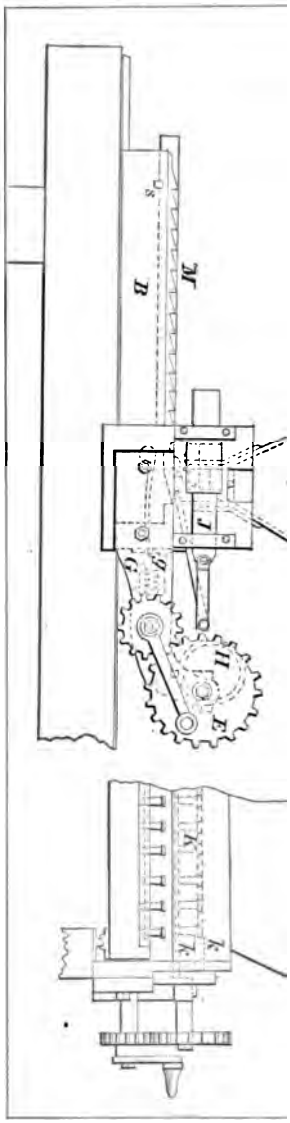

43551

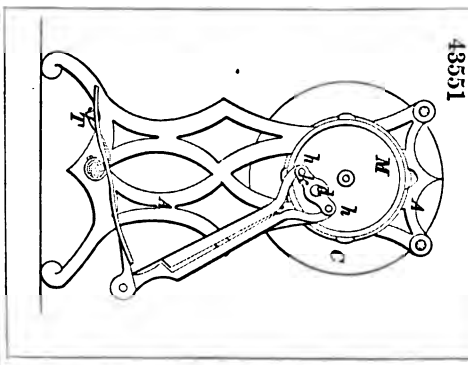

43553

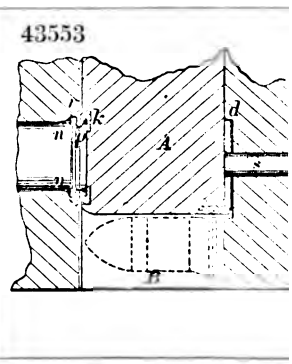

43554

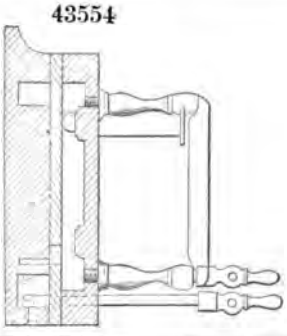

43556

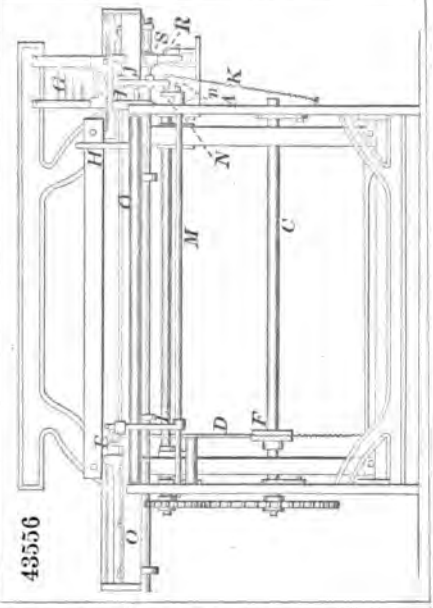

43558

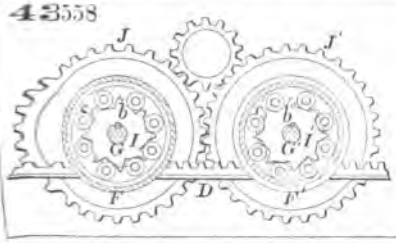

43559

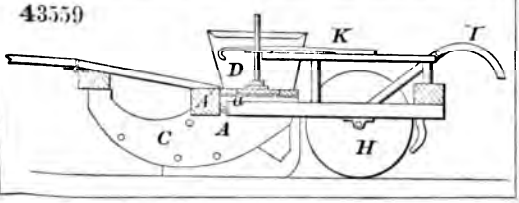

43564

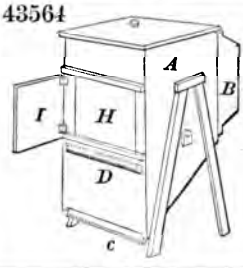

43561

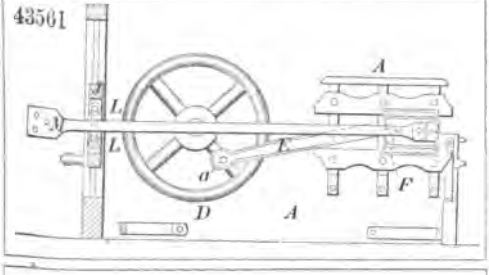

43560

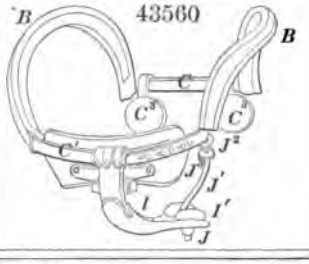

43565

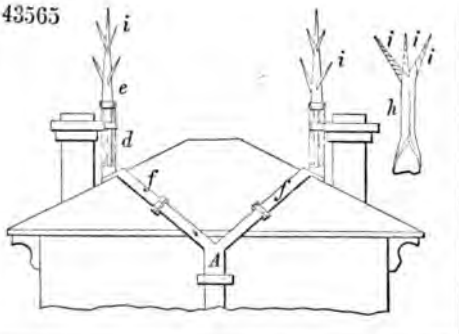

43566

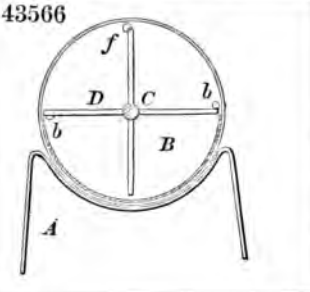

43567

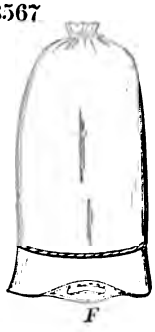

43568

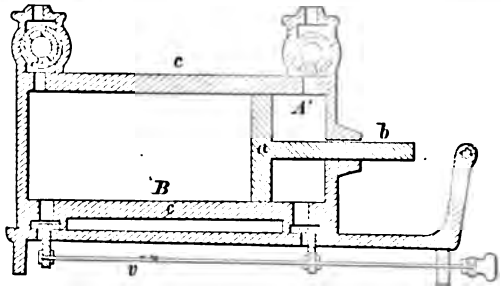

43569

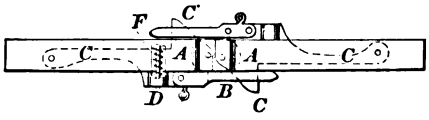

43572

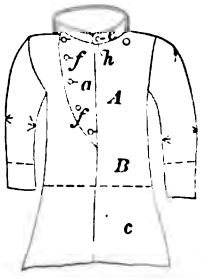

43570

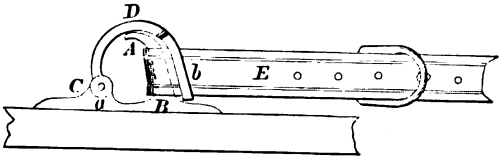

43573

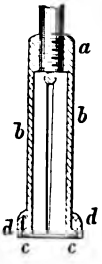

43574

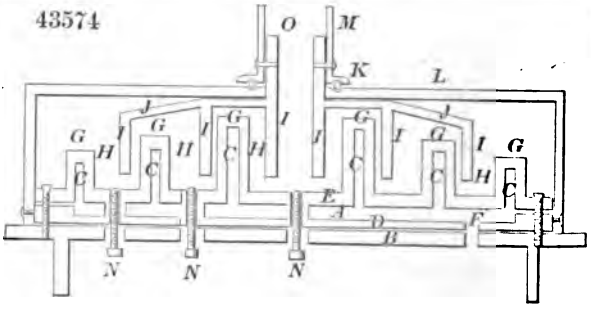

43571

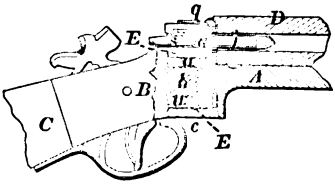

43575

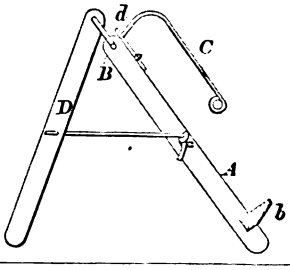

43576

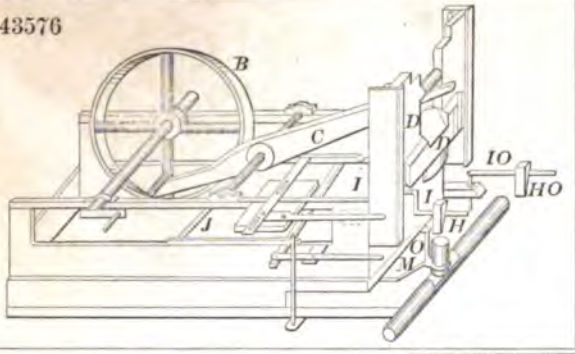

43577

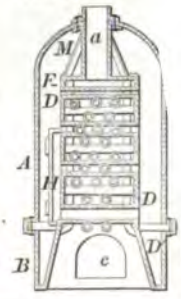

43582

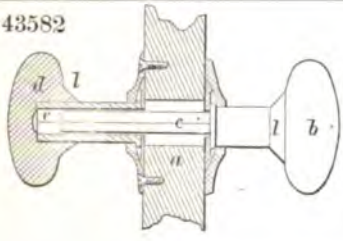

43580

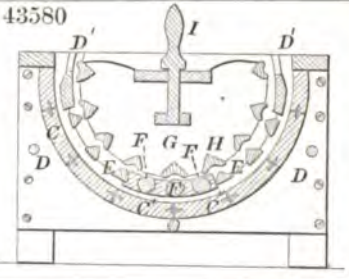

43578

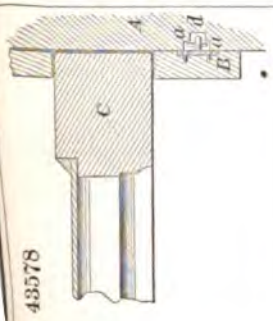

43579

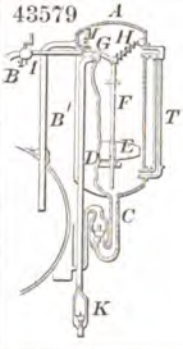

43581

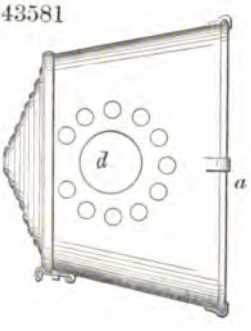

43583

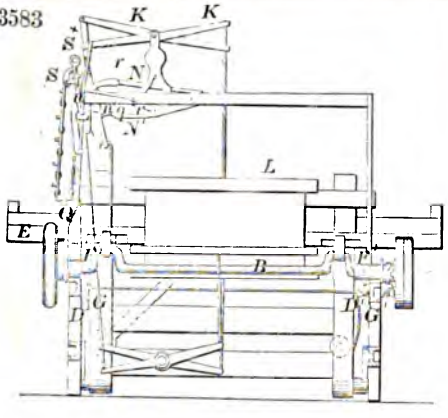

43584

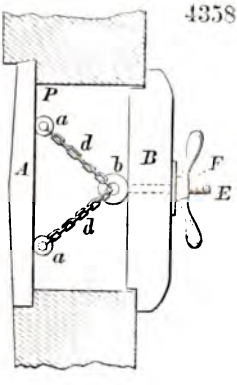

43586

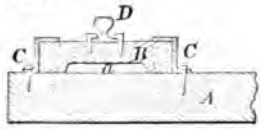

43588

43589

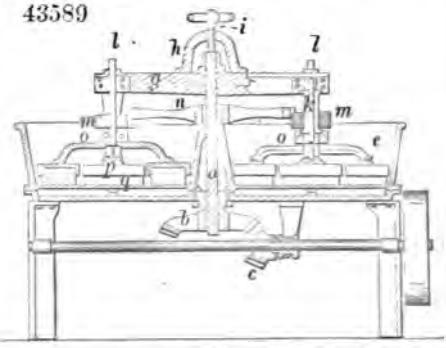

43591

43592

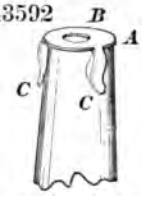

43593

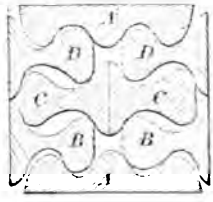

43590

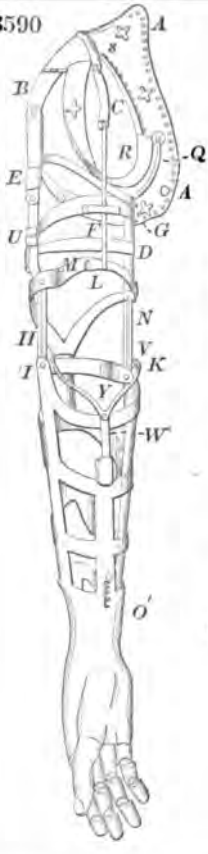

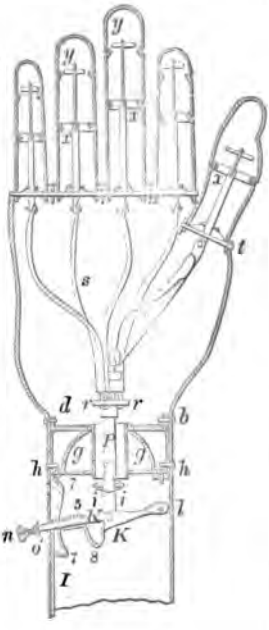

43594

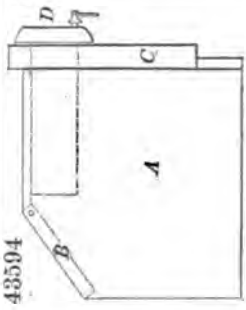

43596

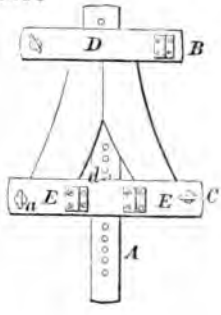

43597

43598

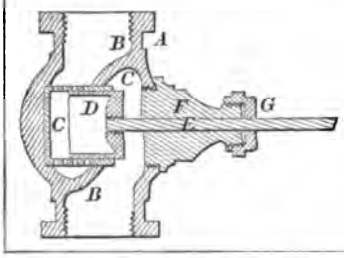

43599

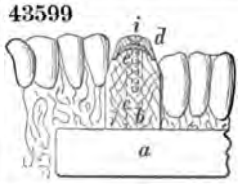

43600

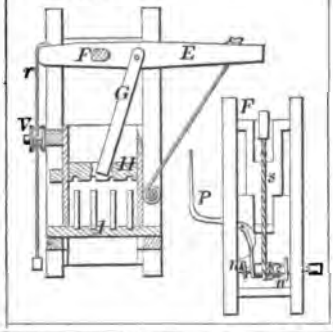

43601

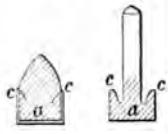

43606

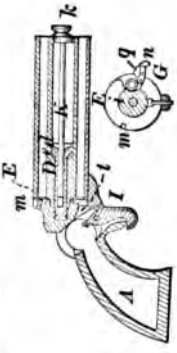

43602

43603

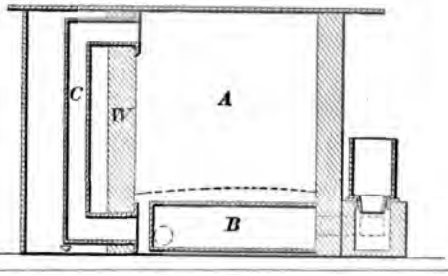

43604

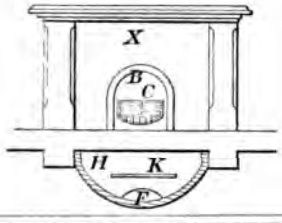

43608

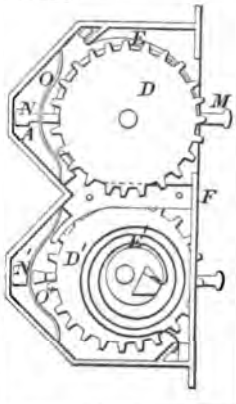

43609

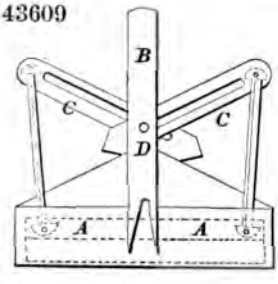

43607

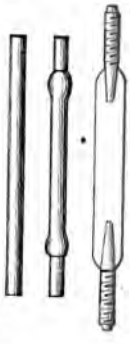

43610

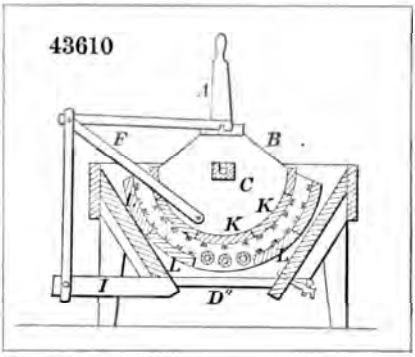

43613

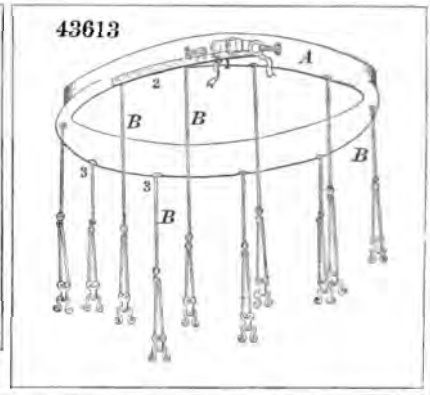

43612

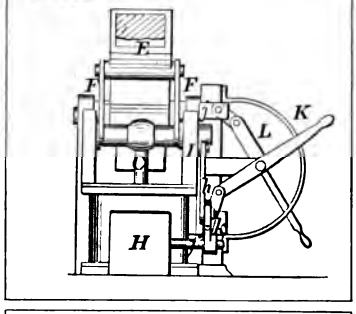

43617

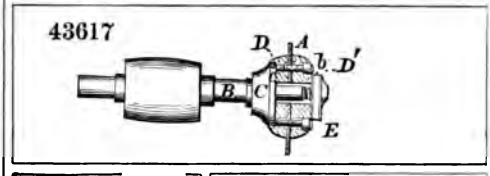

43615

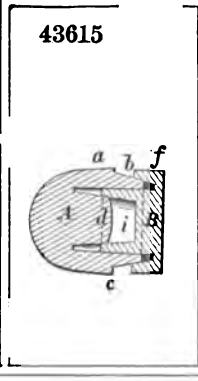

43616

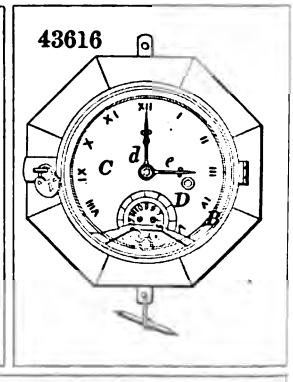

43614

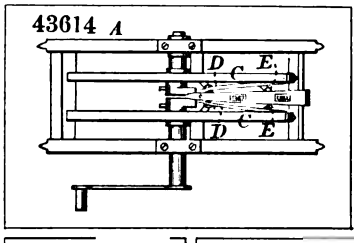

43611

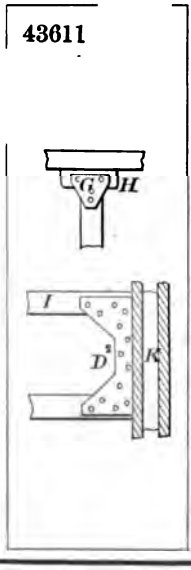

43618

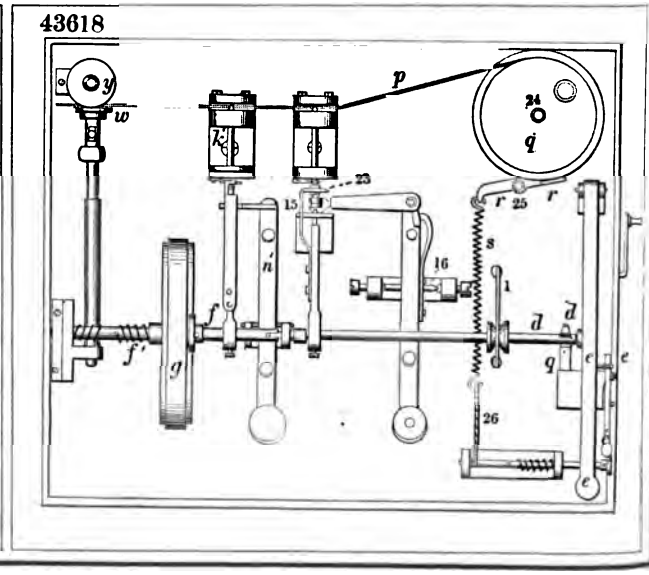

43619

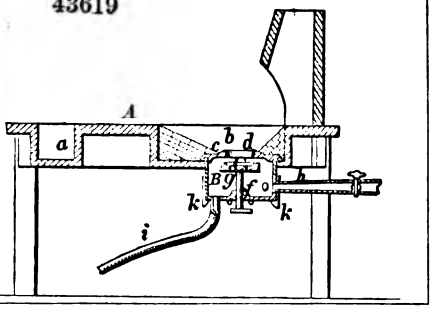

43620

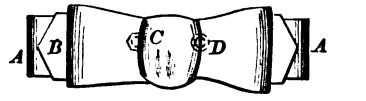

43622

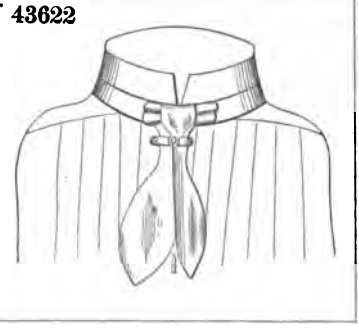

43621

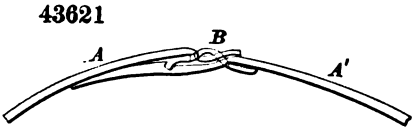

43623

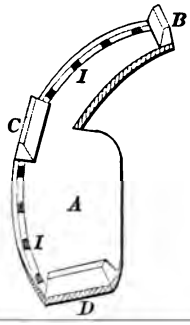

43624

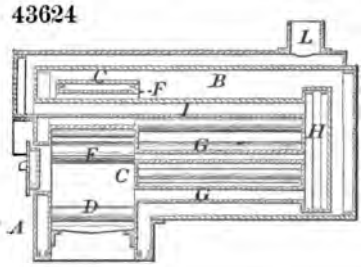

43625

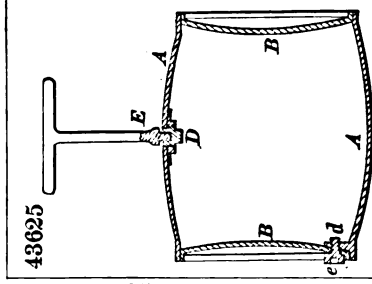

43626

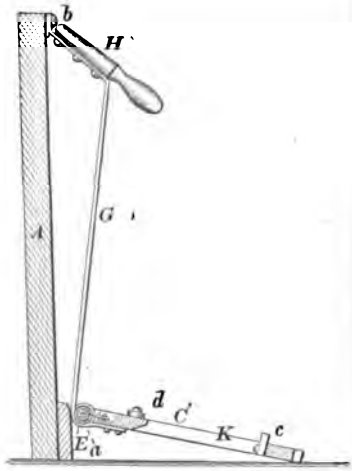

43627

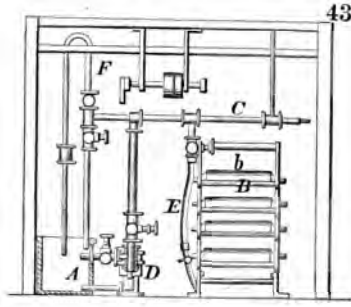

43628

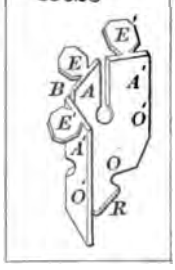

43631

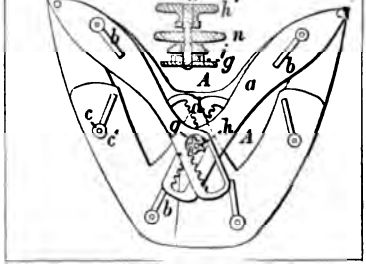

43632

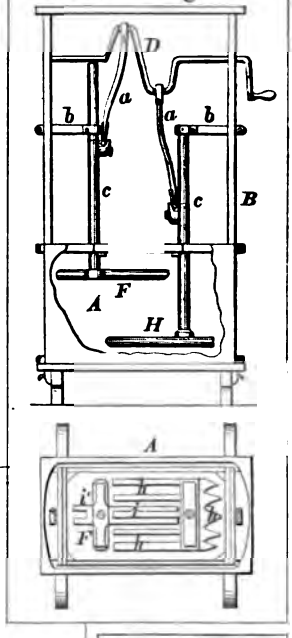

43629

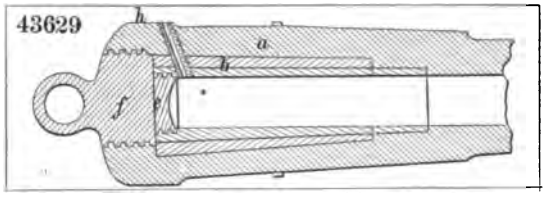

43633

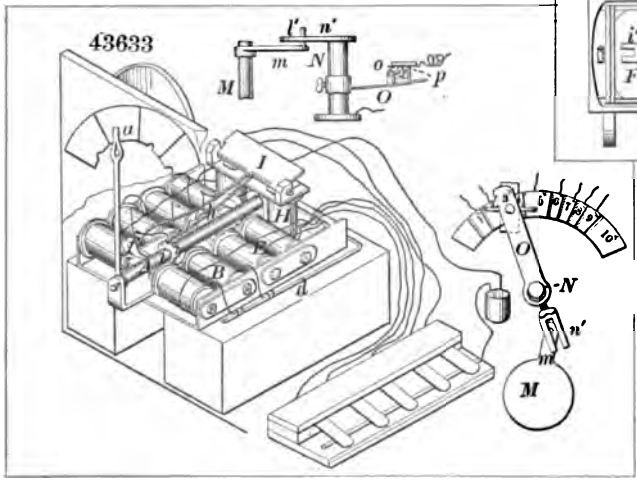

43636

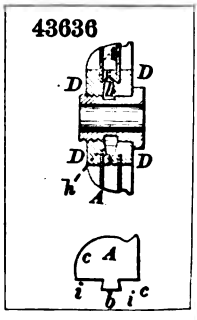

43634

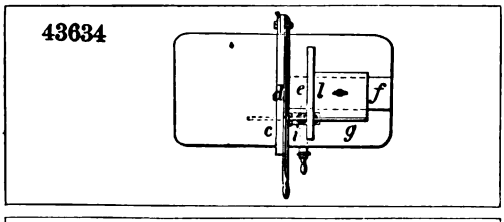

43637

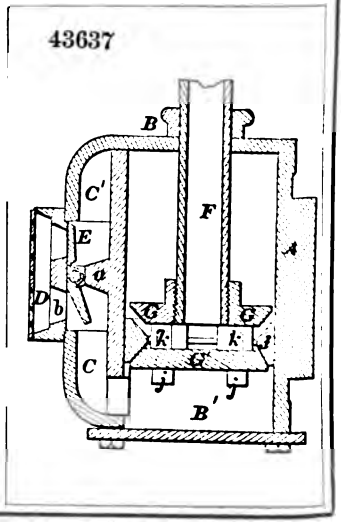

43635

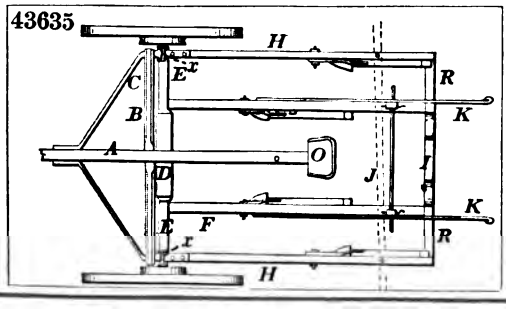

43638

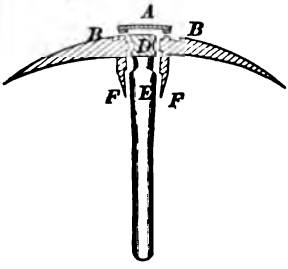

43645

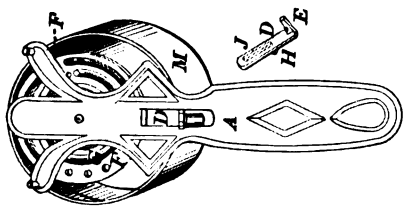

43644

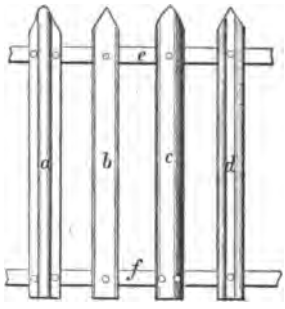

43640

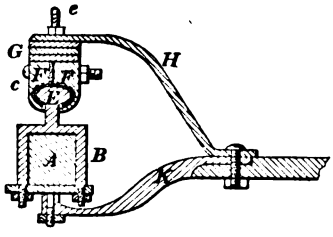

43642

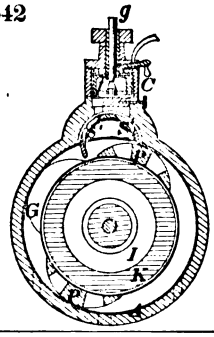

43641

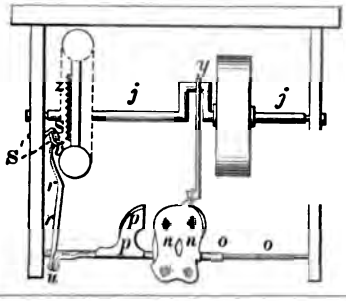

43646

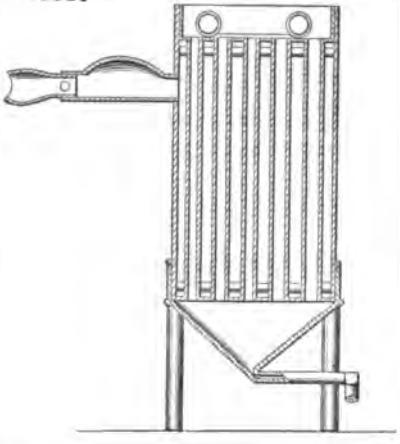

43643

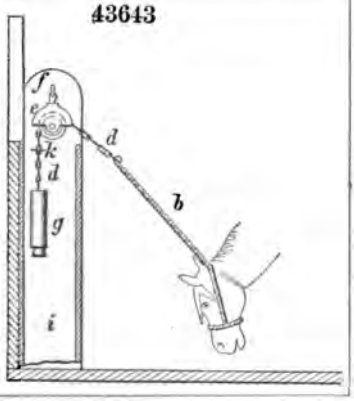

43648

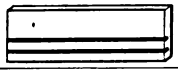

43651

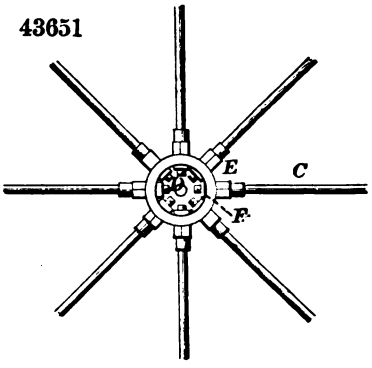

43649

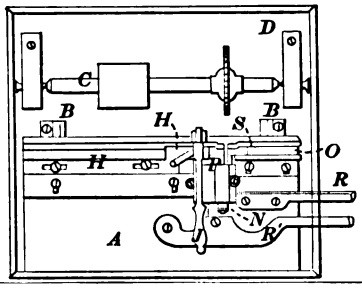

43653

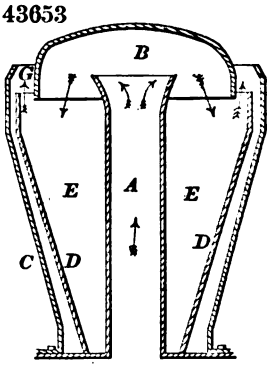

43650

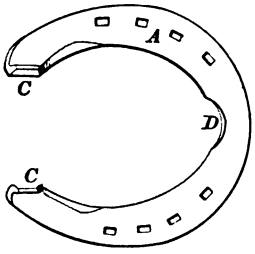

43654

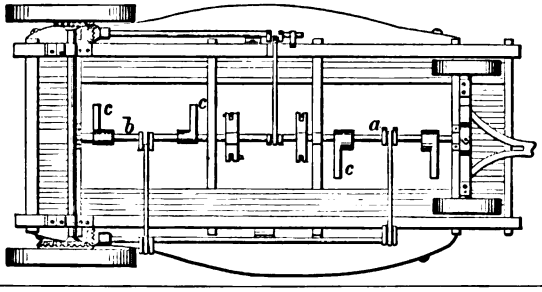

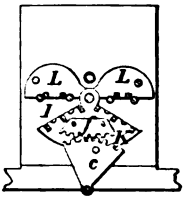

43652

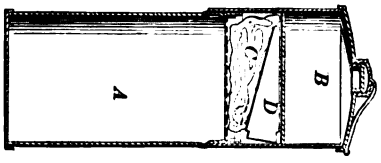

43655

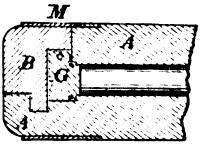

43656

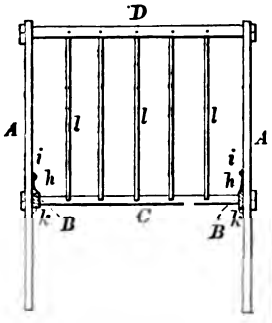

43662

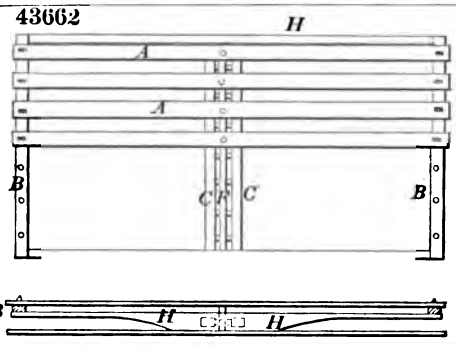

43663

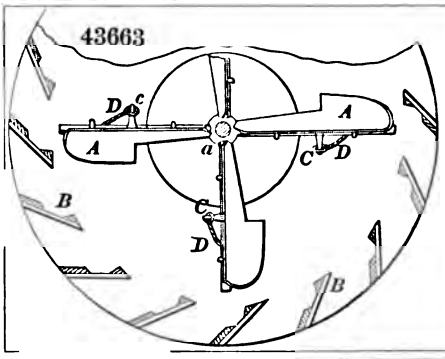

43661

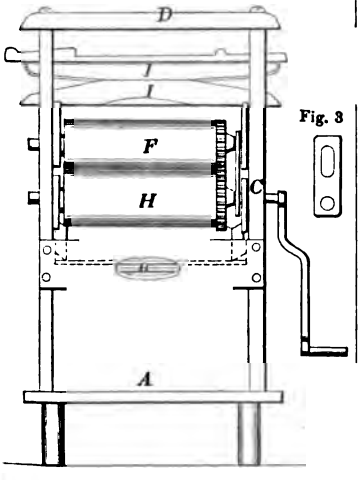

Fig. 3

43660

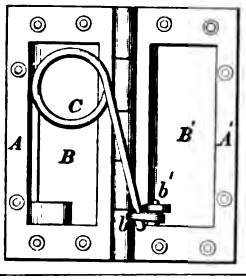

43664

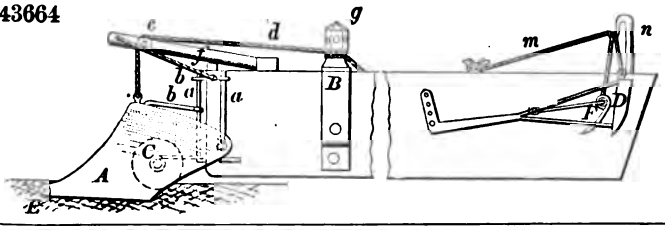

43657

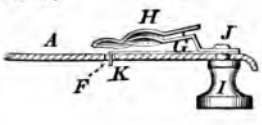

43665

43668

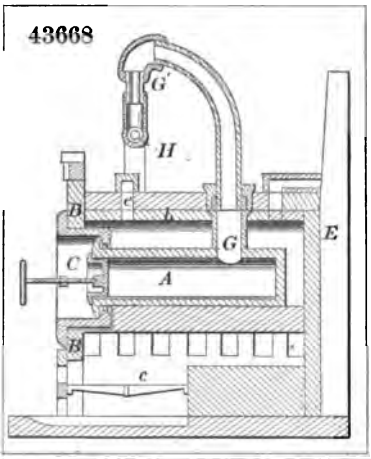

43671

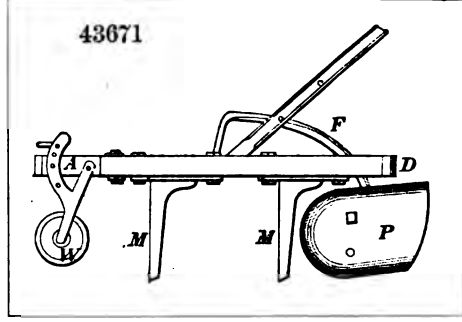

43670

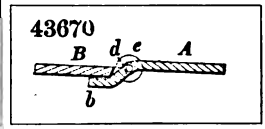

43673

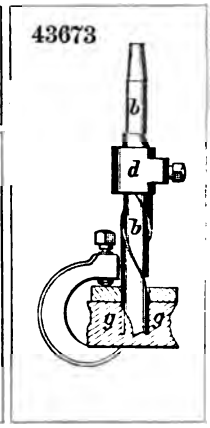

43672

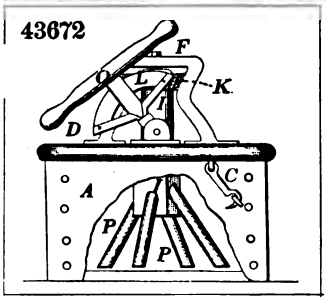

43669

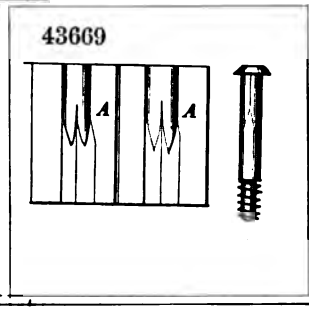

43674

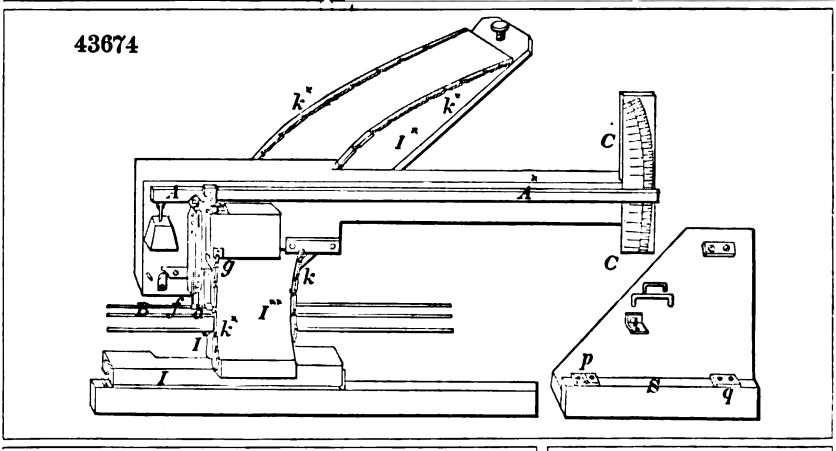

43675

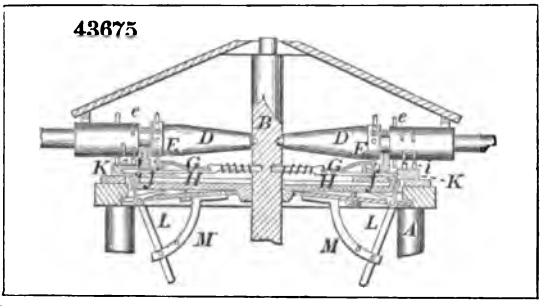

43676

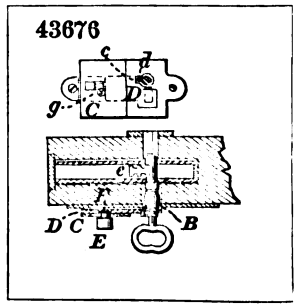

3677

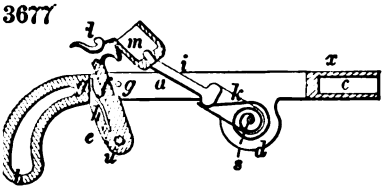

43682

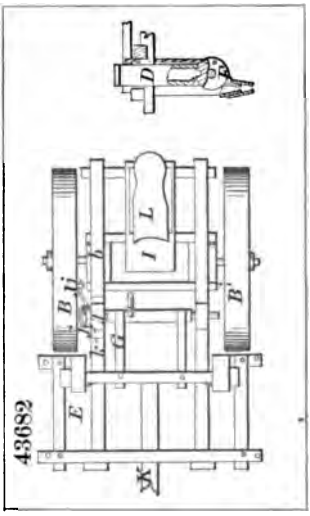

43678

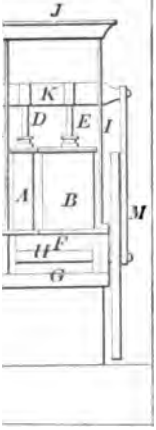

43679

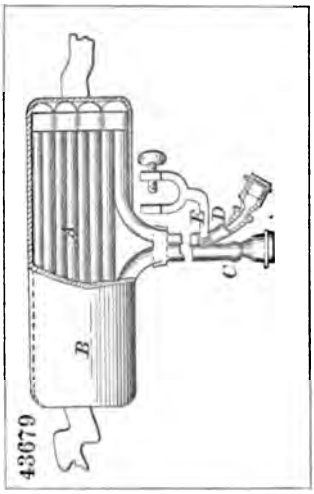

43683

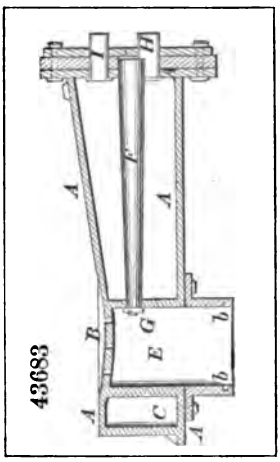

43680

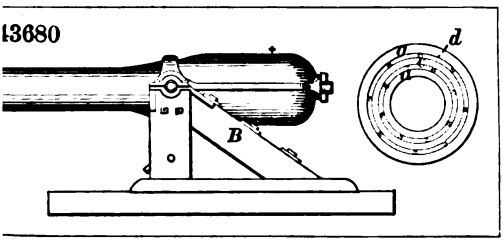

43681

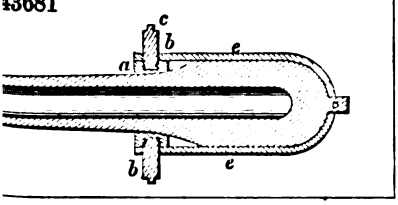

43685

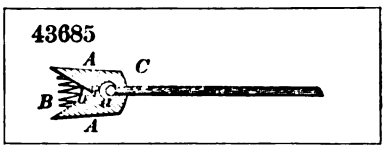

43684

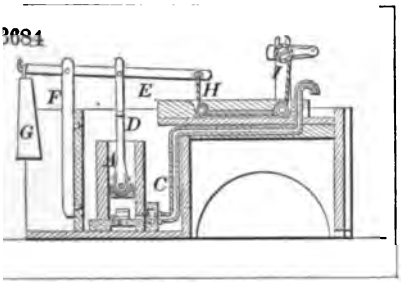

43686

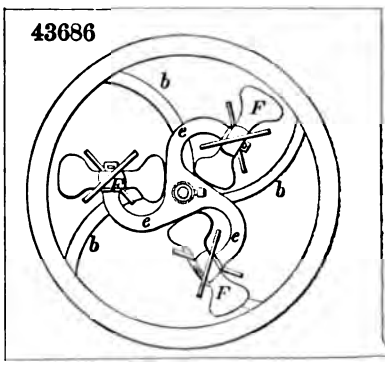

43687

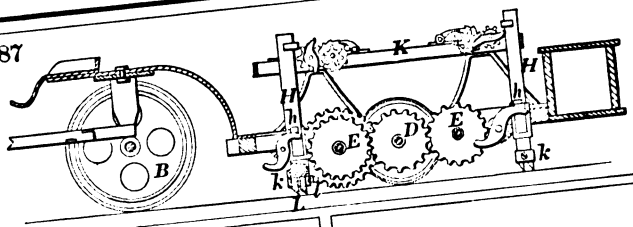

43690

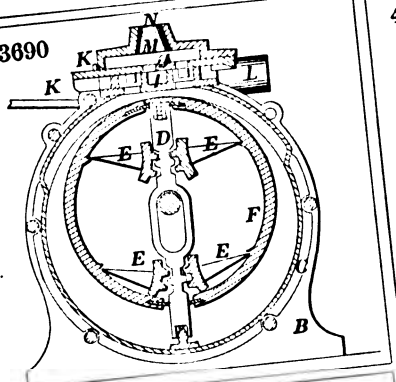

43688

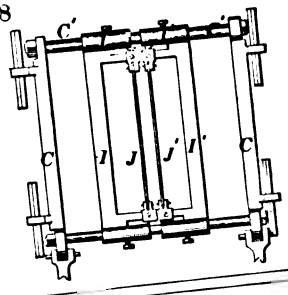

43692

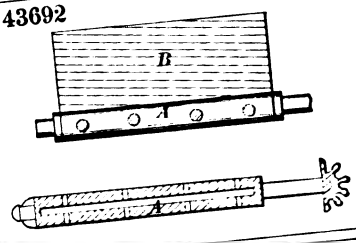

43689

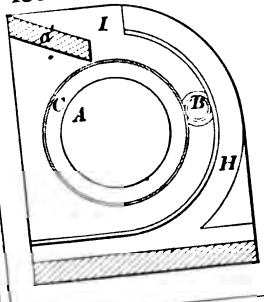

43691

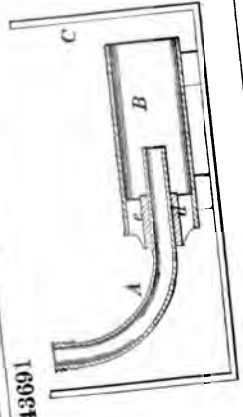

43693

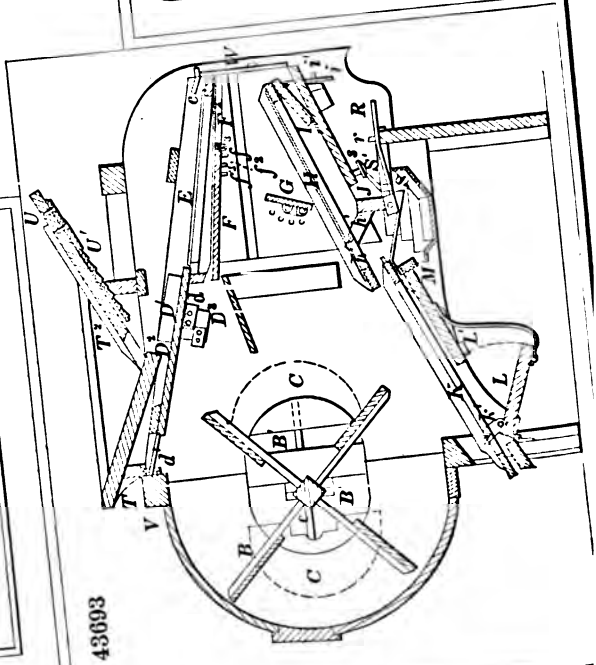

43694

43696

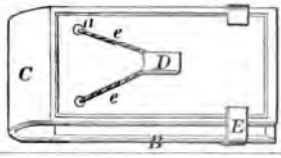

43697

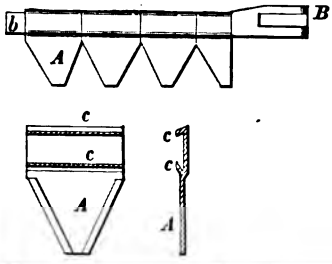

43698

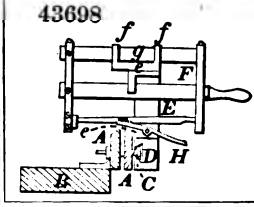

43701

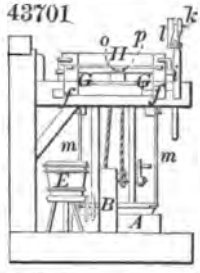

43700

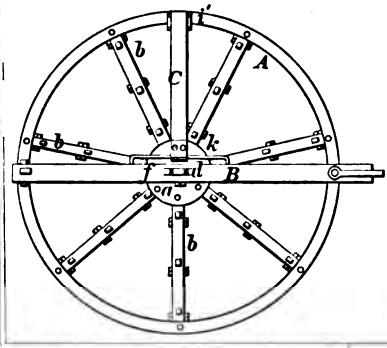

43703

43699

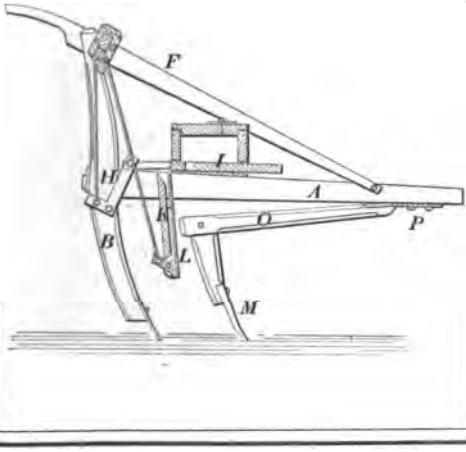

43702

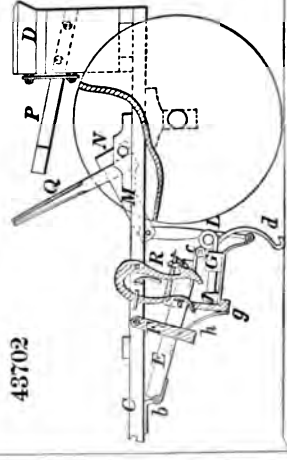

43704

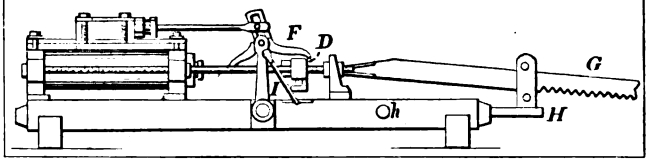

43705

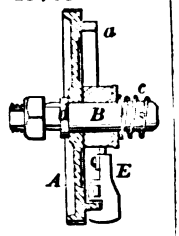

43706

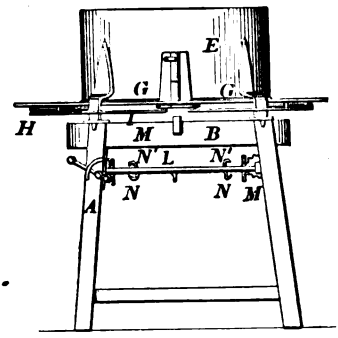

43710

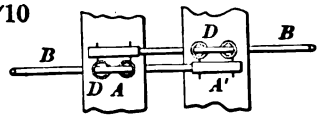

43708

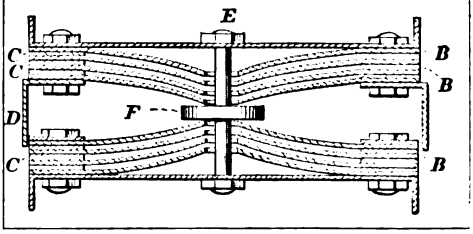

43707

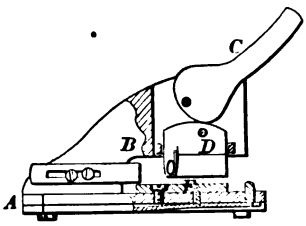

43709

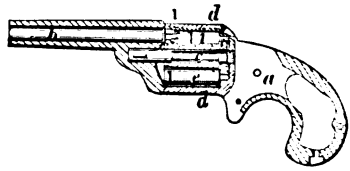

43712

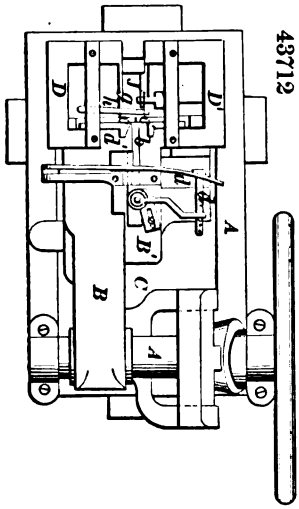

43711

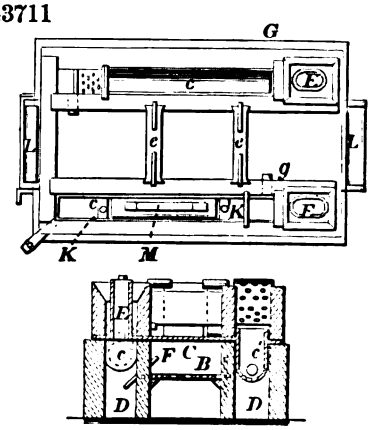

43713

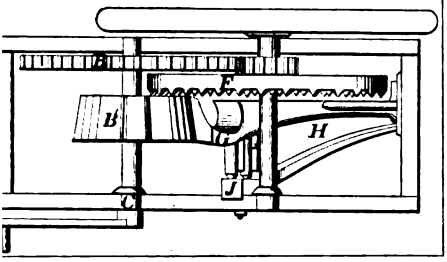

43716

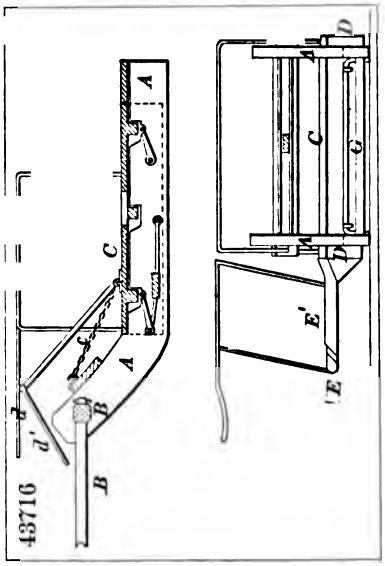

43715

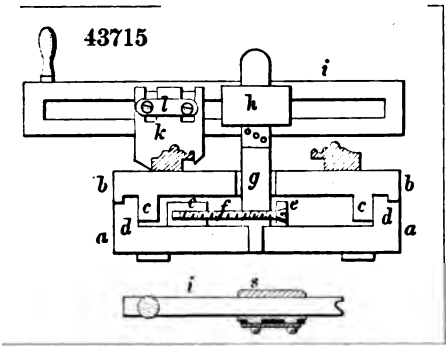

43714

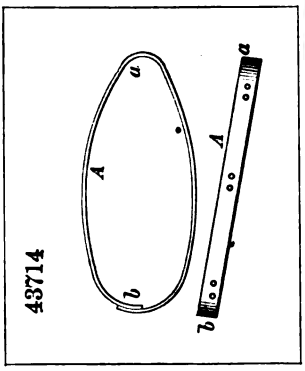

43718

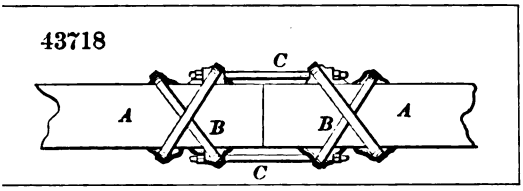

43717

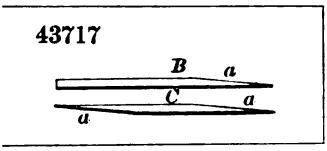

43720

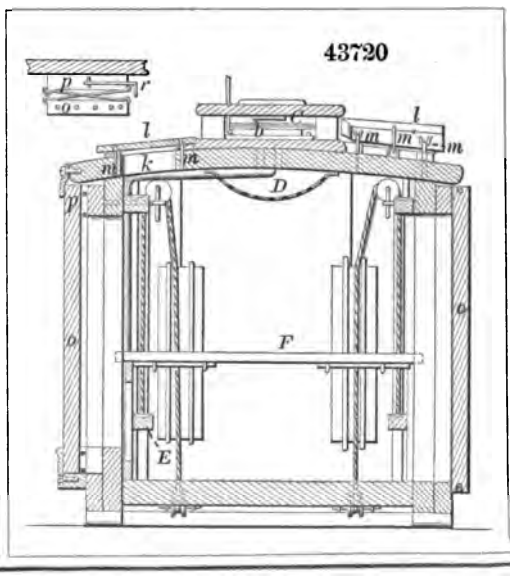

43719

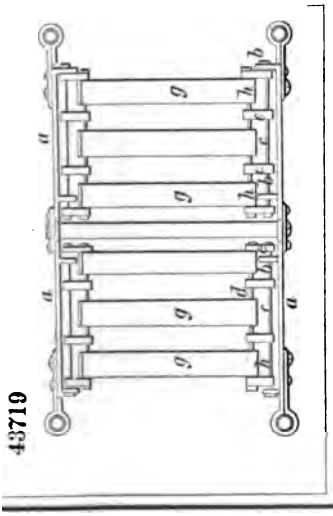

43721

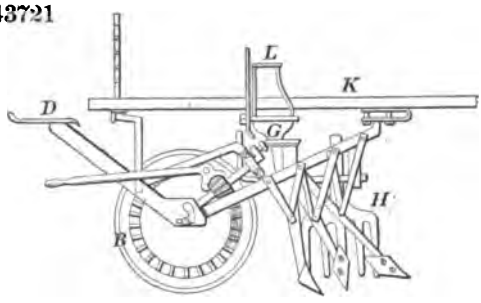

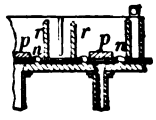

43722

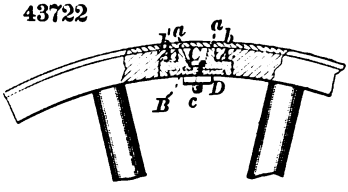

43723

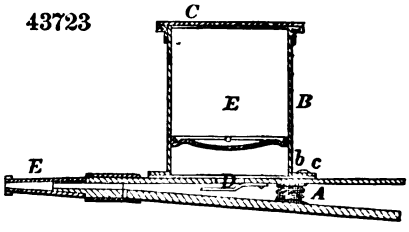

43724

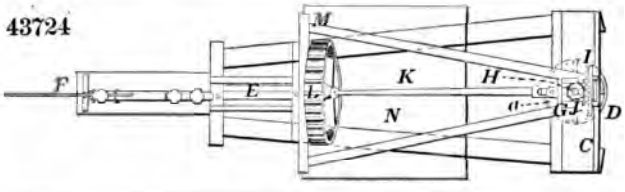

43725

43726

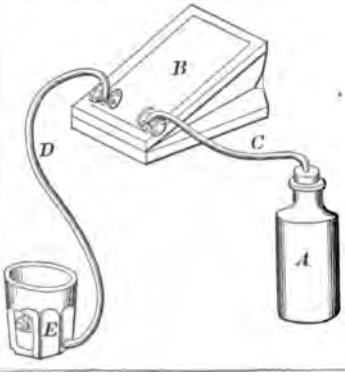

43727

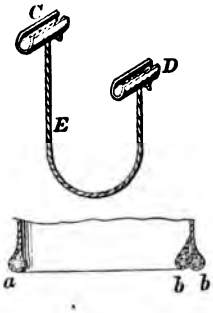

43728

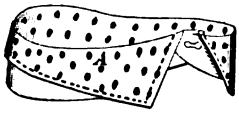

43729

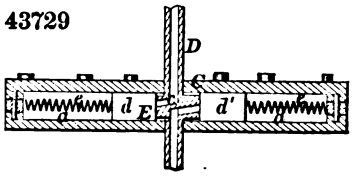

43730

43737

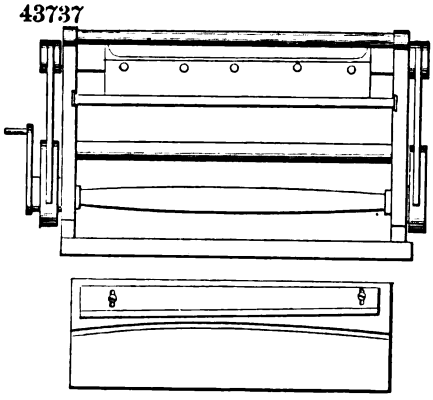

43733

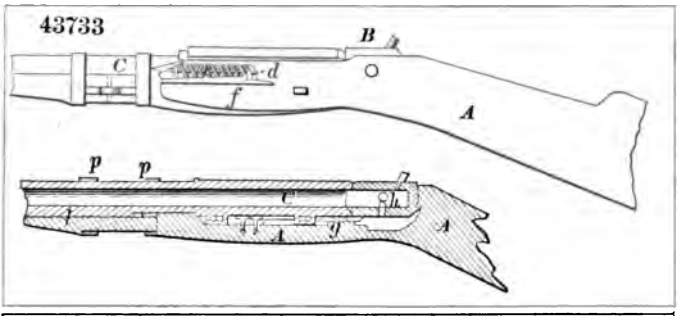

43734

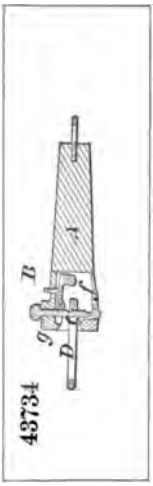

43738

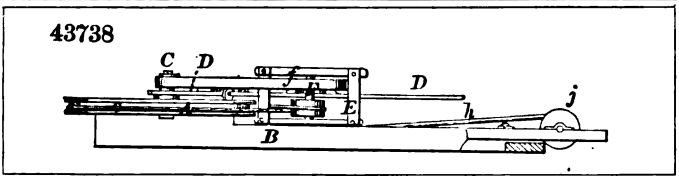

43736

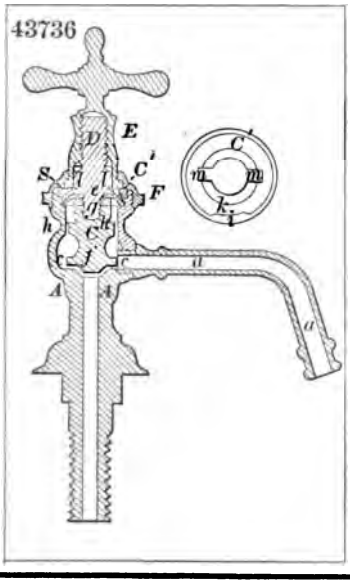

43735

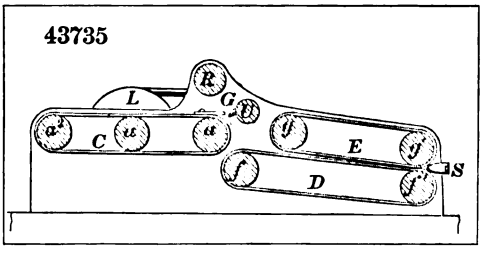

43739

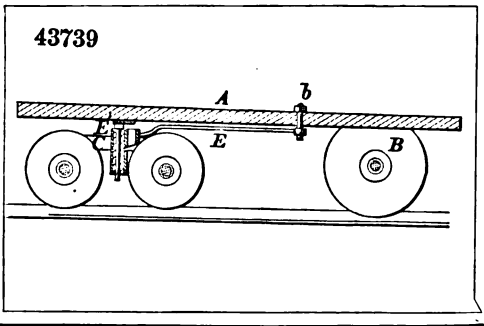

43740

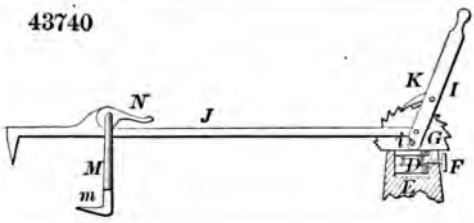

43744

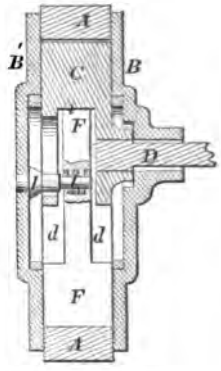

43741

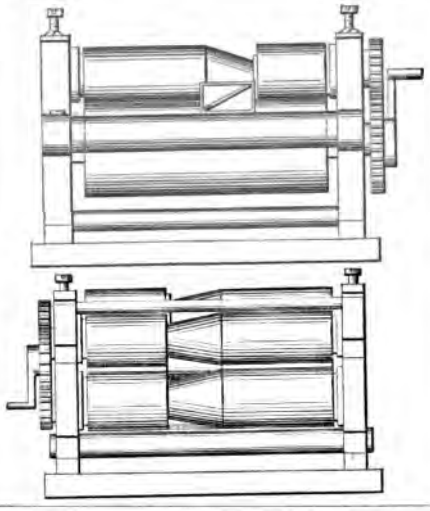

43742

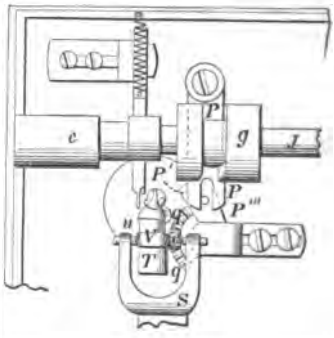

43743

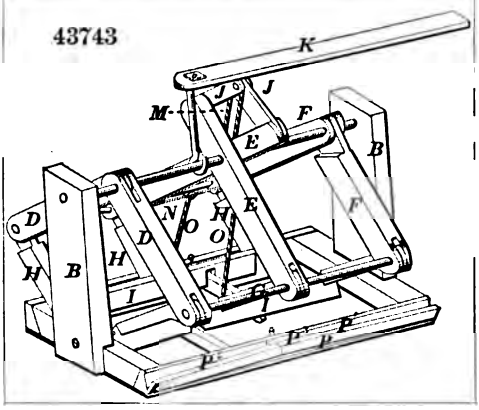

43746

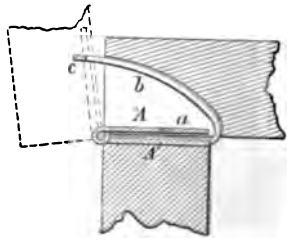

43745

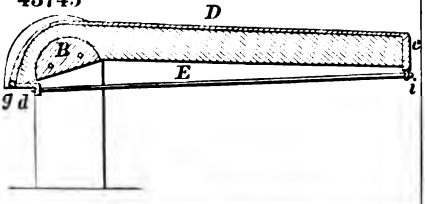

43747

43749

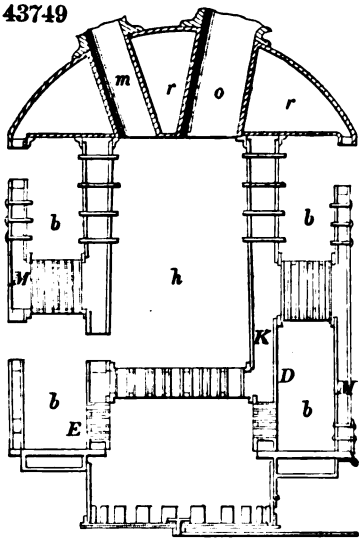

43750

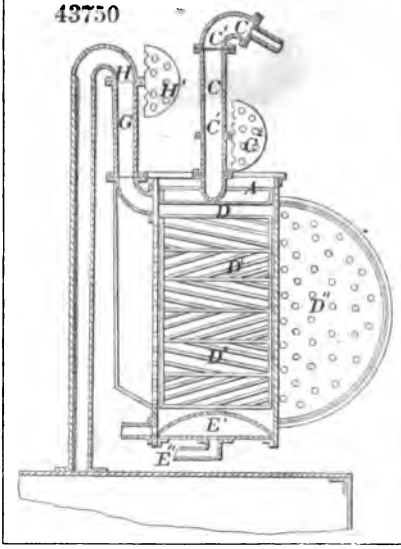

43751

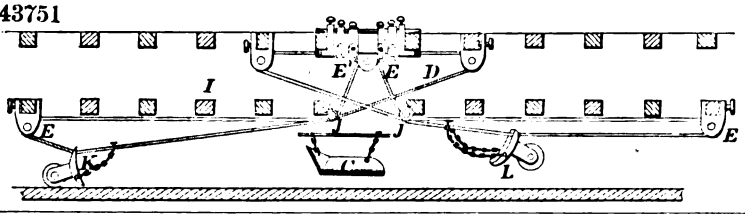

43752

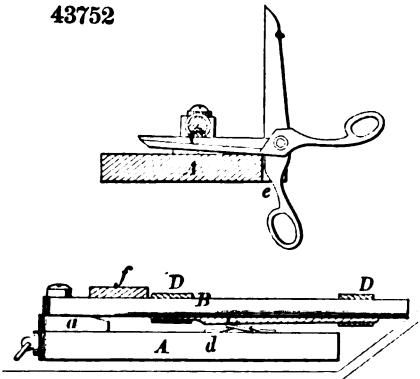

43754

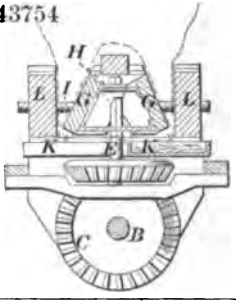

43753

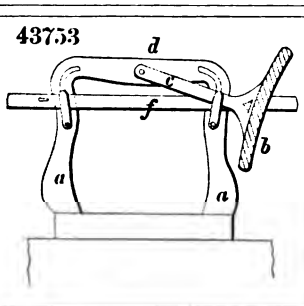

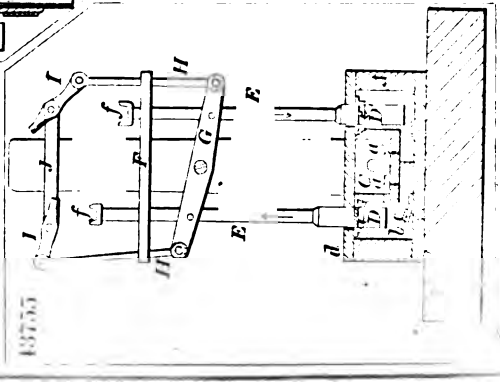

43756

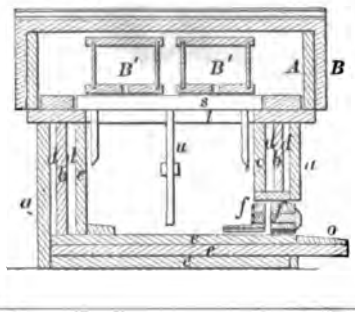

43759

43757

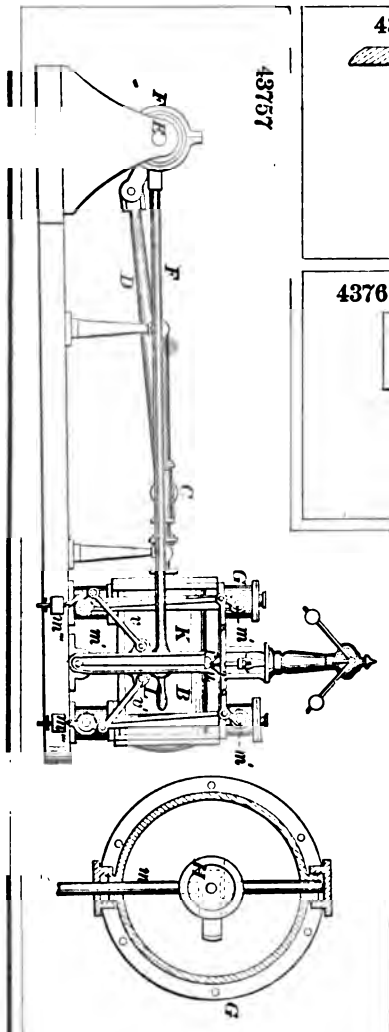

43764

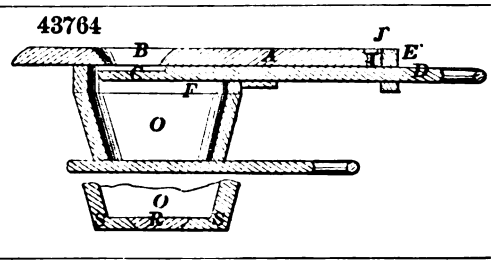

43761

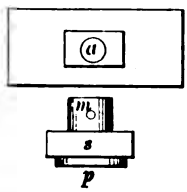

43762

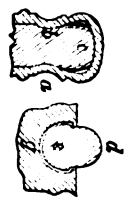

43763

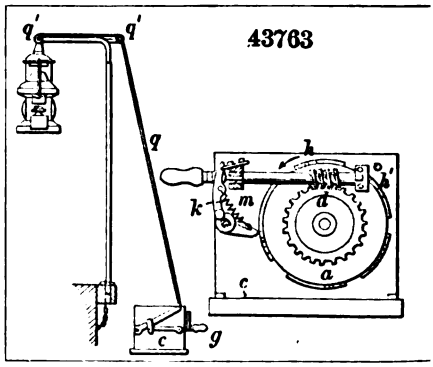

43765

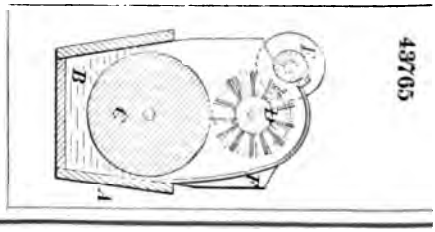

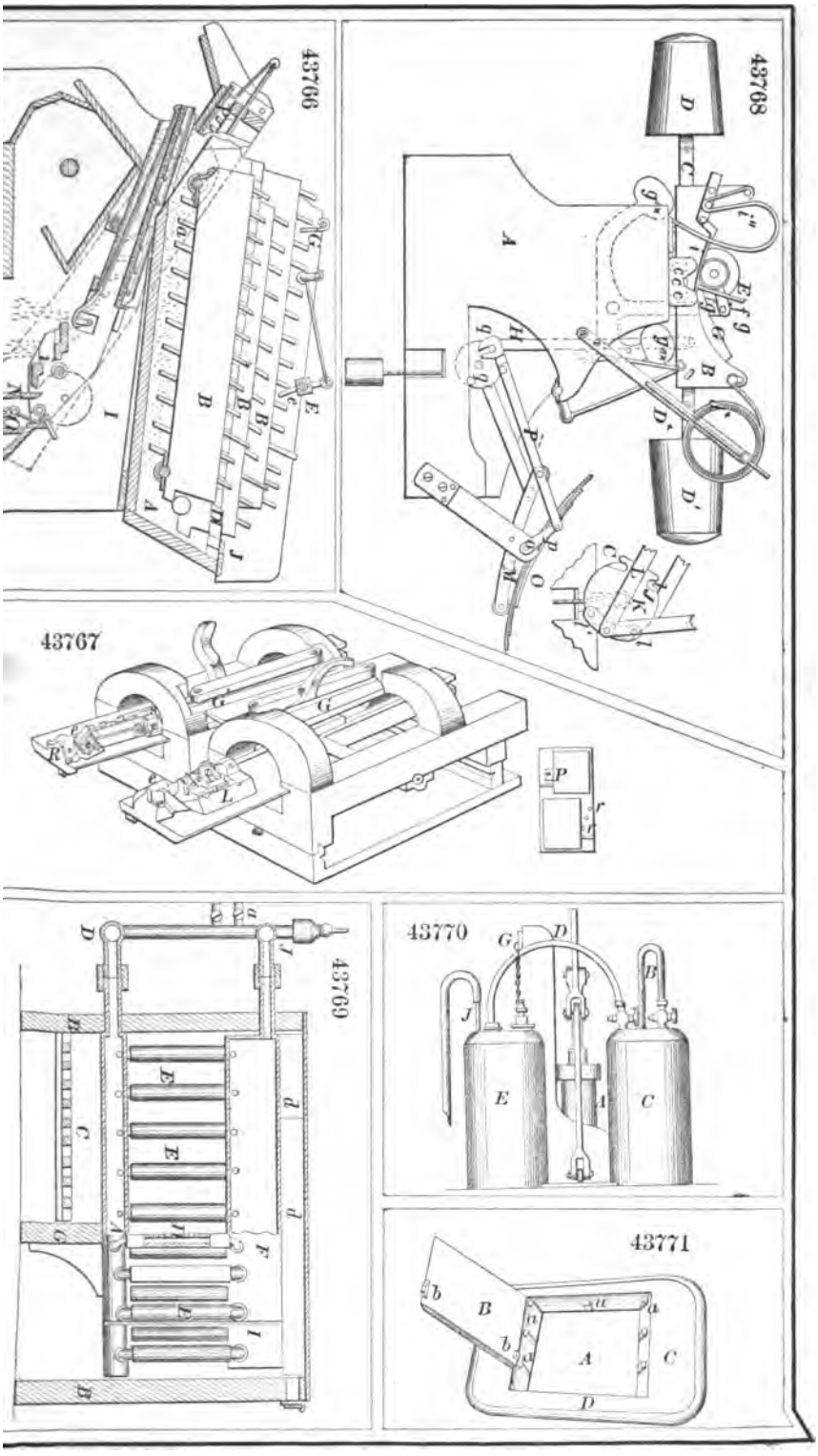
43768
43766
43767
43769
43770
43771

43772

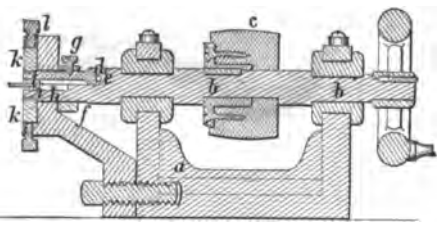

43773

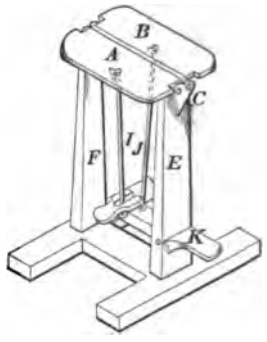

43774

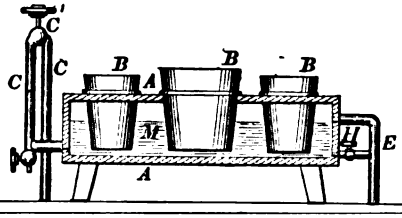

43775

43776

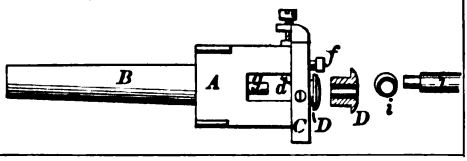

43777

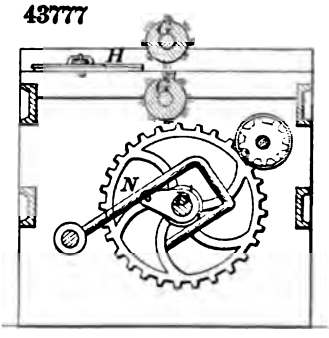

43778

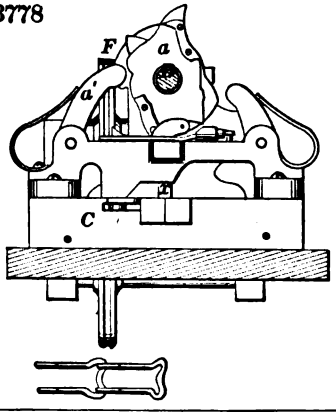

43779

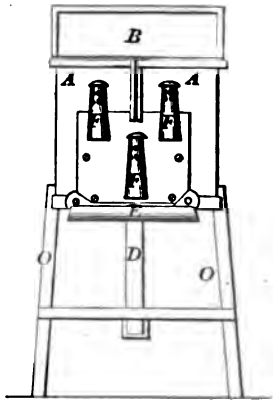

43780

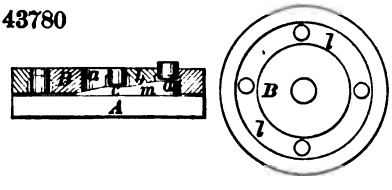

43781

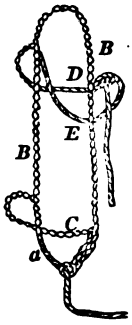

43783

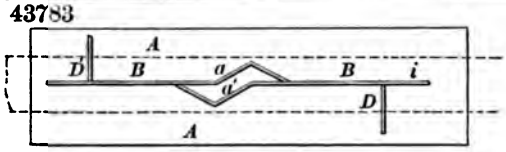

43785

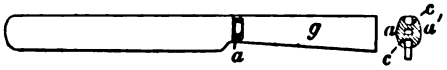

43784

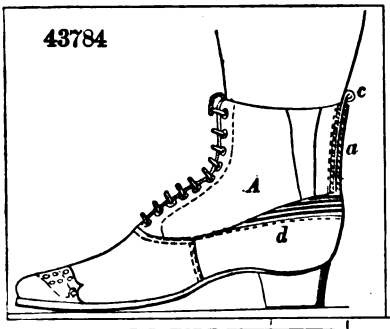

43782

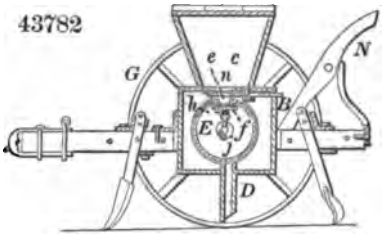

43786

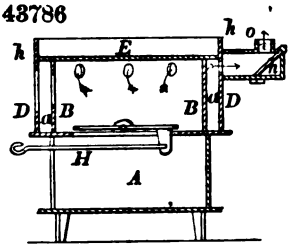

43788

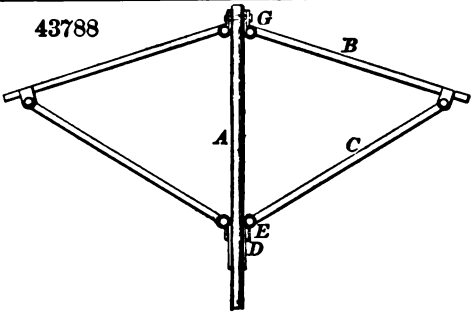

43787

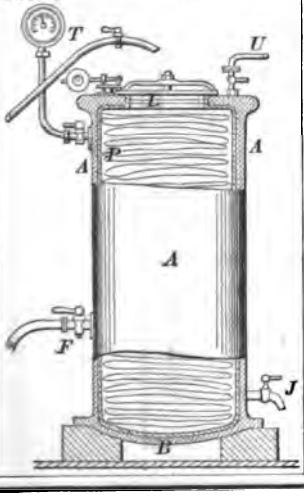

43789

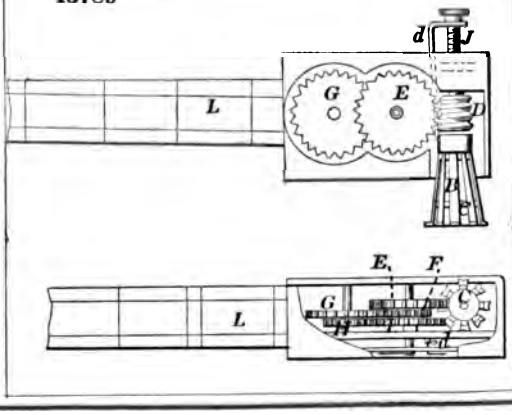

43790

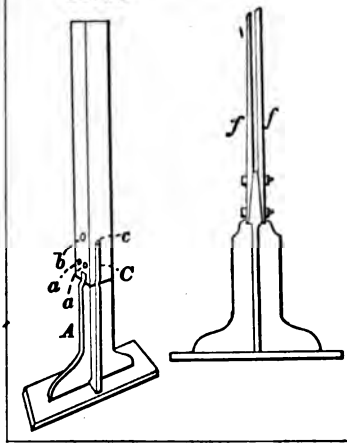

43793

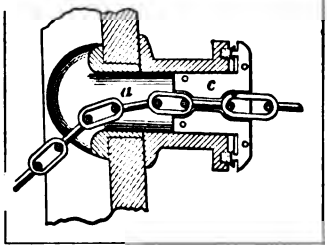

43792

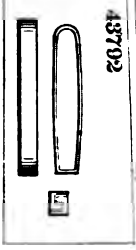

43794

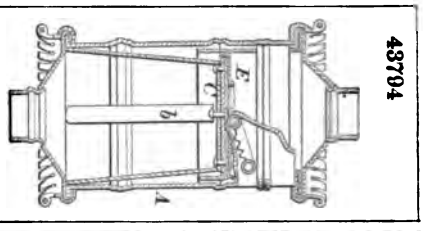

43791

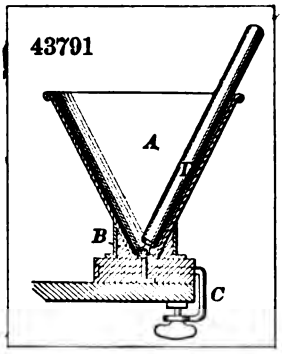

43795

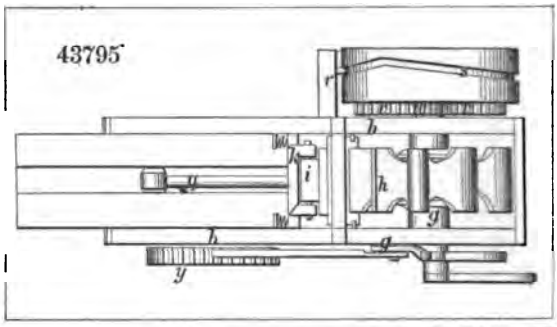

43796

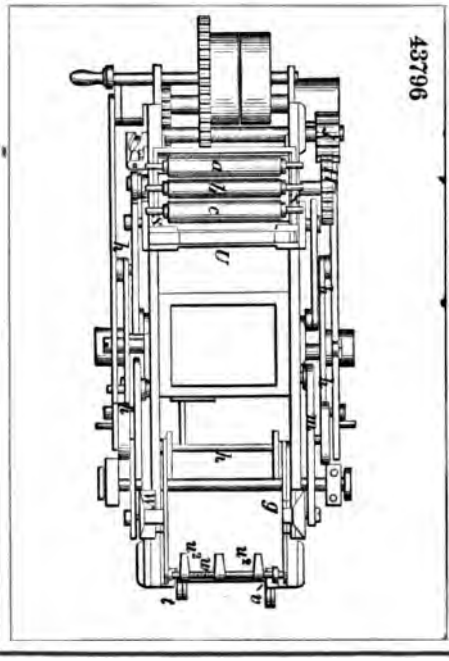

43797

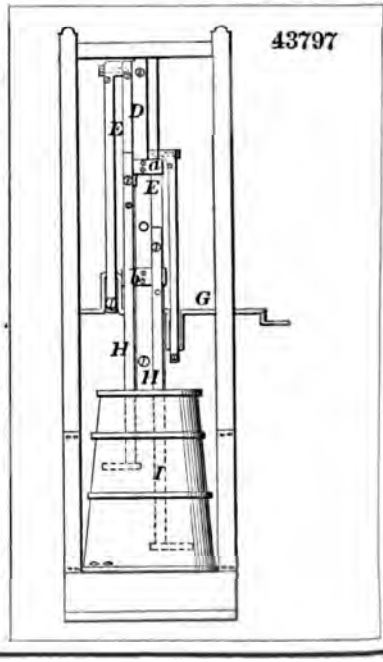

43798

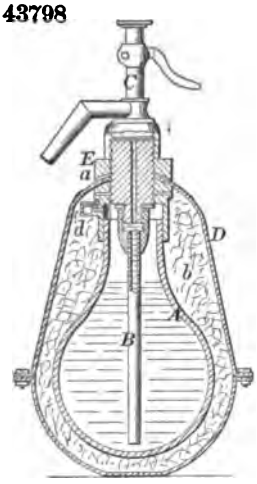

43799

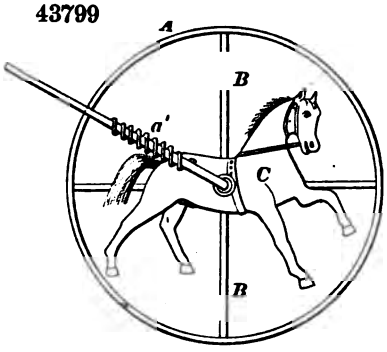

43801

43803

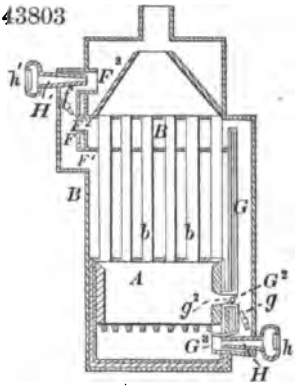

43802

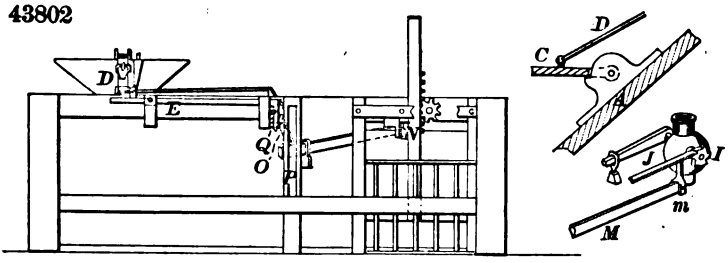

43804

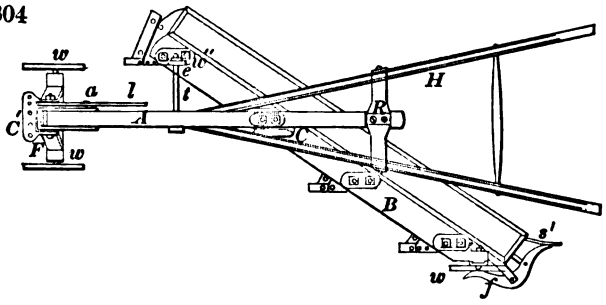

43805

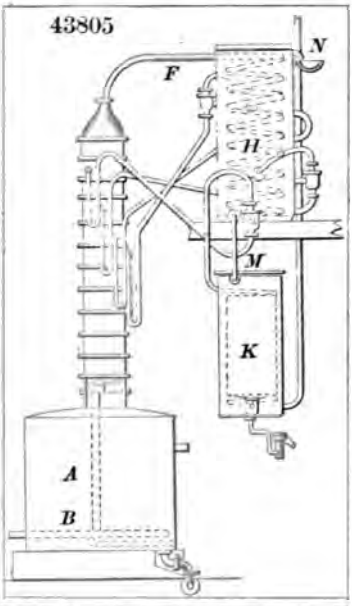

43808

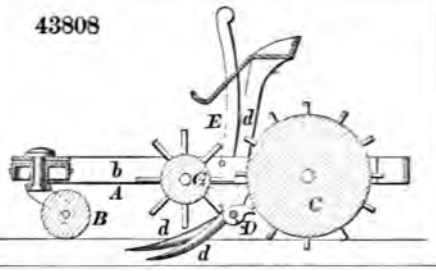

43809

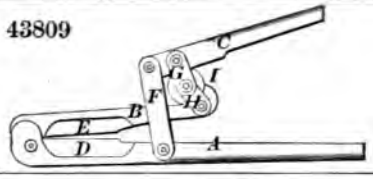

43811

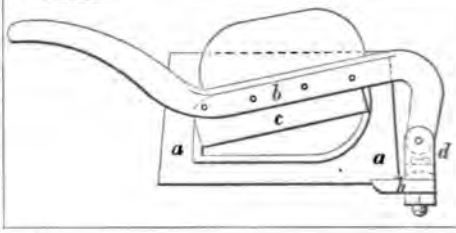

43810

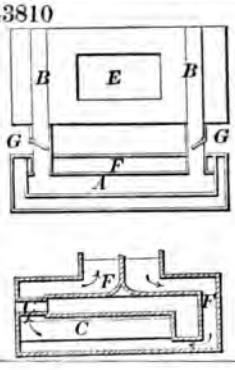

43807

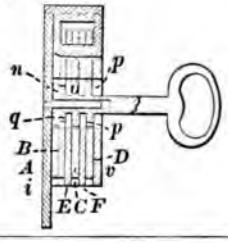

43806

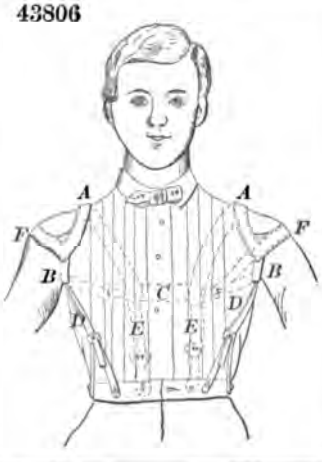

43812

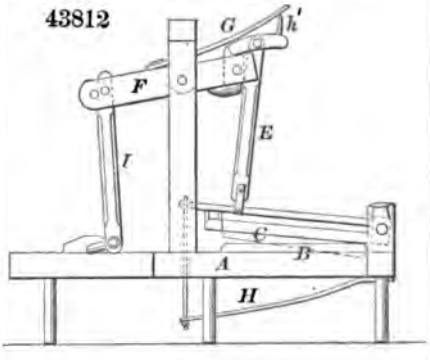

43814

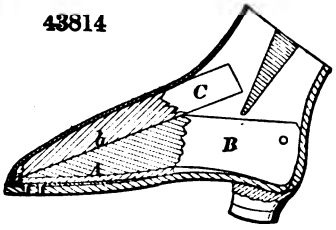

43818

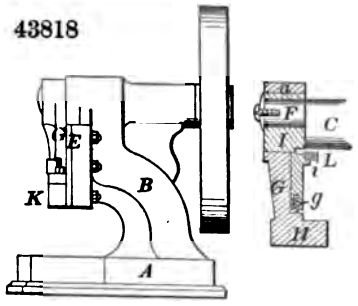

43817

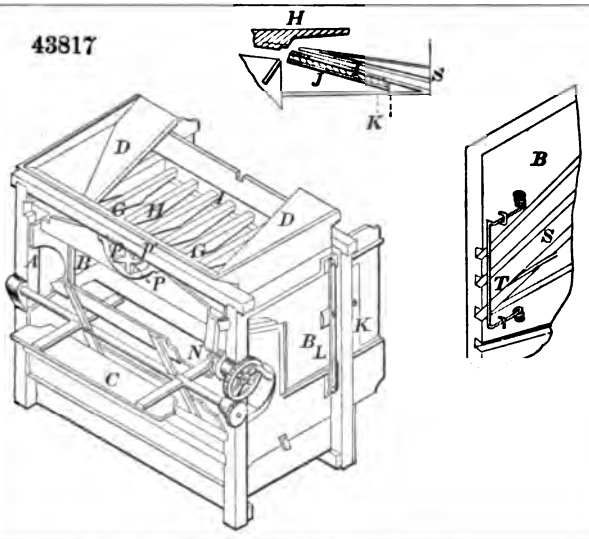

43815

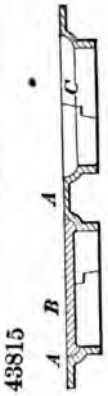

43816

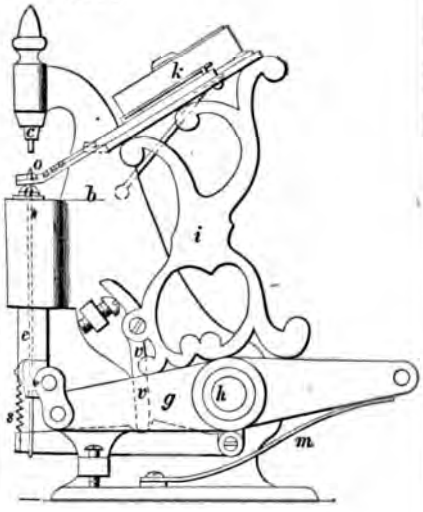

43819

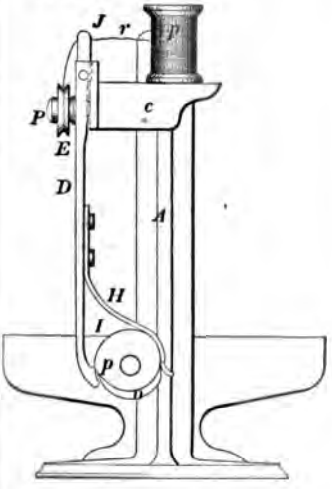

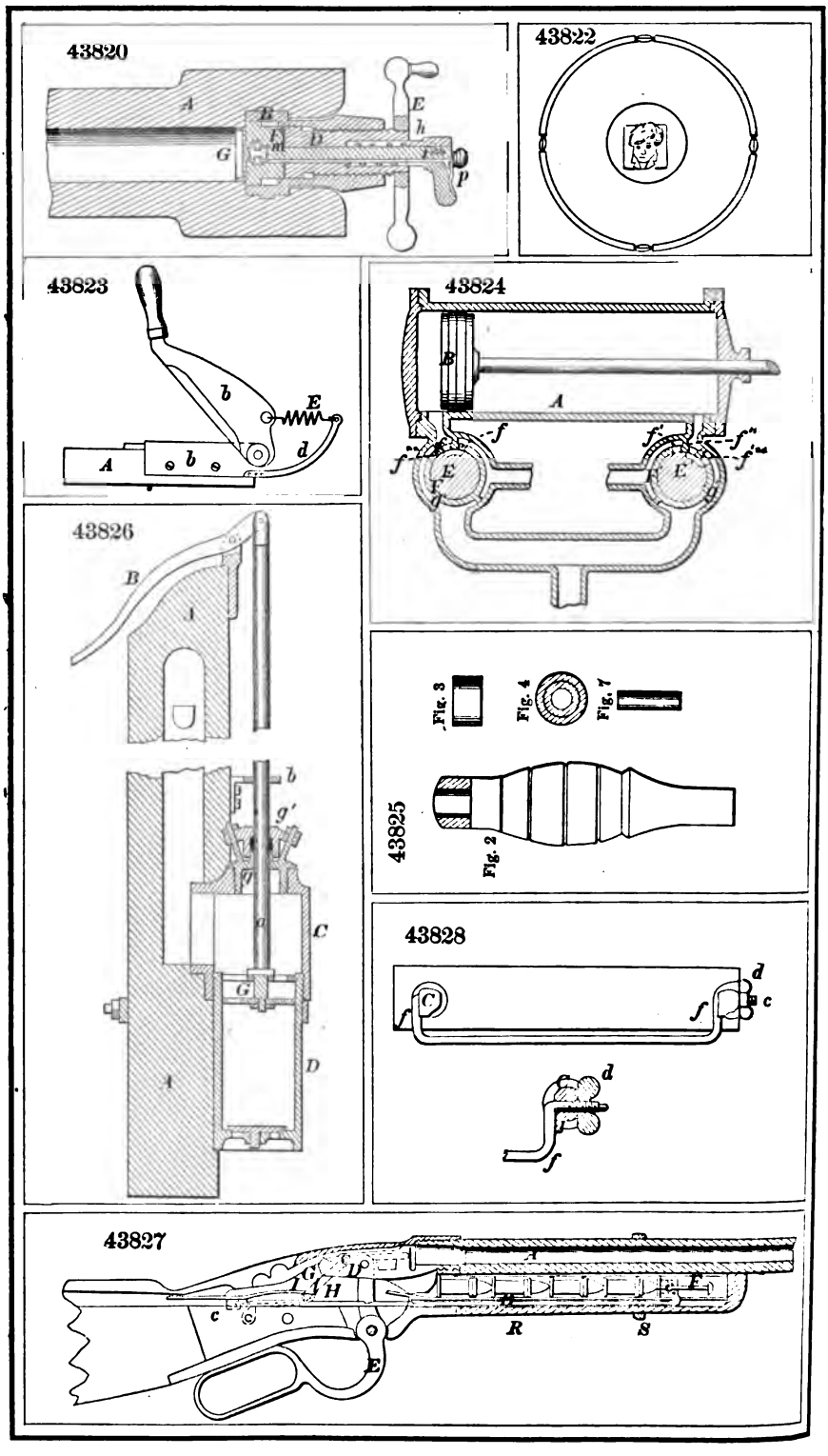
43820
43822
43823
43824
43826
43825
Fig. 3
Fig. 4
Fig. 7
Fig. 2
43828
43827

43829

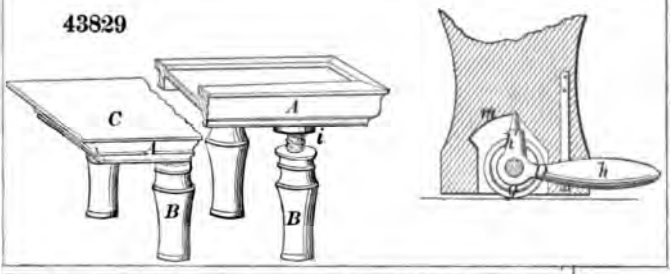

43830

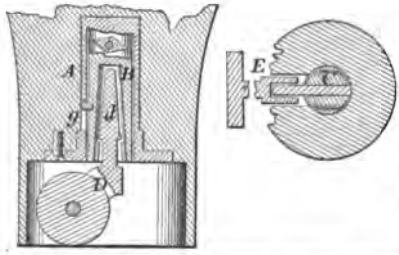

43831

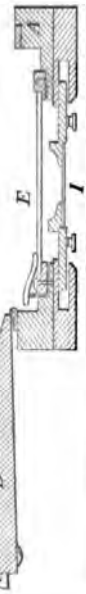

43832

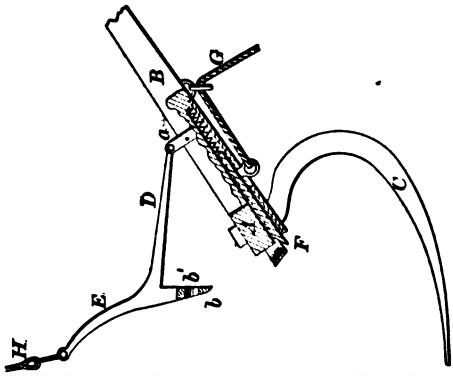

43831

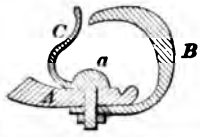

43833

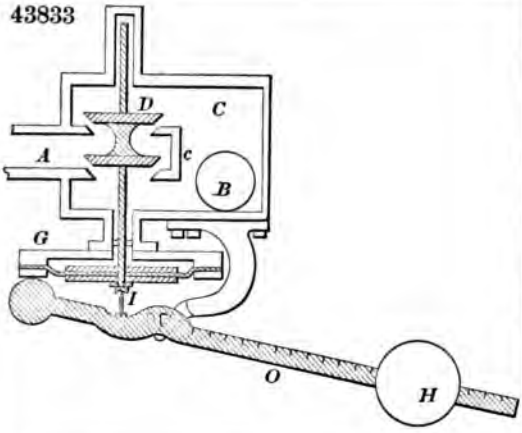

43835

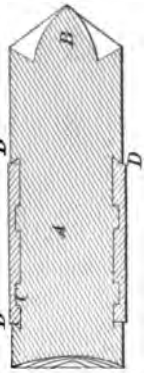

43836

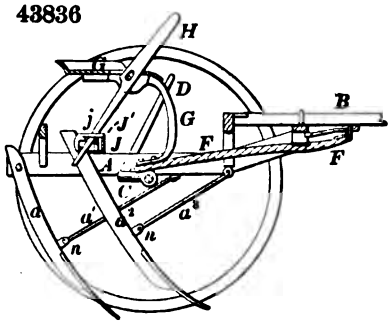

43837

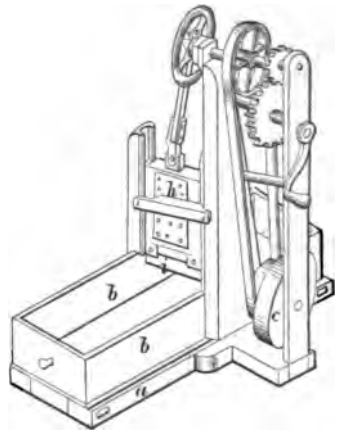

43840

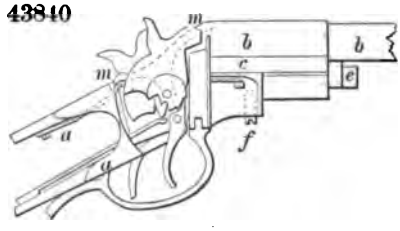

43839

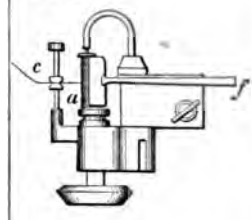

43841

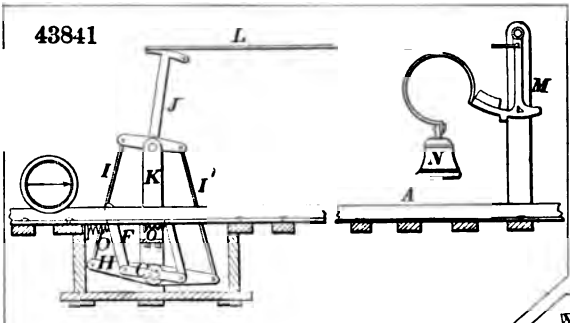

43838

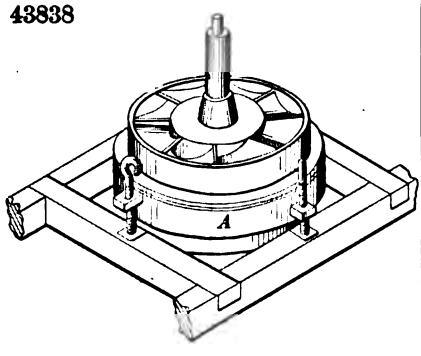

43842

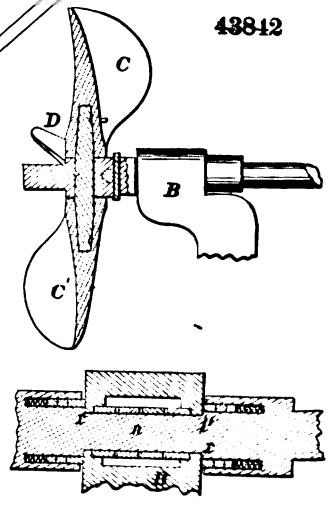

43843

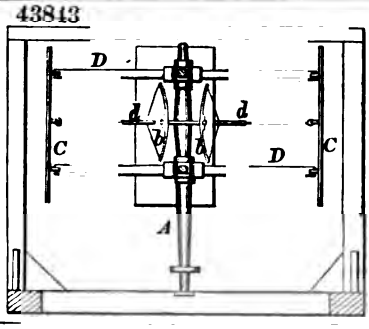

43844

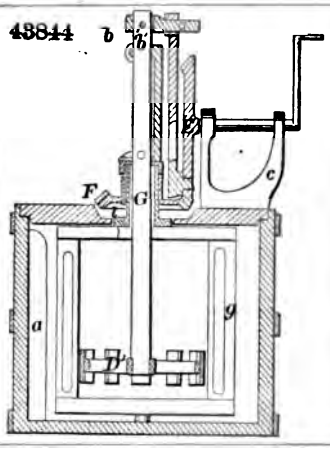

43848

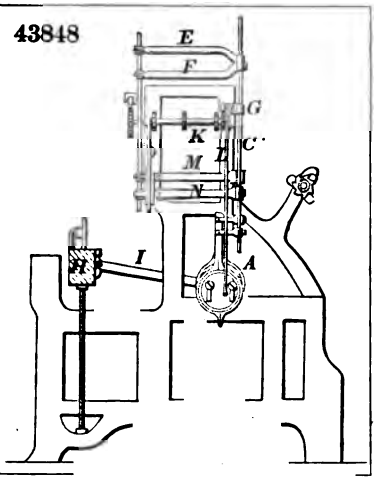

43846

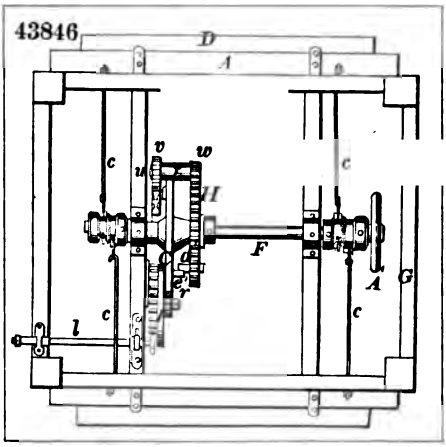

43845

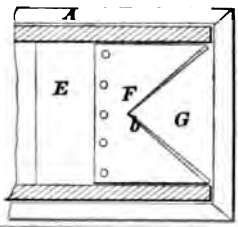

43850

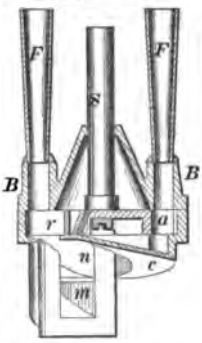

43849

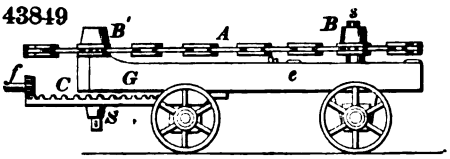

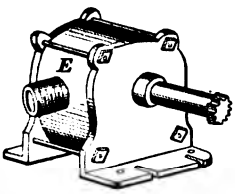

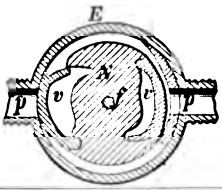

43851.

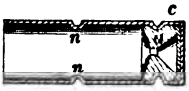

43853

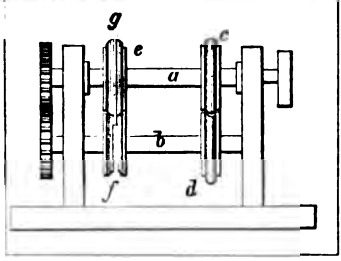

43855

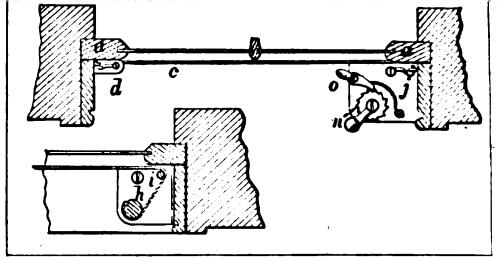

43854

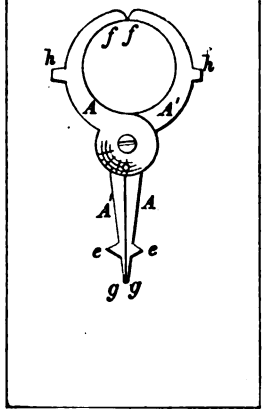

43856

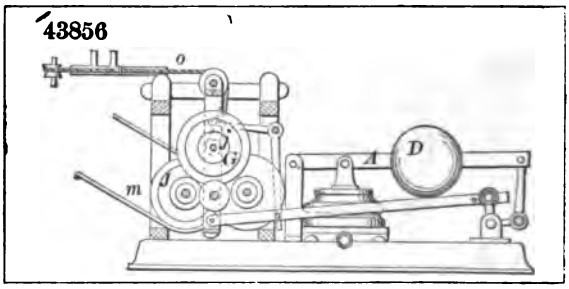

43859

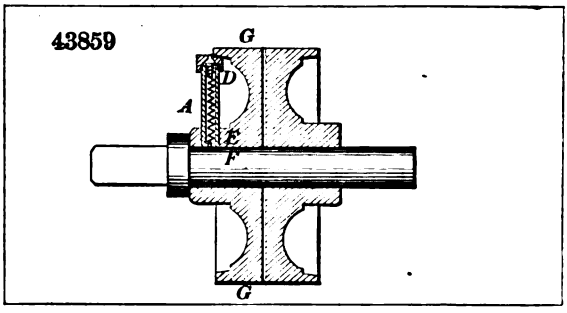

43857

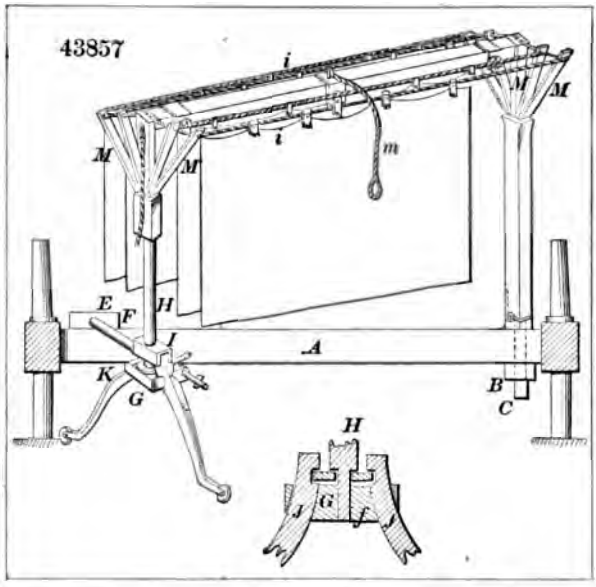

43858

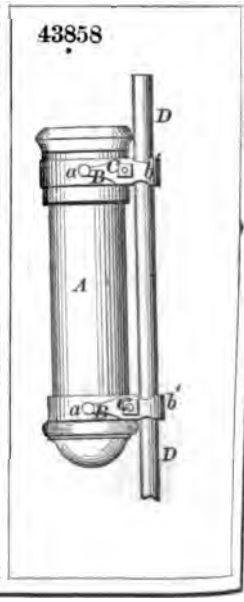

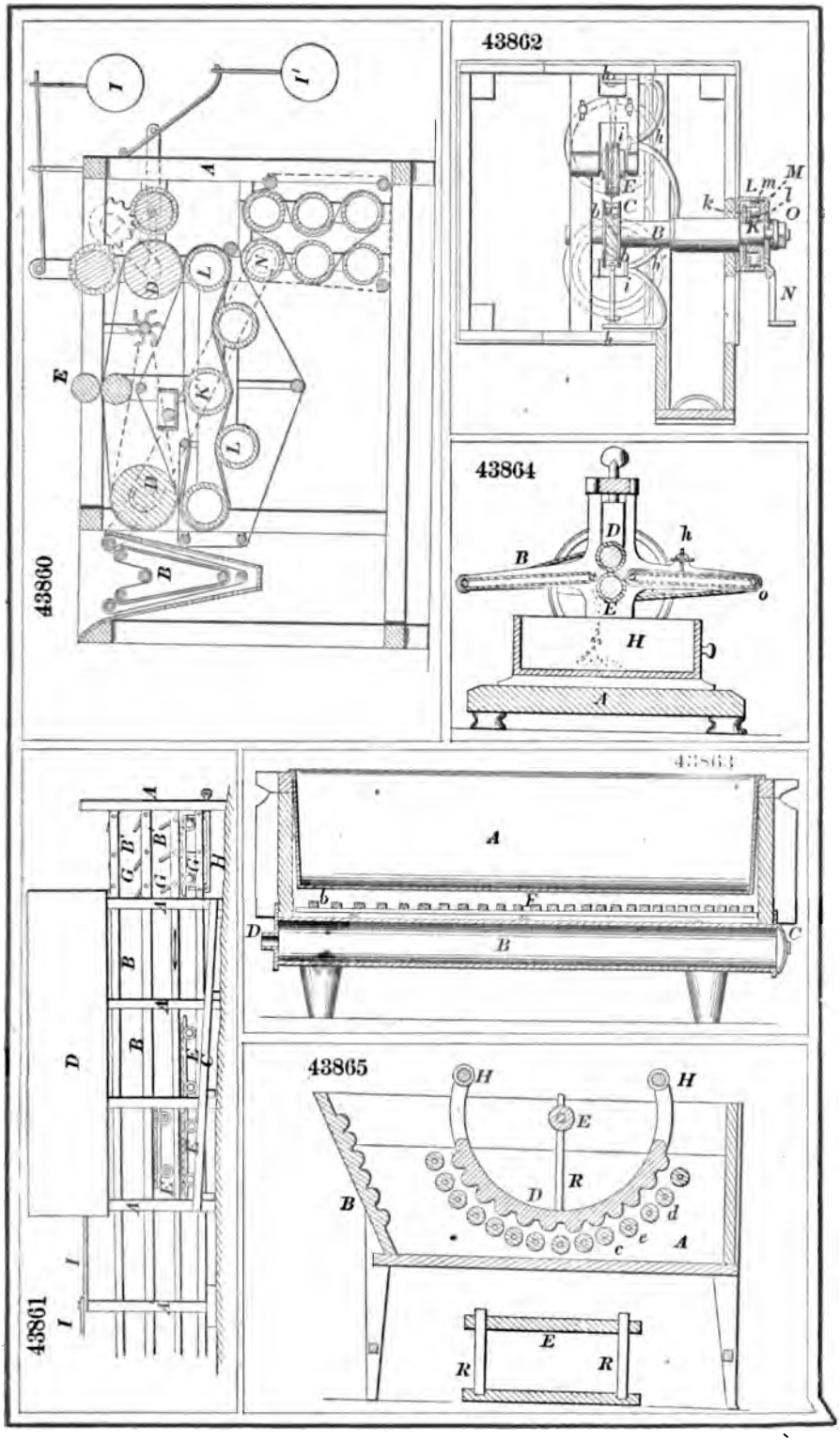
43860
43862
43864
43863
43861
43865

43867

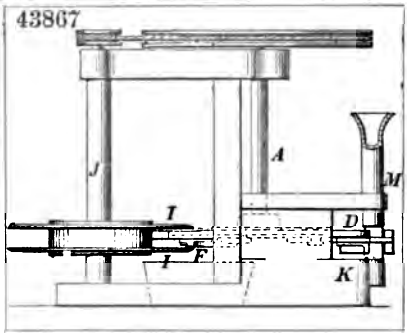

43868

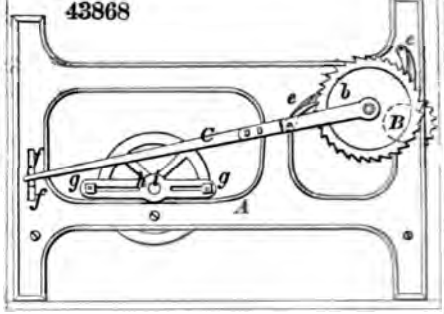

43869

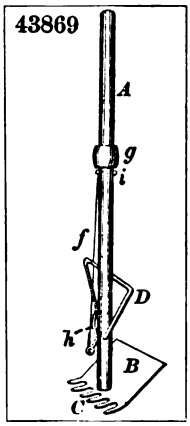

43872

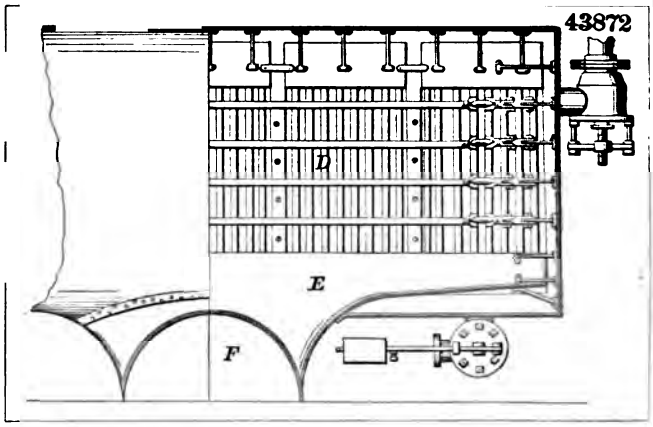

43870

43873

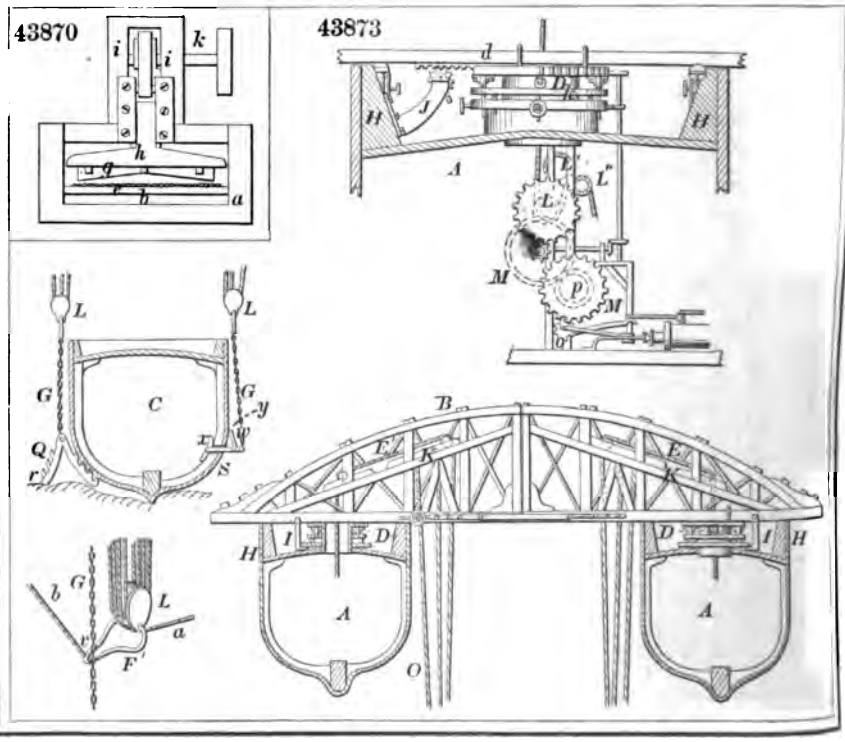

43874

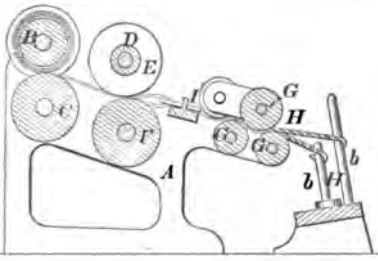

43876

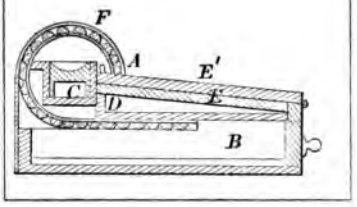

43875

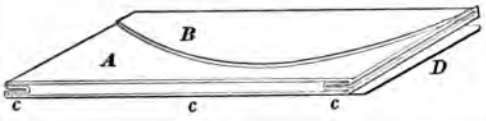

43879

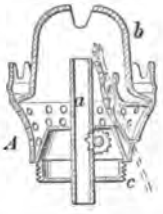

43877

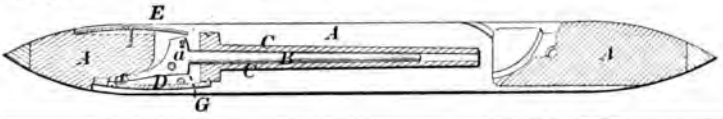

43878

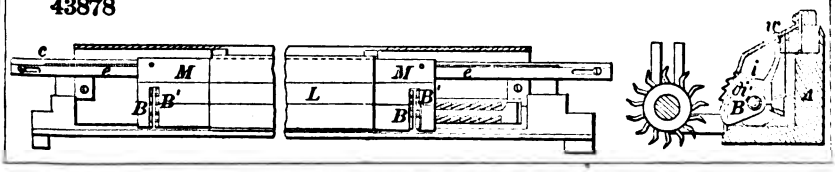

43880

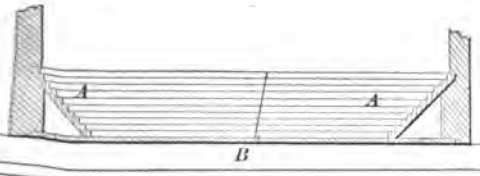

43881

43882

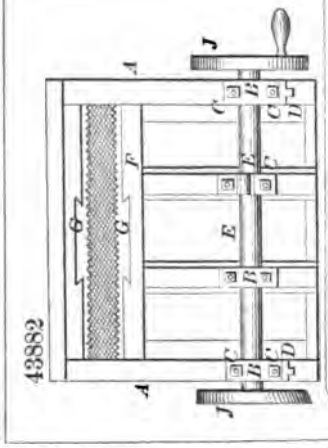

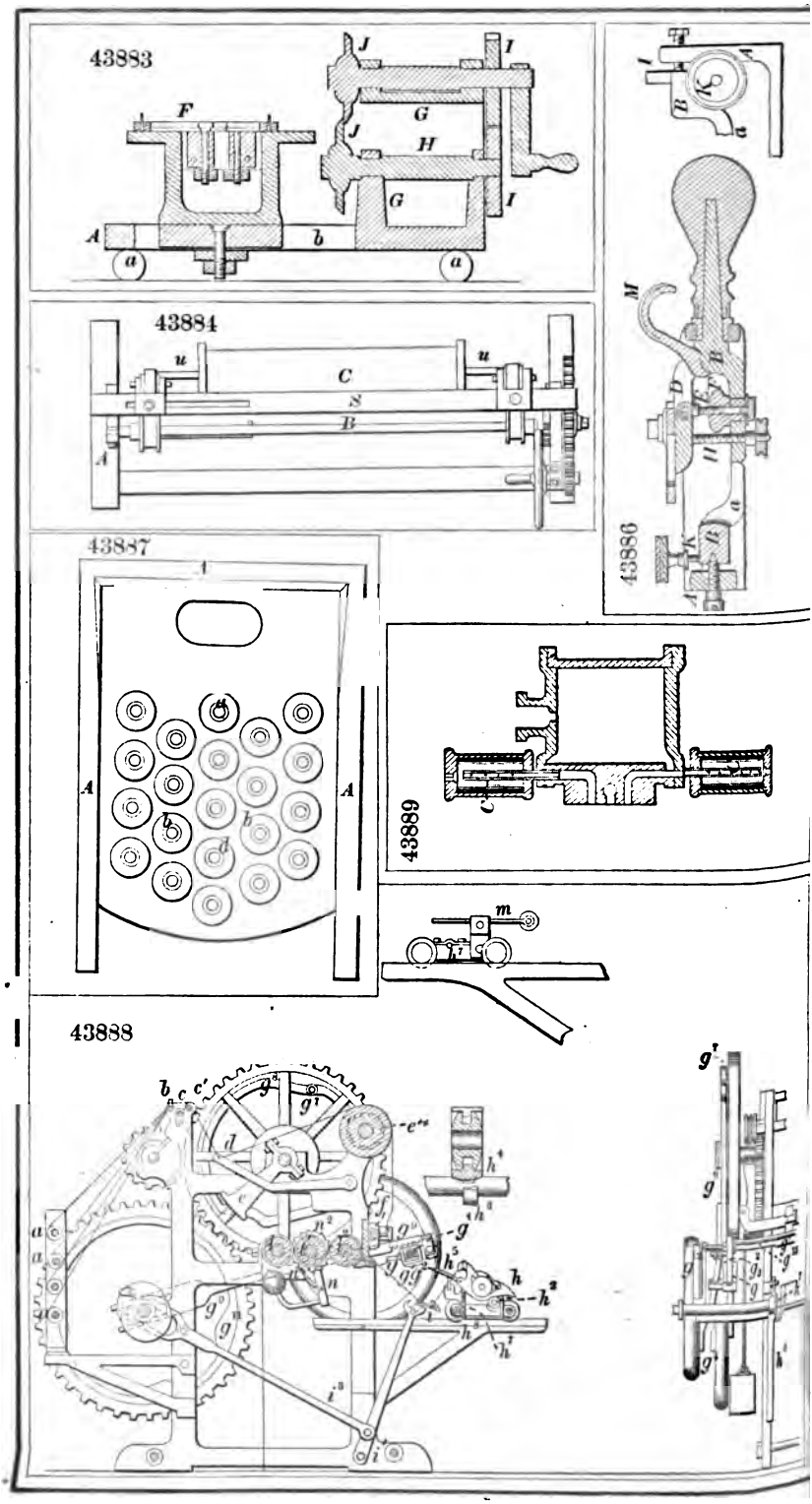
43883
43884
43886
43887
43888
43889

43890

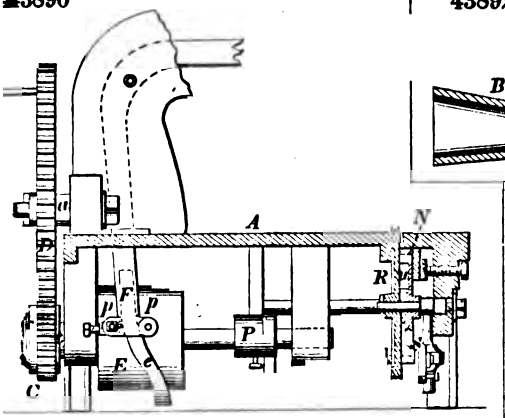

43892

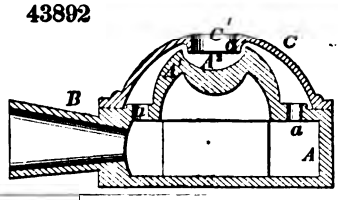

43896

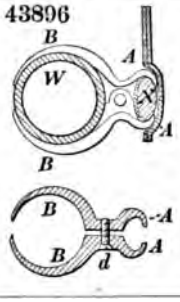

43893

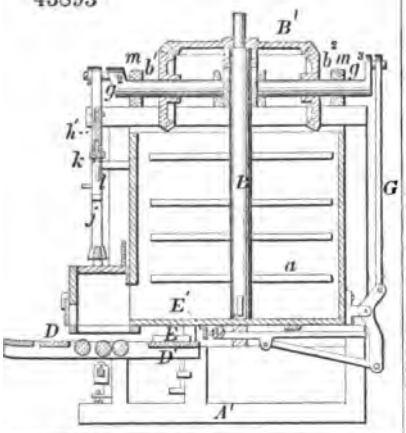

43897

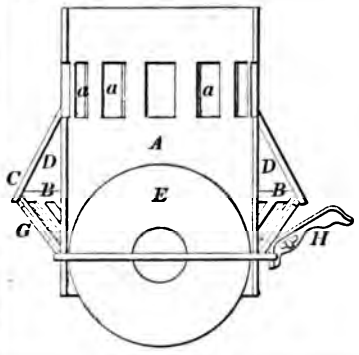

43894

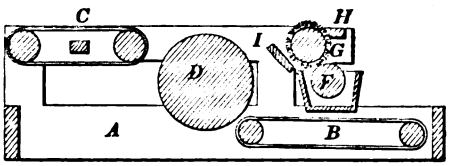

43898

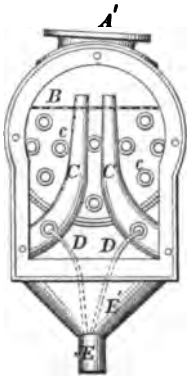

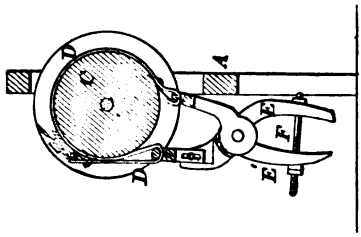

43899

43899

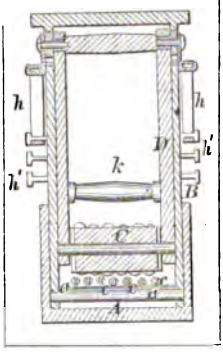

43901

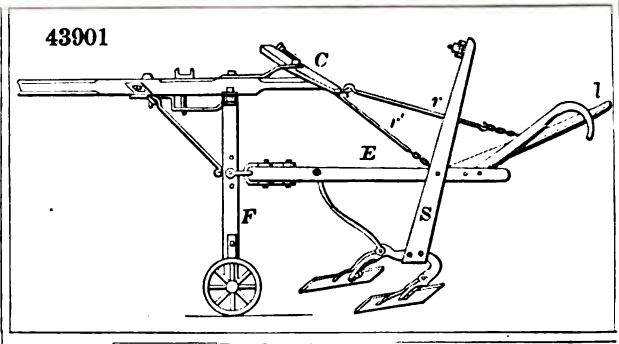

43900

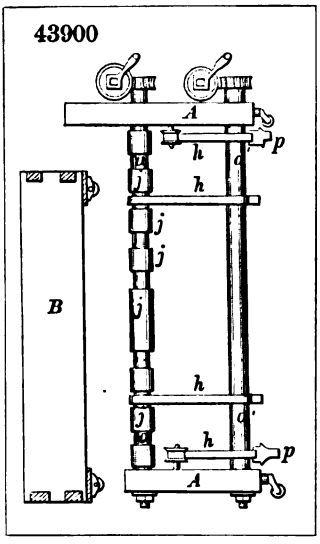

43903

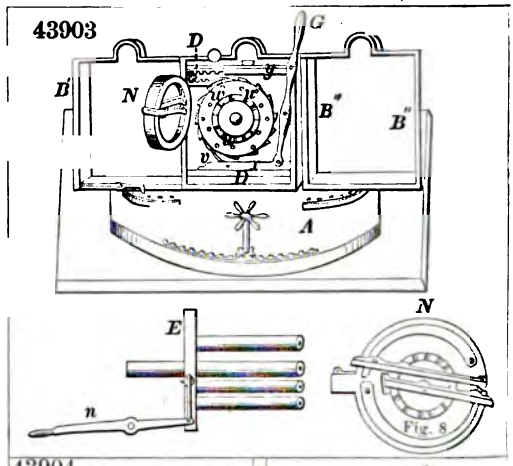

43904

43905

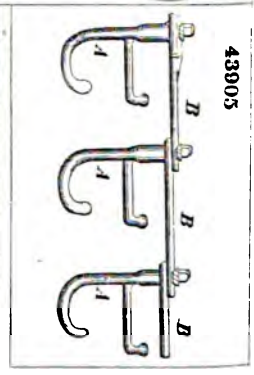

43902

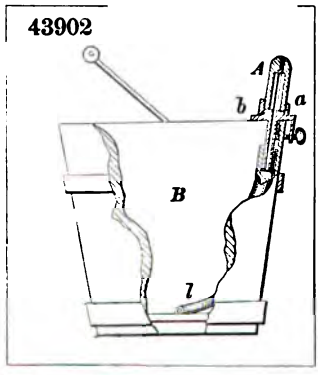

43907

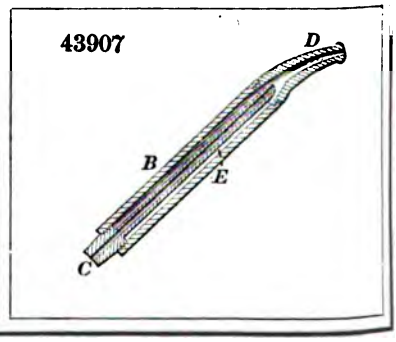

43906

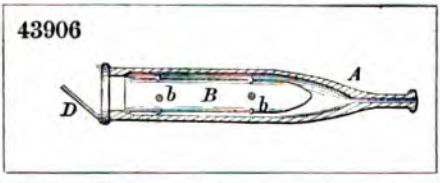

43908

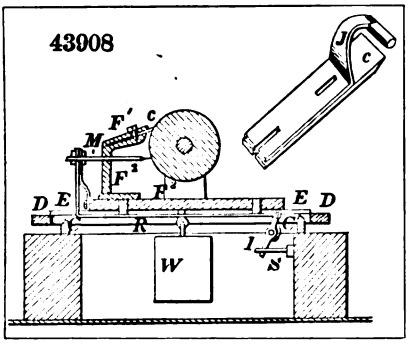

43910

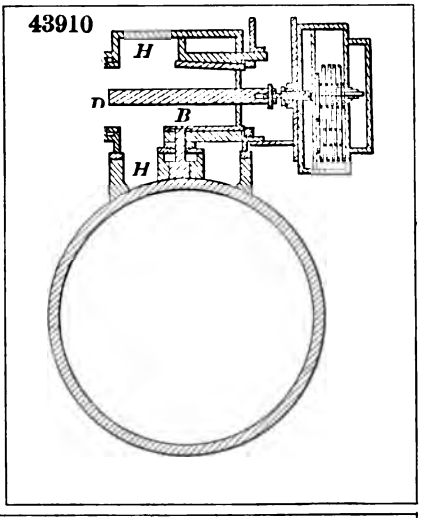

43911

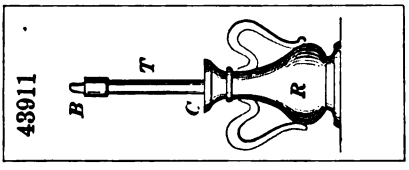

43909

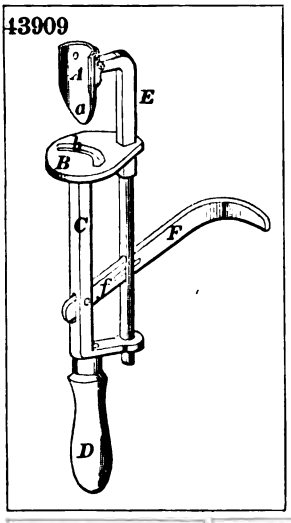

43913

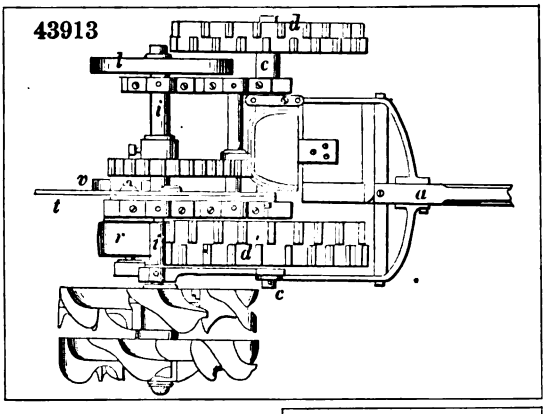

43914

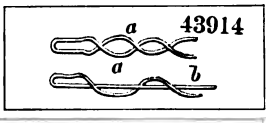

43912

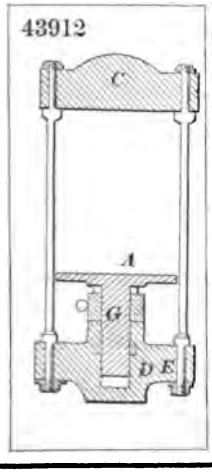

43915

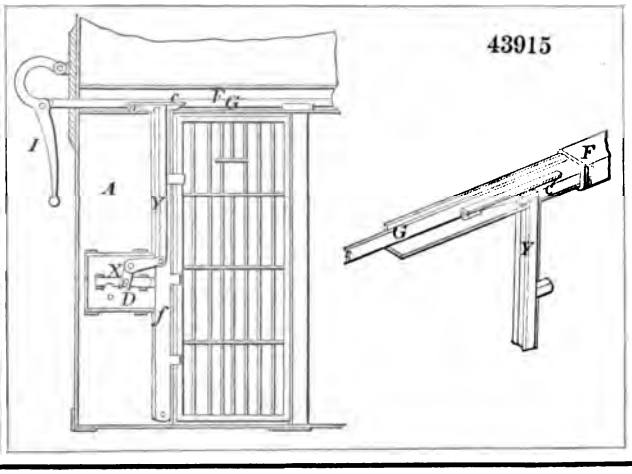

43916

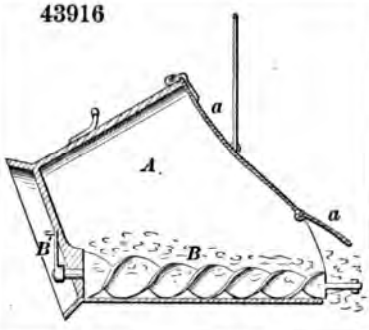

43920

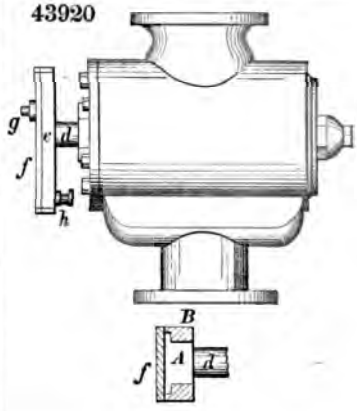

43917

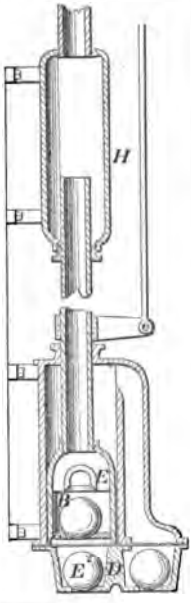

43922

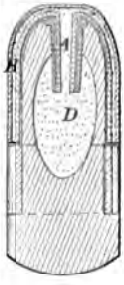

43919

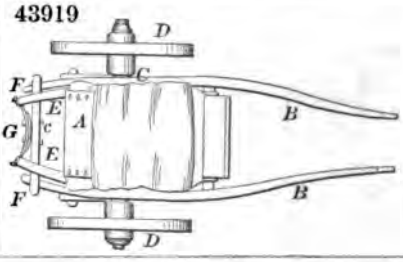

43918

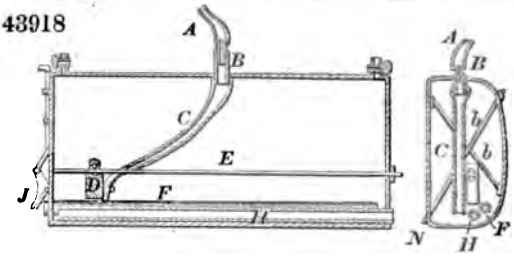

43921

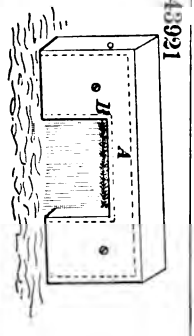

43923

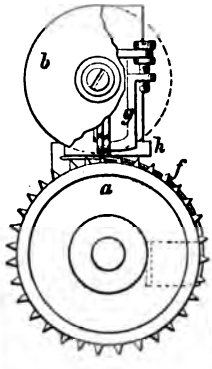

43924

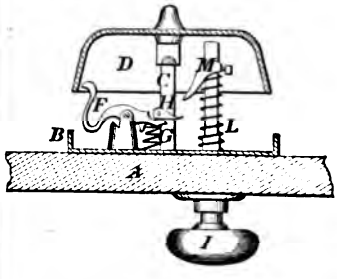

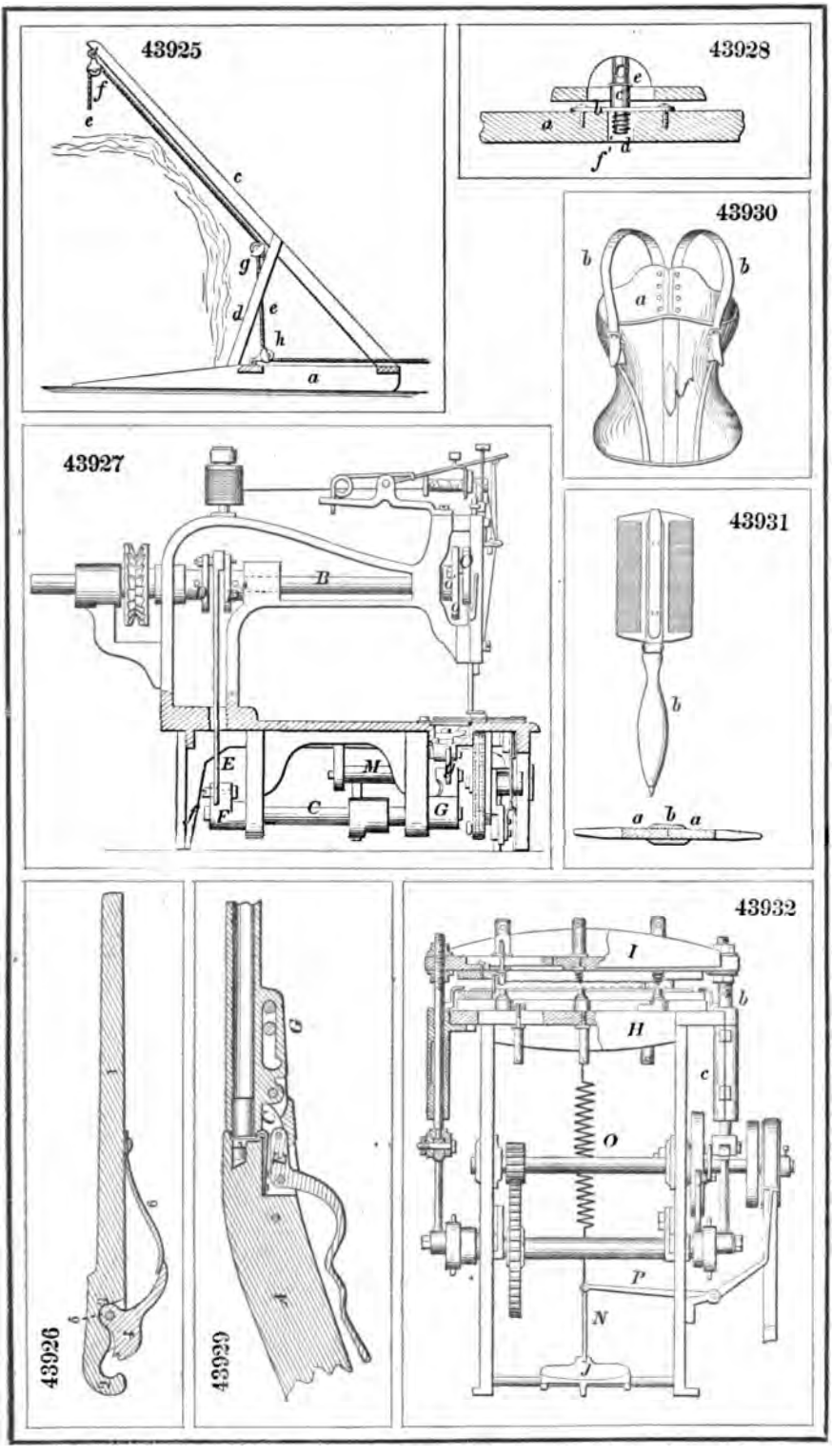
43925
43928
43930
43927
43931
43926
43929
43932

43933

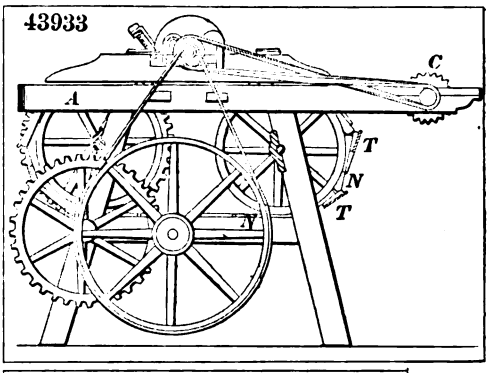

43934

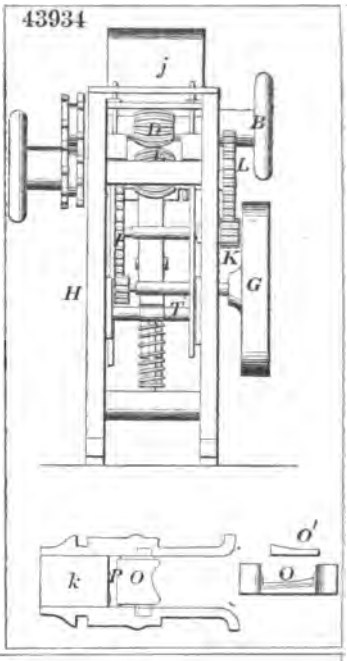

43935

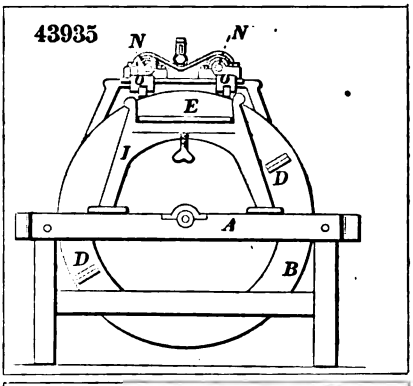

43936

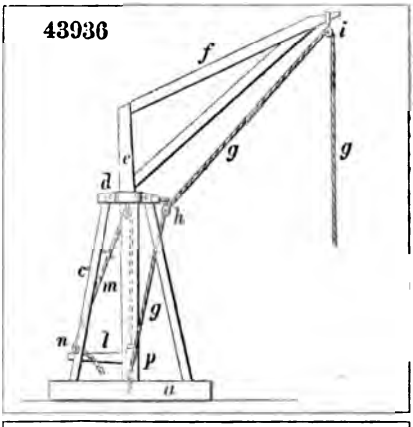

43937

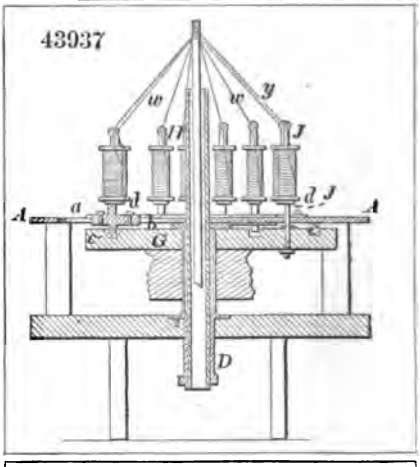

43938

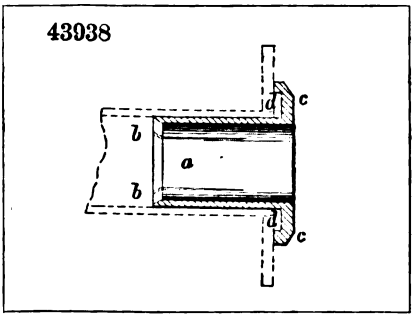

43939

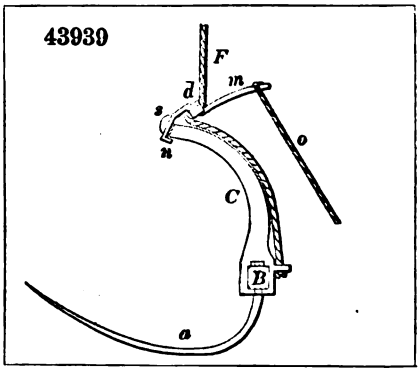

43940

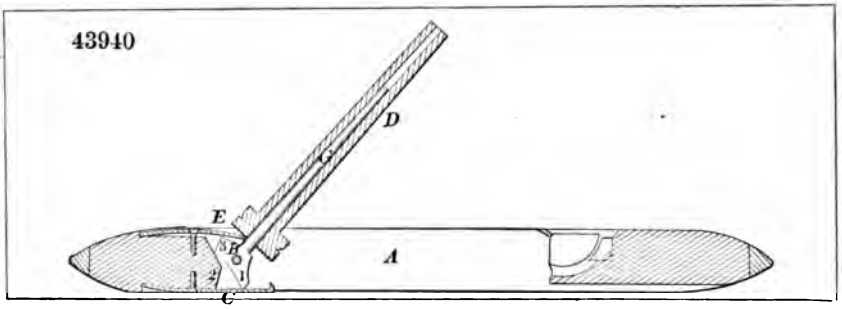

43941

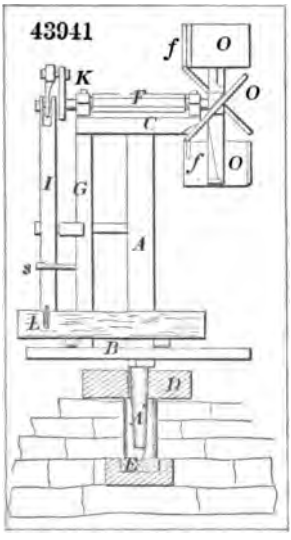

43942

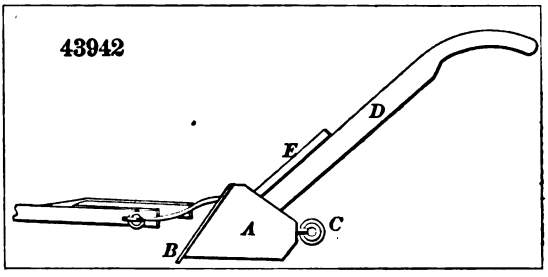

43945

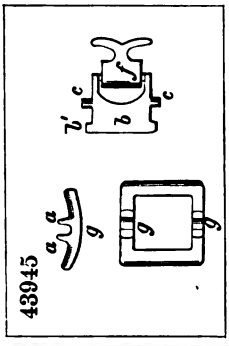

43947

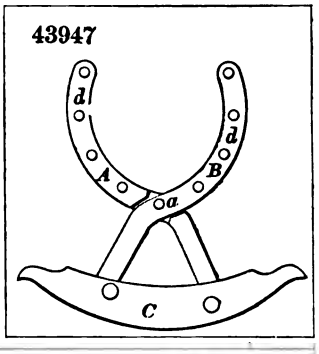

43943

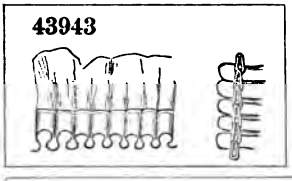

43946

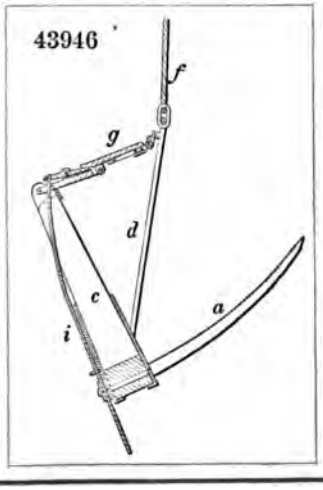

43948

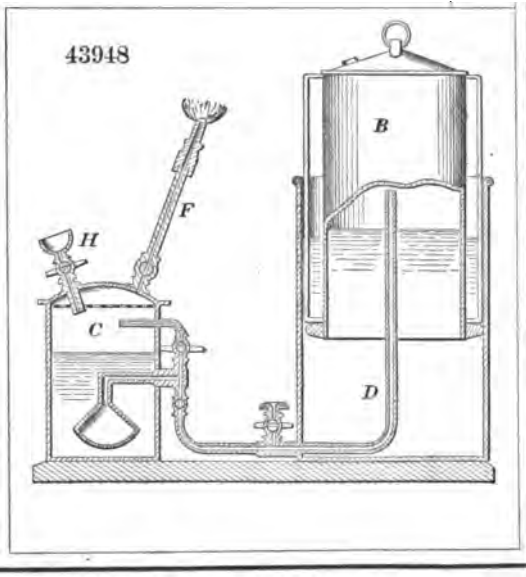

43949

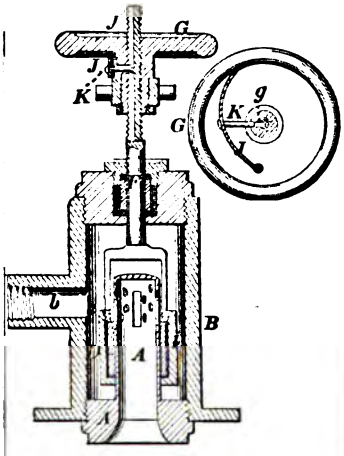

43950

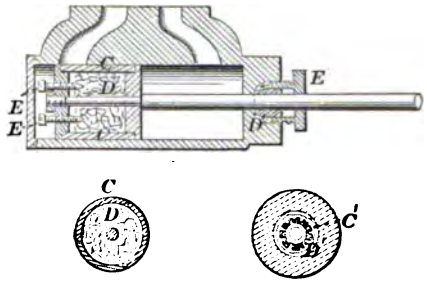

43951

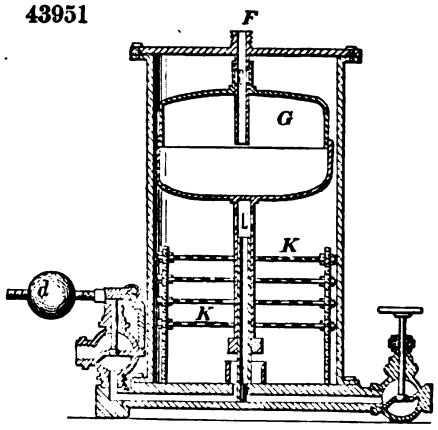

43953

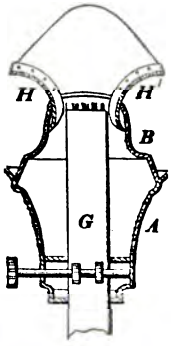

43954

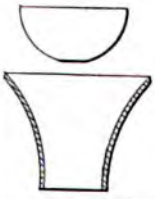

43955

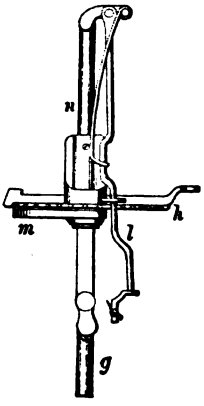

43952

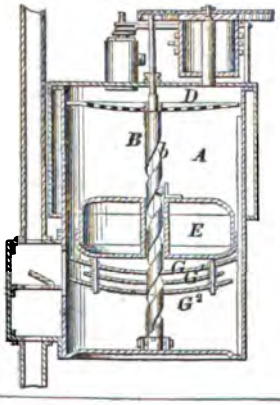

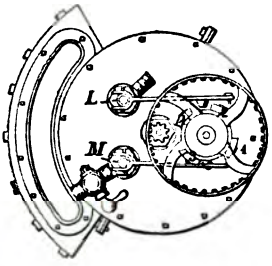

43956

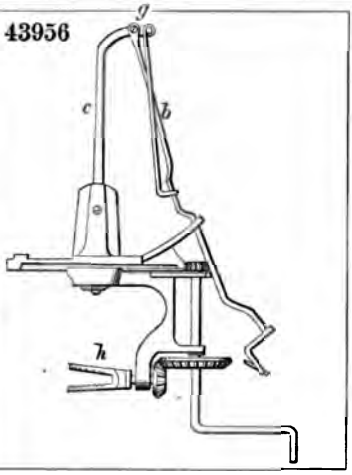

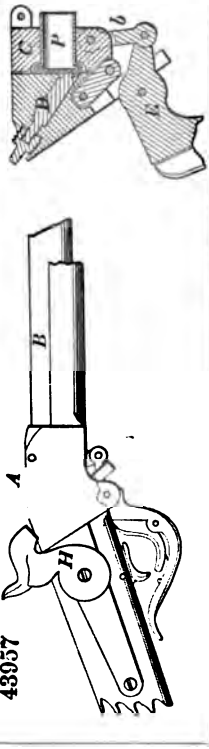

43957

43960

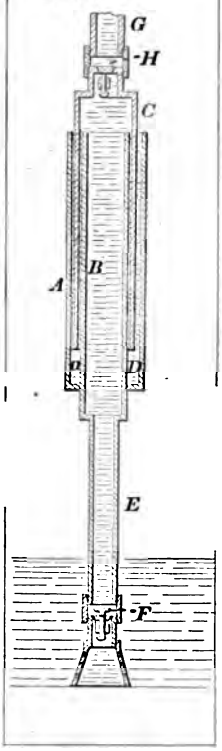

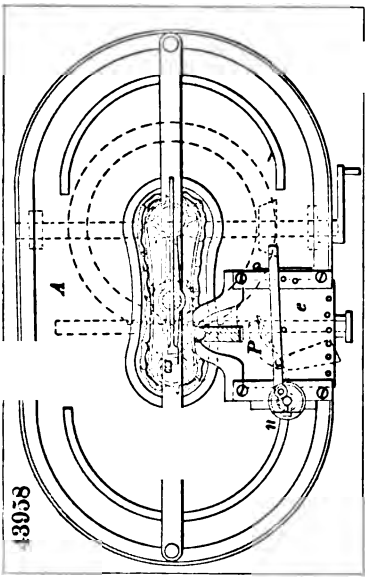

43958

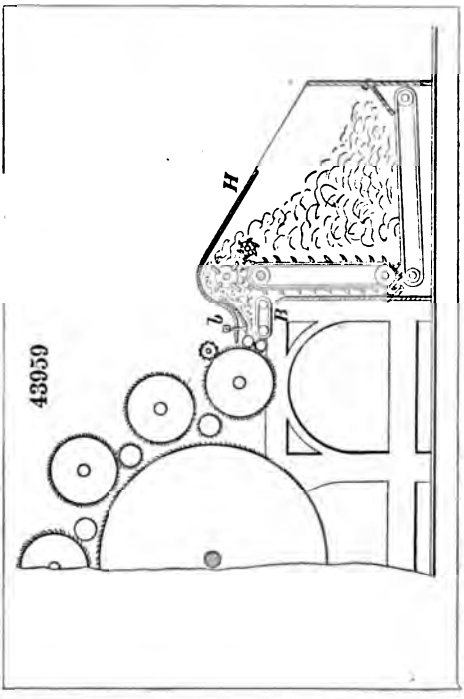

43959

43961

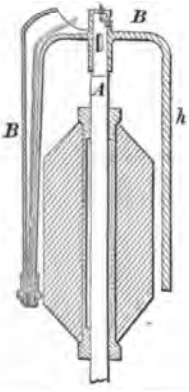

43963

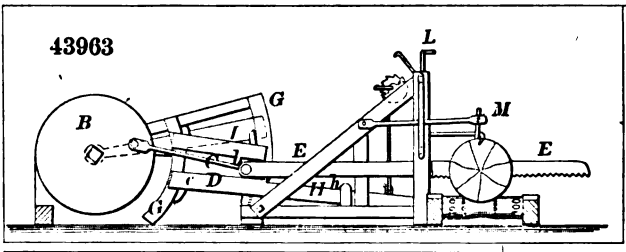

43964

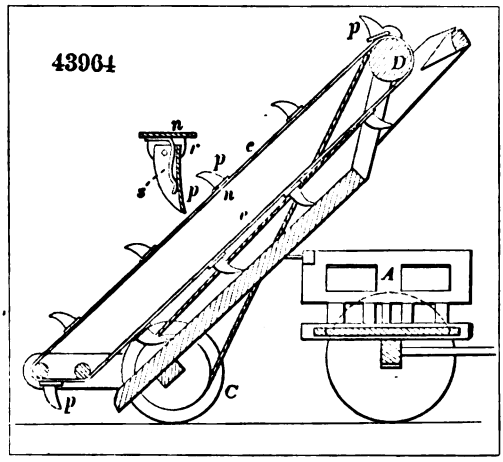

43965

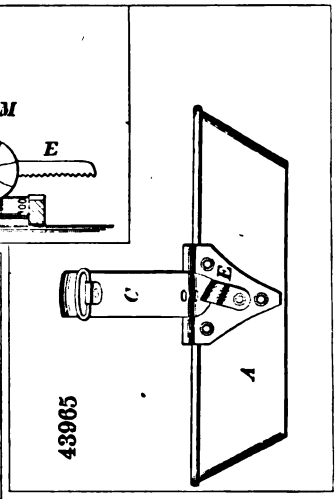

43966

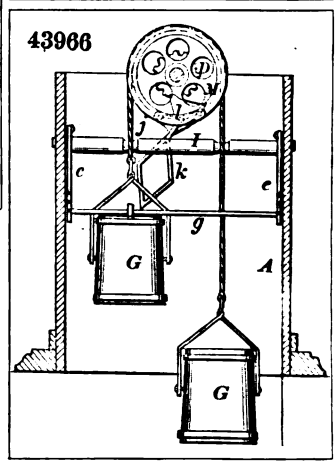

43968

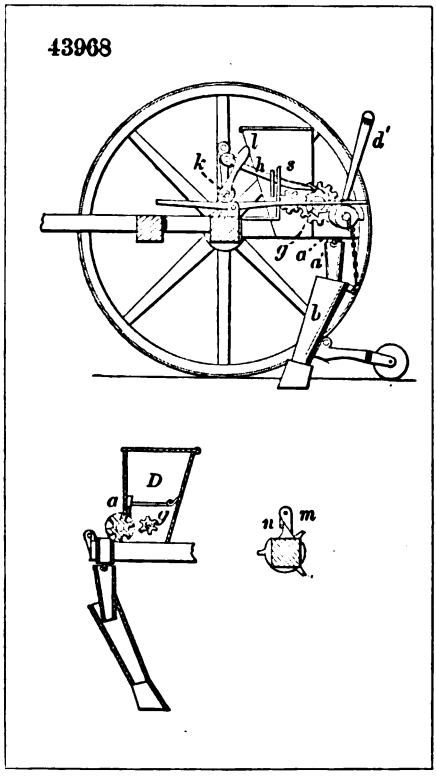

43967

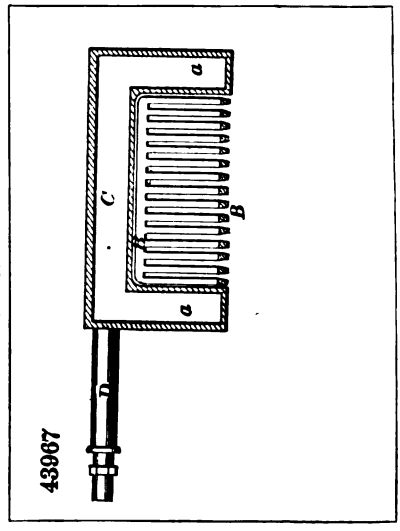

43969

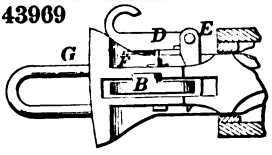

43974

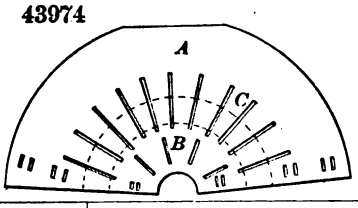

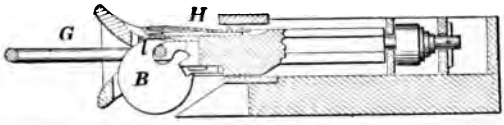

43971

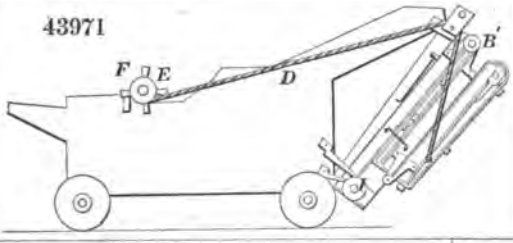

43972

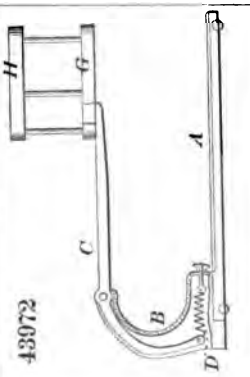

43973

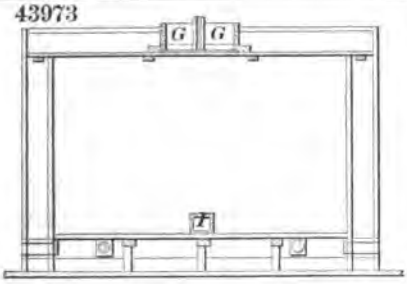

43976

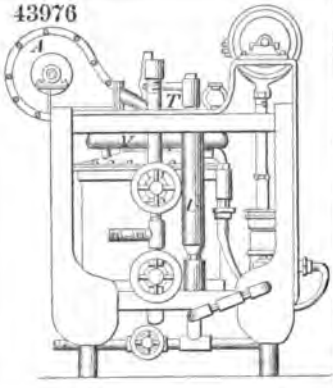

43975

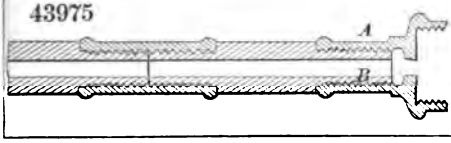

43978

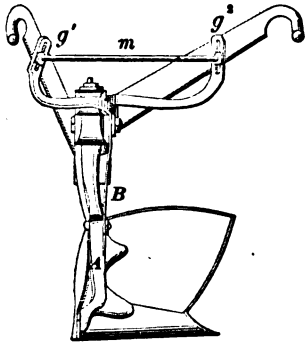

43977

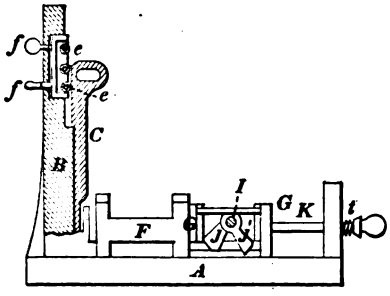

43979

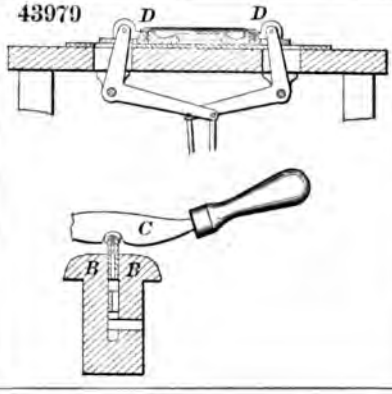

43984

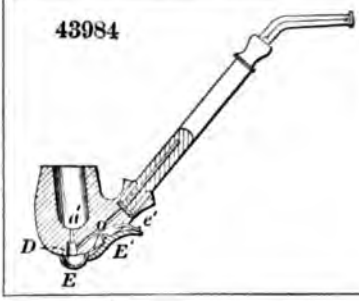

43980

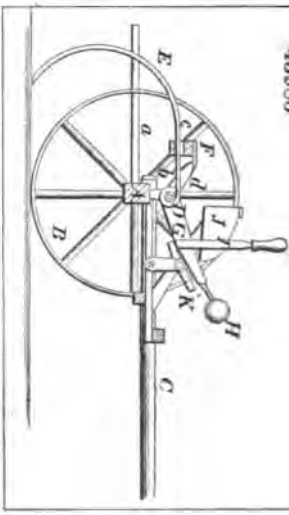

43982

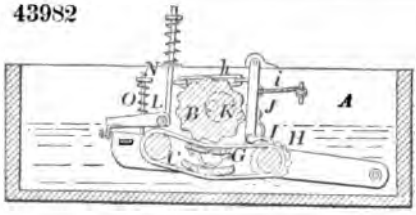

43985

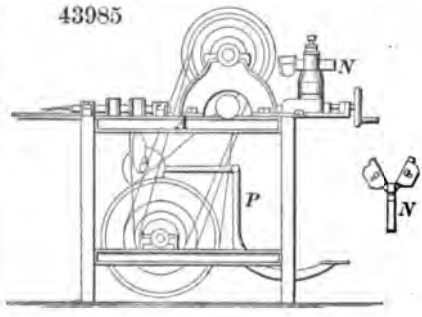

43986

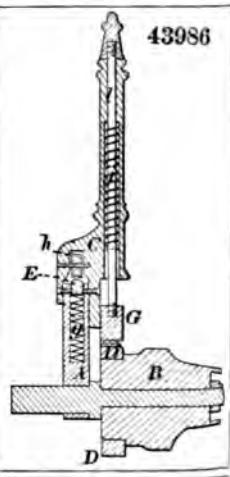

43981

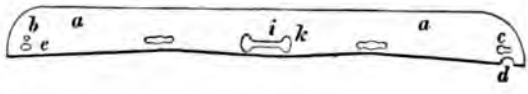

43987

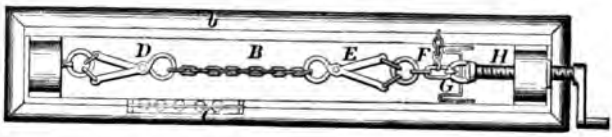

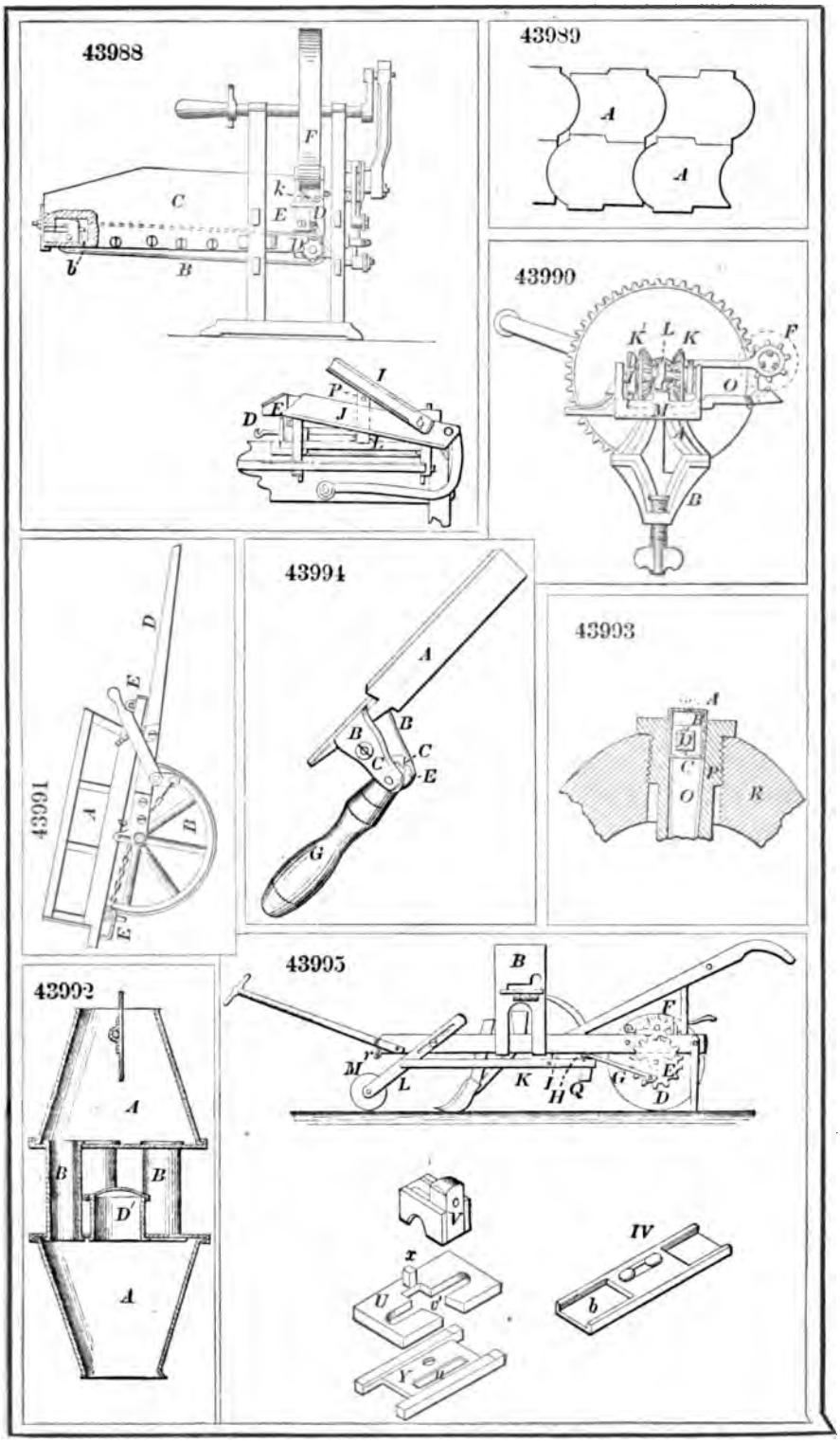
43988
43989
43990
43991
43992
43993
43994
43995

43996

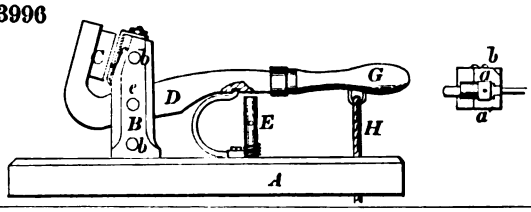

43997

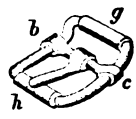

43998

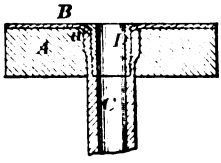

44000

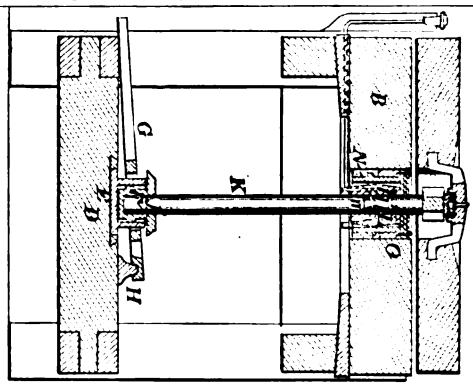

43999

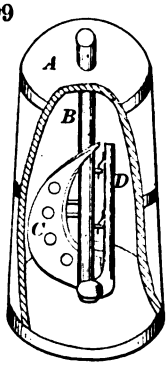

44002

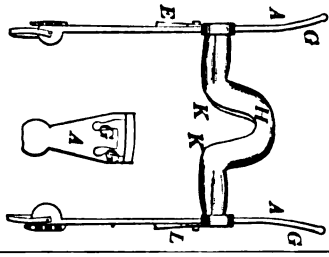

44003

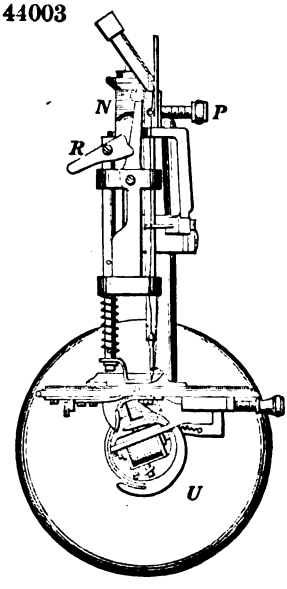

44004

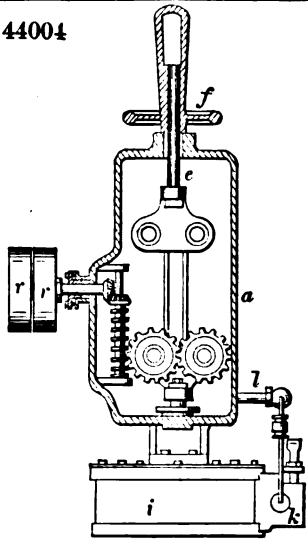

44005

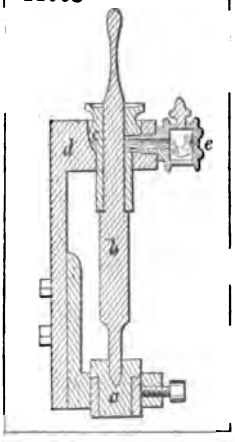

44006

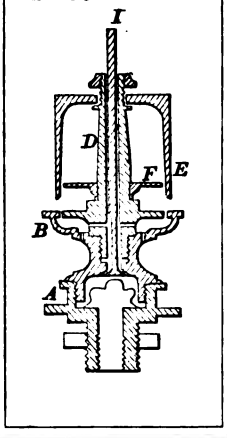

44007

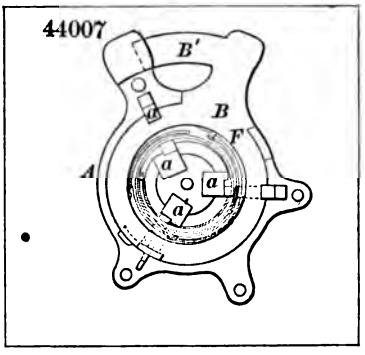

44010

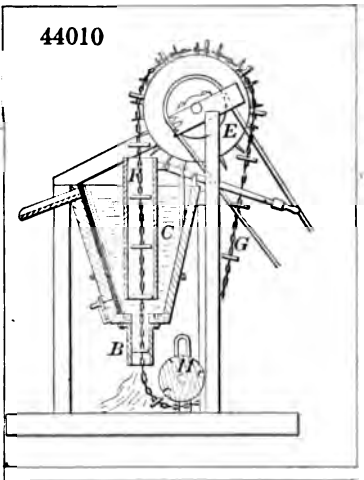

44011

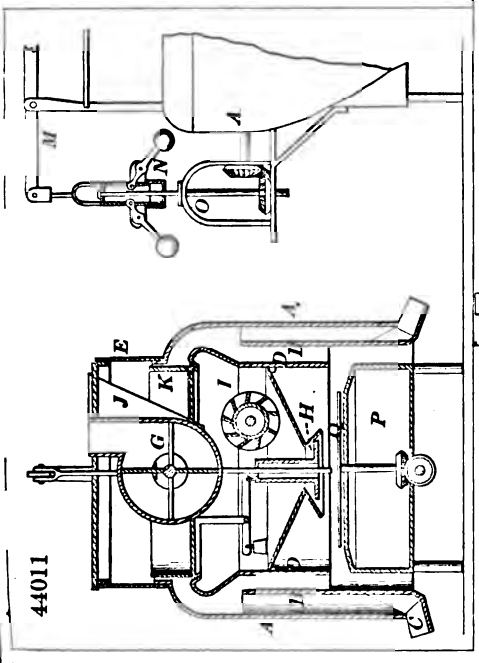

44009

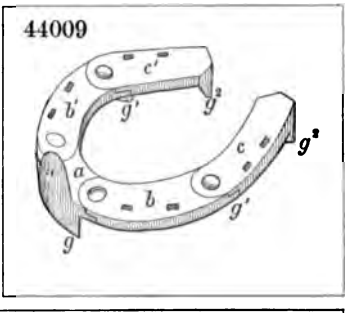

44008

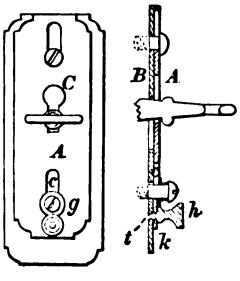

44012

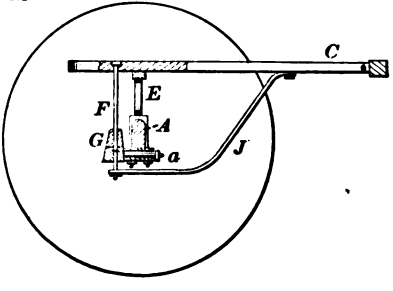

44013

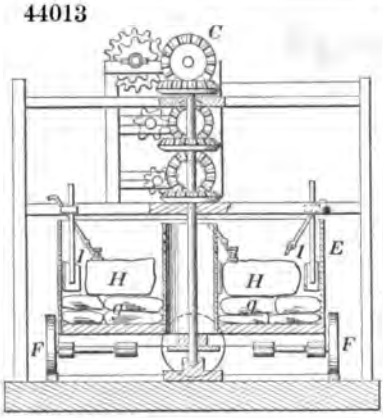

44014

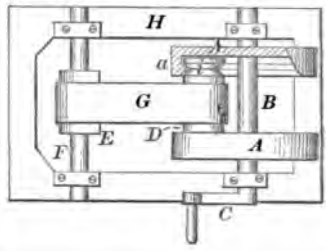

44015

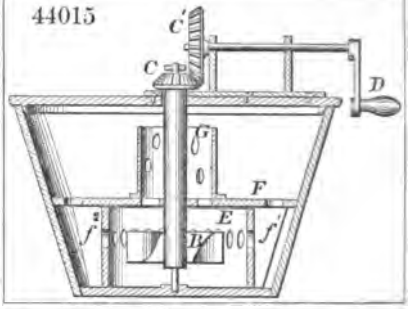

44018

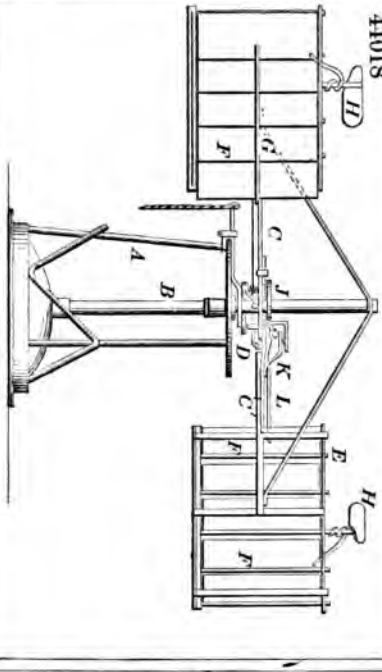

44016

44017

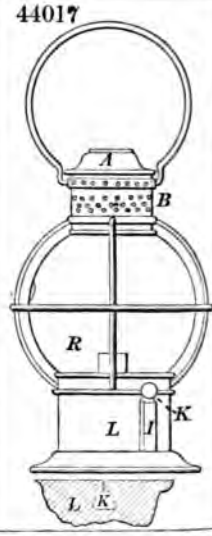

44019

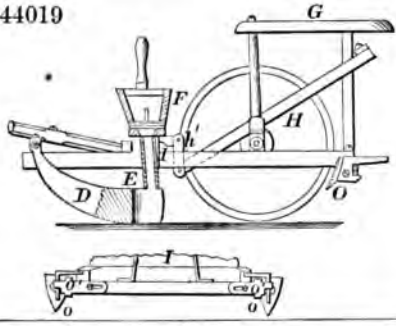

44020

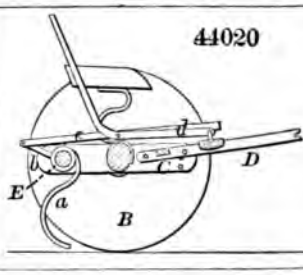

44021

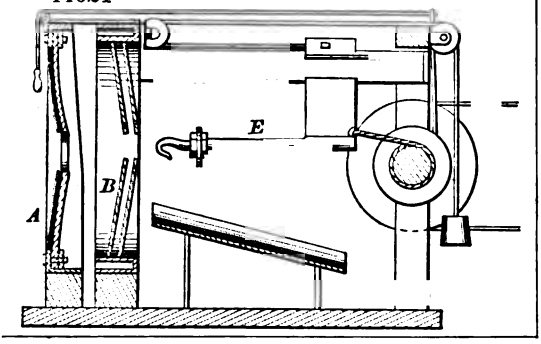

44023

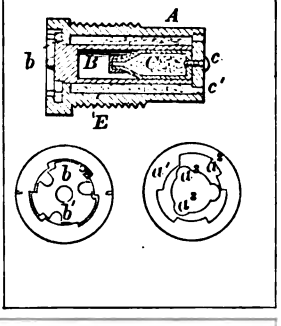

44022

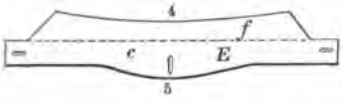

44024

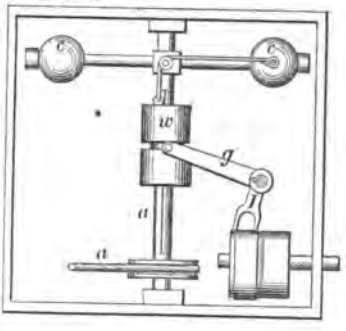

44026

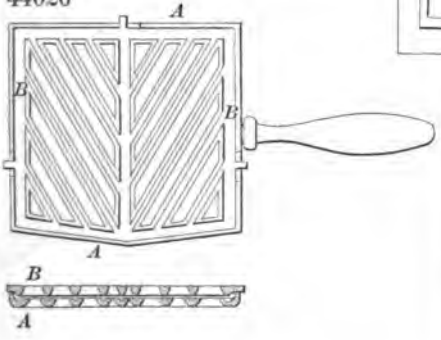

44027

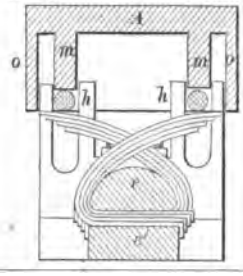

44028

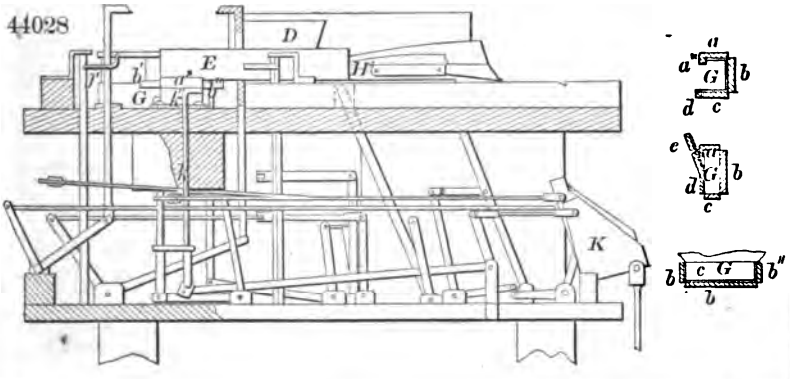

44029

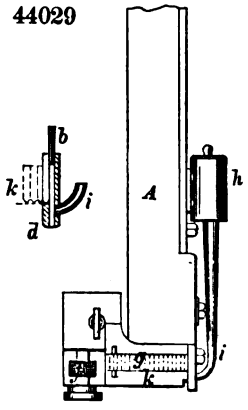

44032

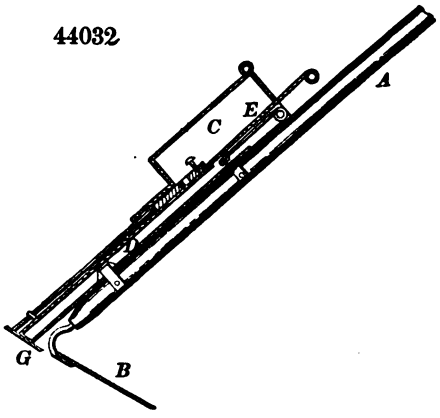

44030

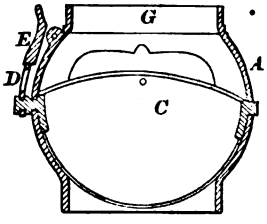

44034

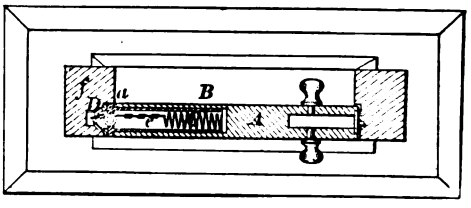

44031

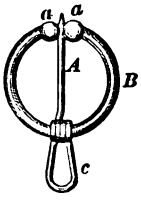

44035

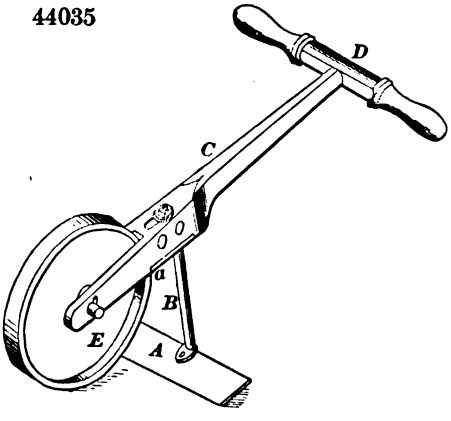

44033

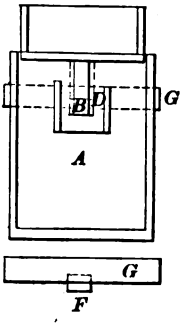

44036

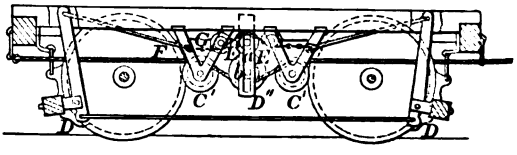

44037

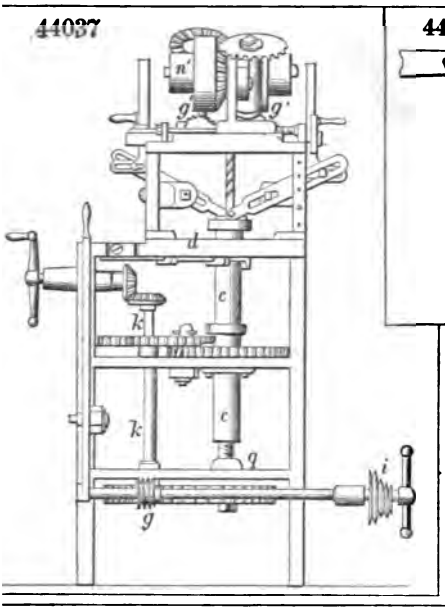

44038

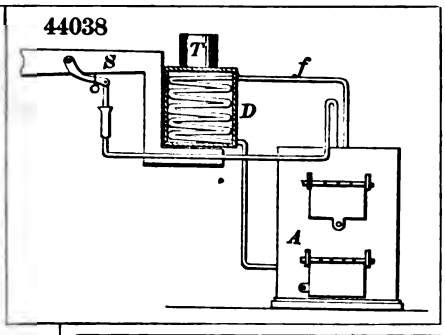

44040

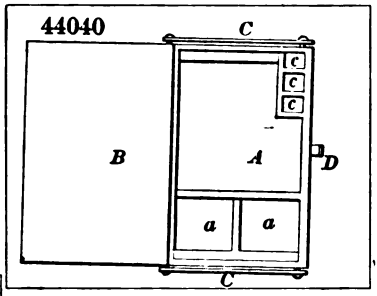

44039

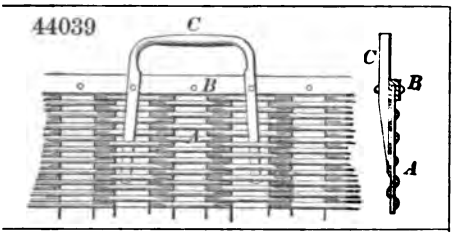

44042

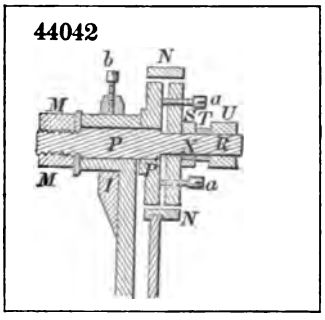

44041

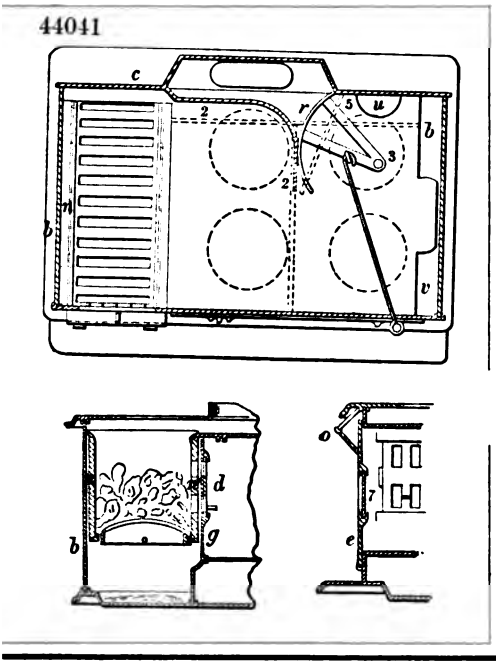

44043

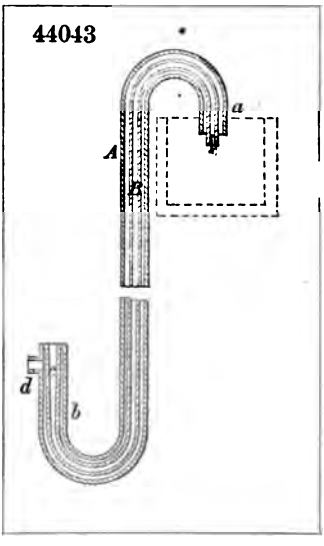

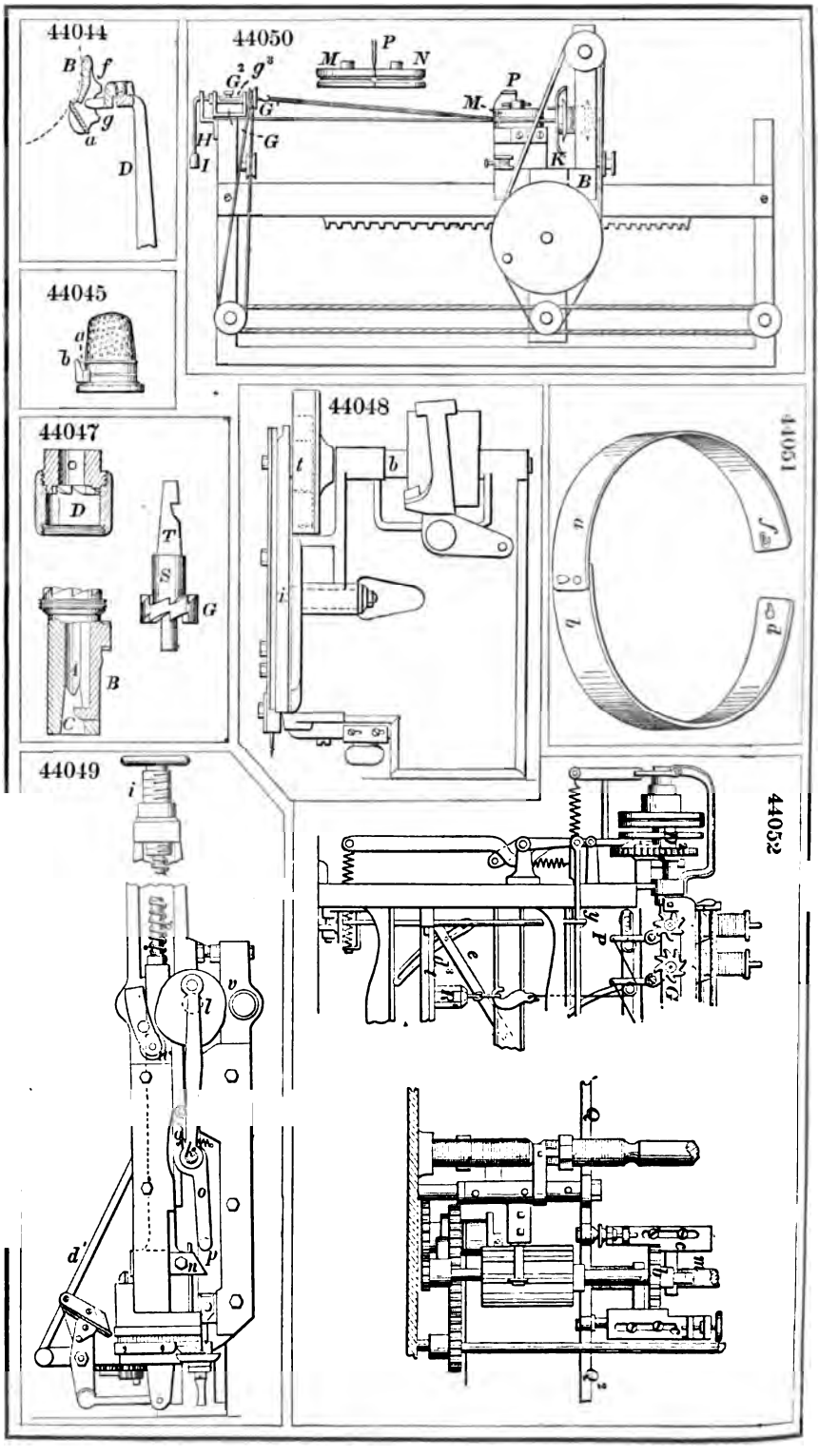
44044
44045
44047
44048
44049
44050
44051
44052

44054

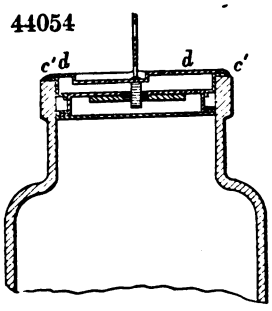

44058

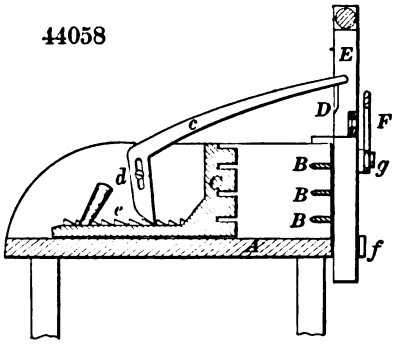

44055

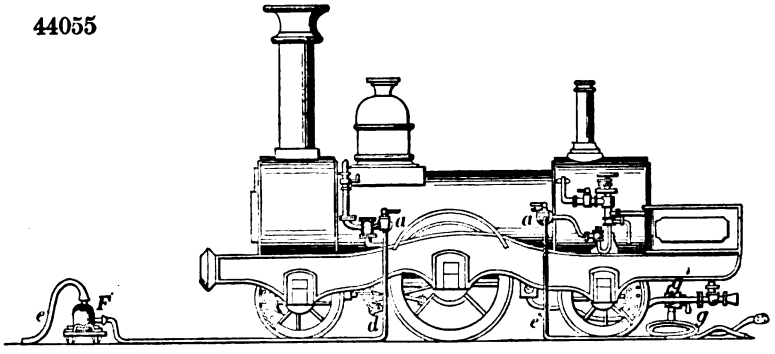

44057

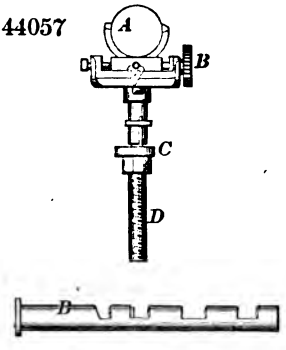

44056

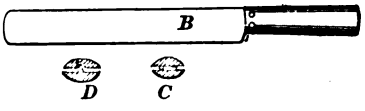

44060

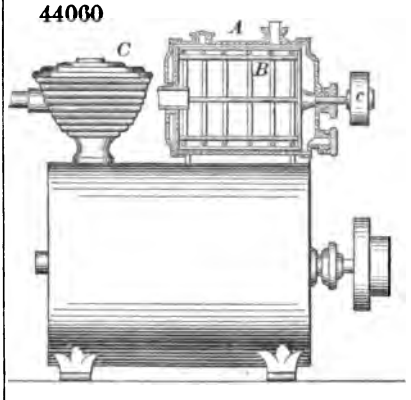

44059

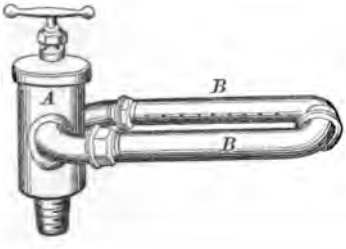

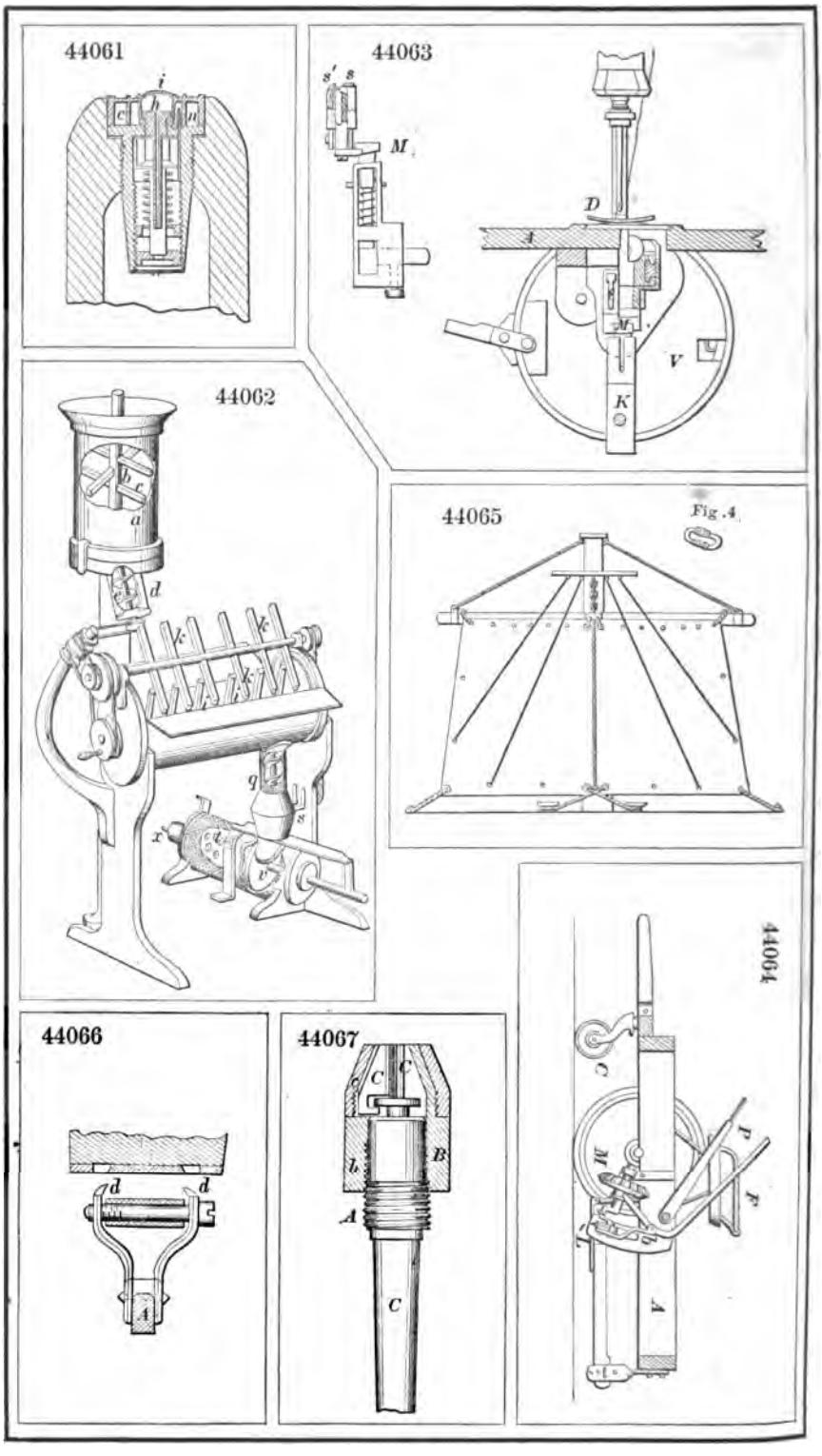
44061
44063
44062
44065
Fig. 4
44064
44066
44067

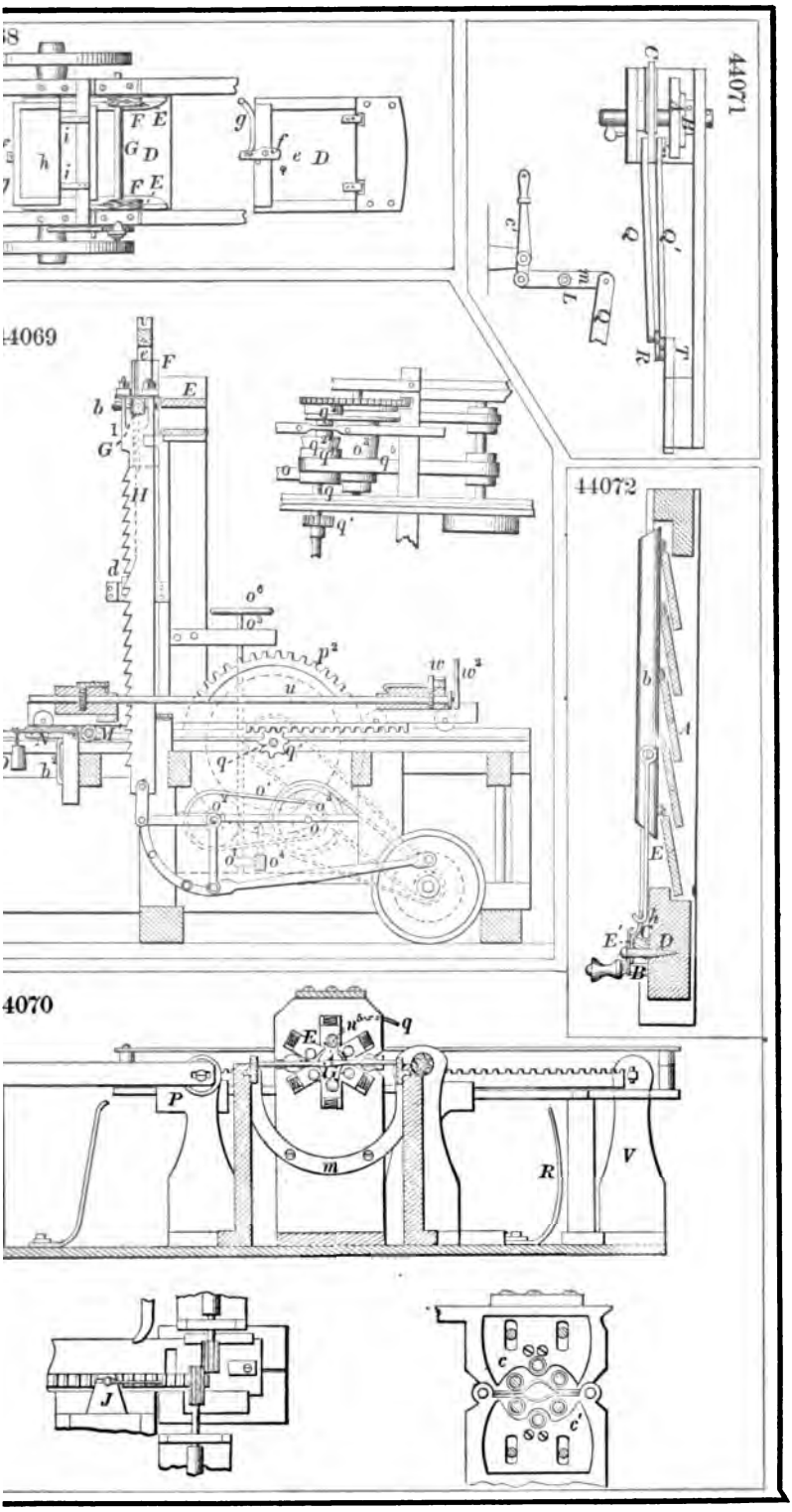
44071
44069
44072
44070

44073

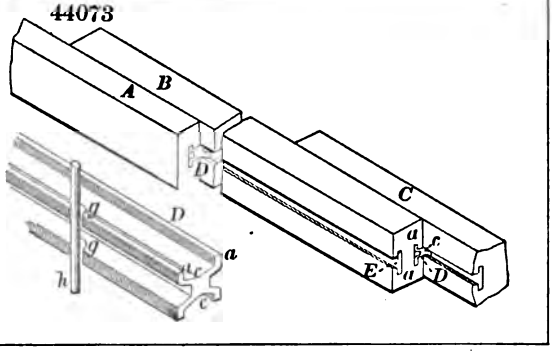

44074

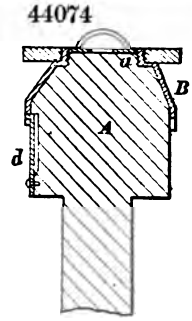

44075

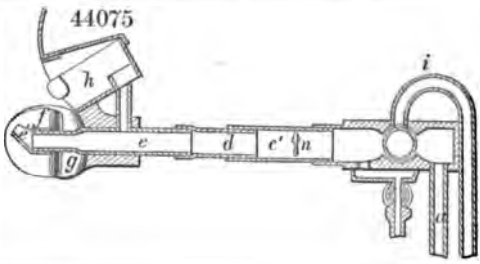

44076

44077

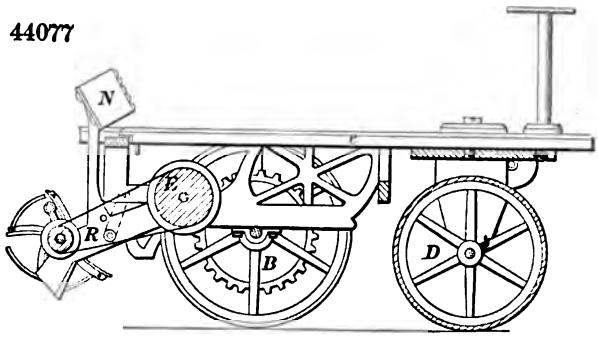

44078

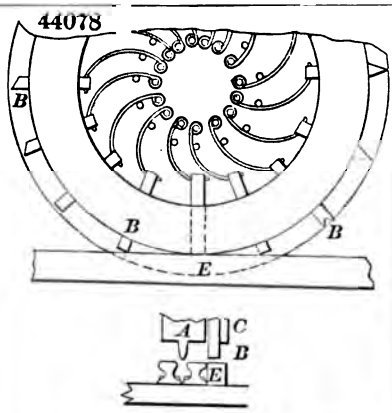

44079

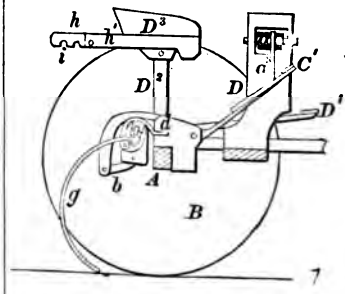

44080

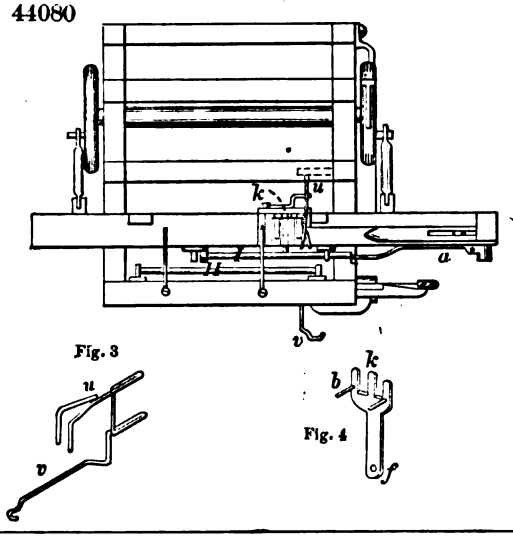

44081

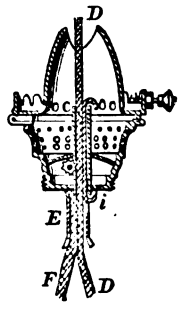

44082

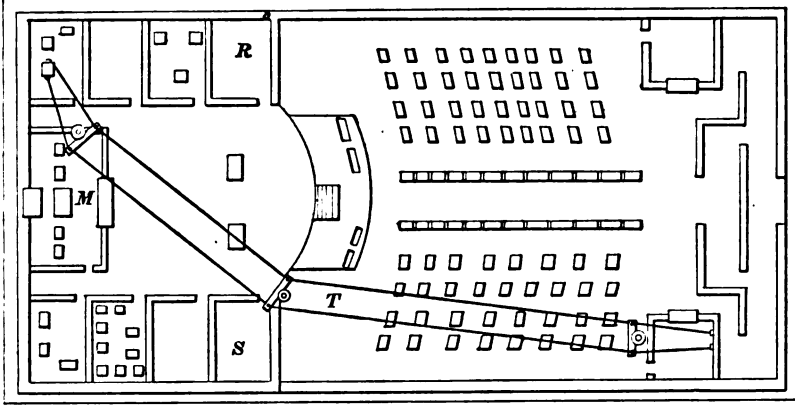

44083

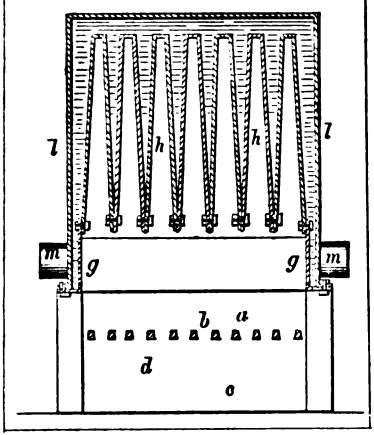

44084

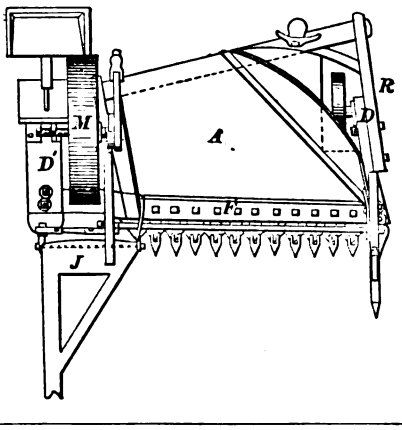

44085

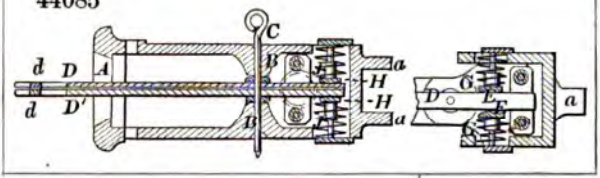

44087

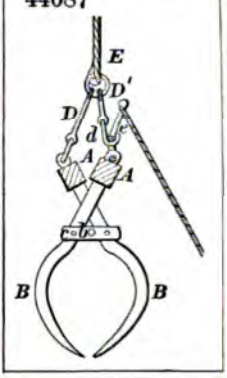

44088

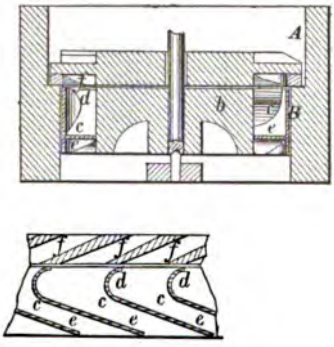

44091

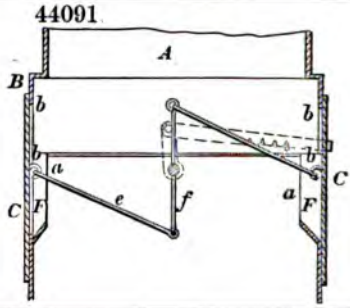

44089

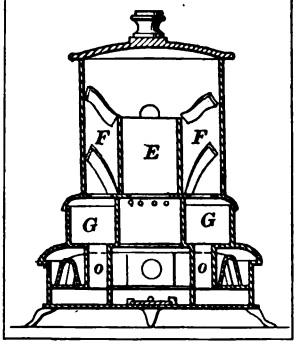

44090

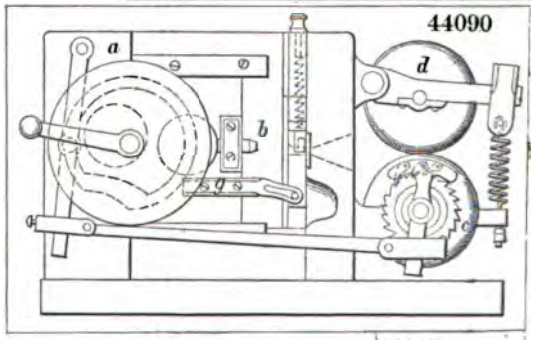

44092

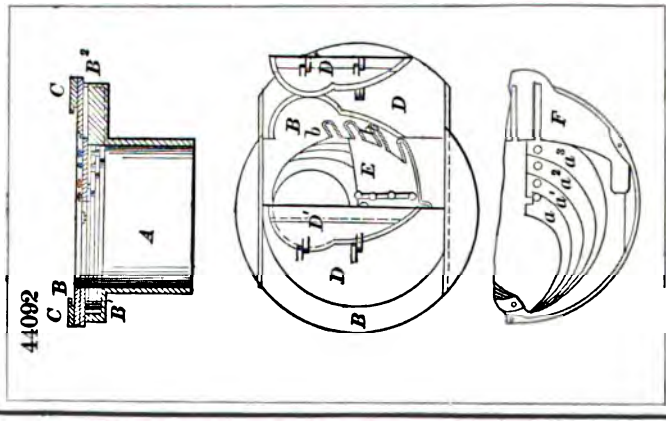

44093

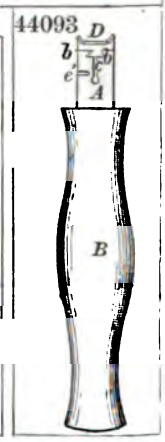

44094

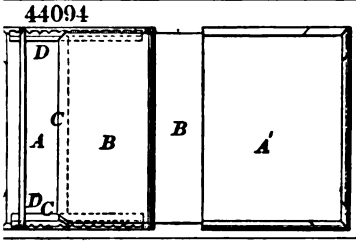

44098

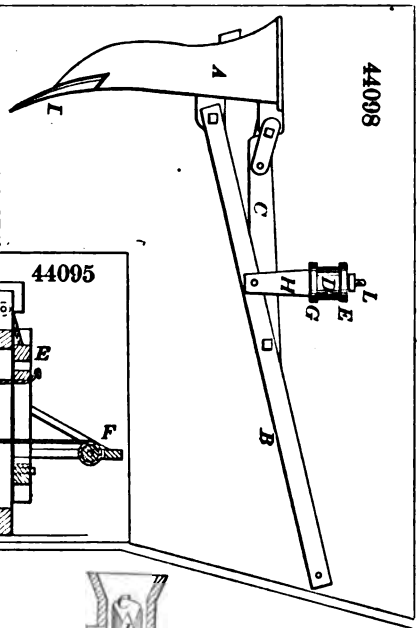

44095

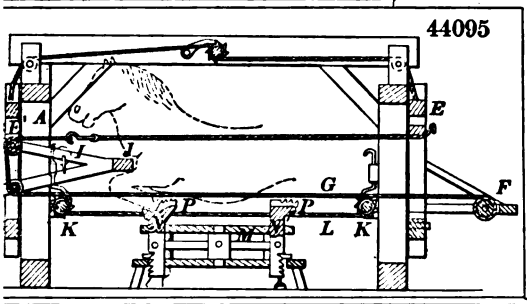

44096

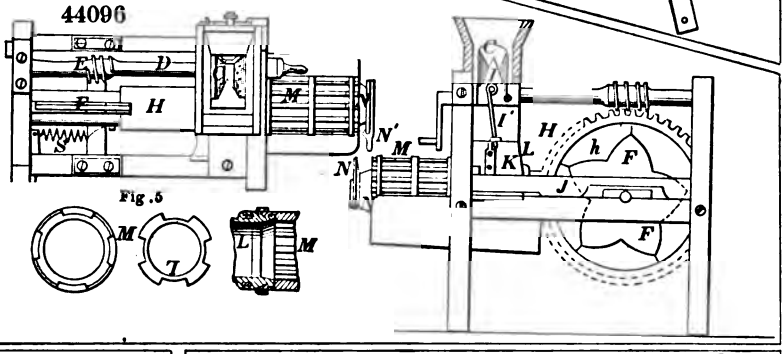

44097

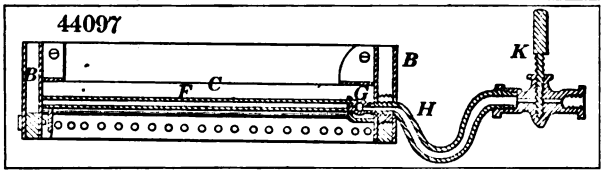

44099

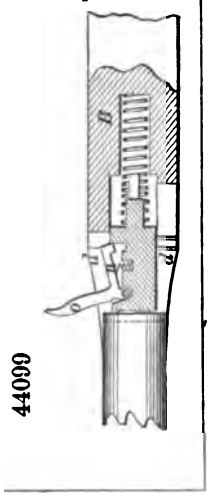

44100

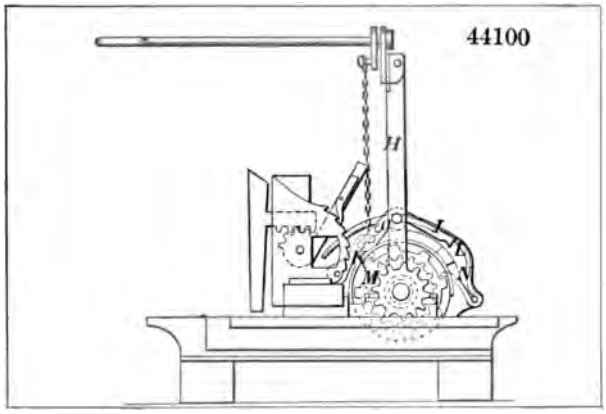

44101

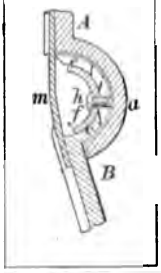

44103

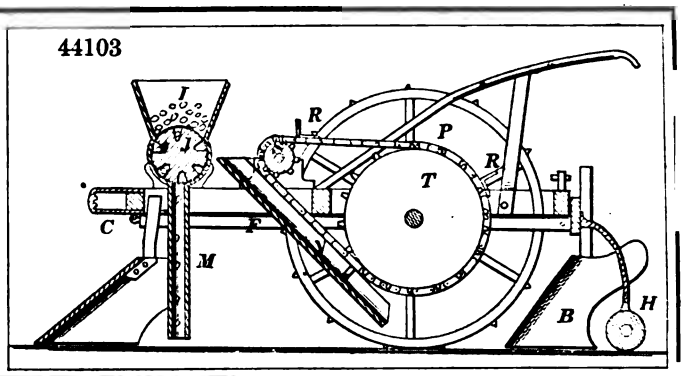

44105

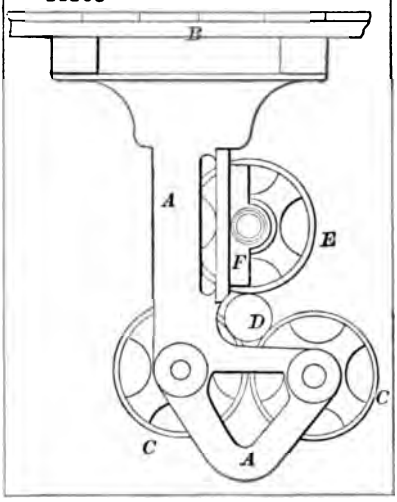

44104

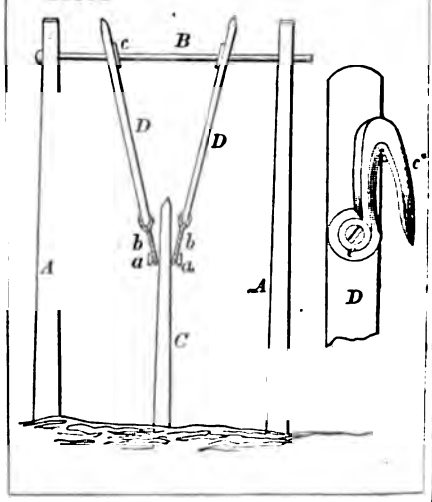

44107

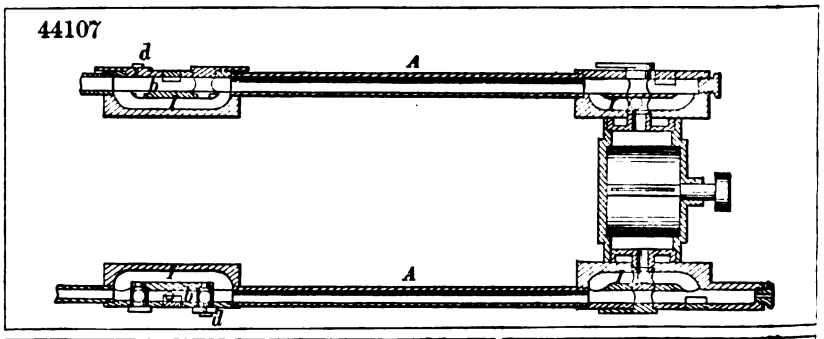

44102

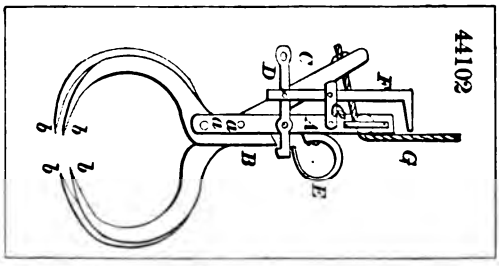

44108

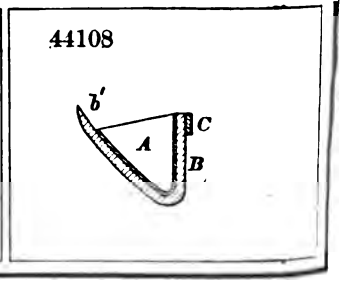

44109

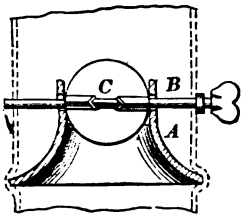

44111

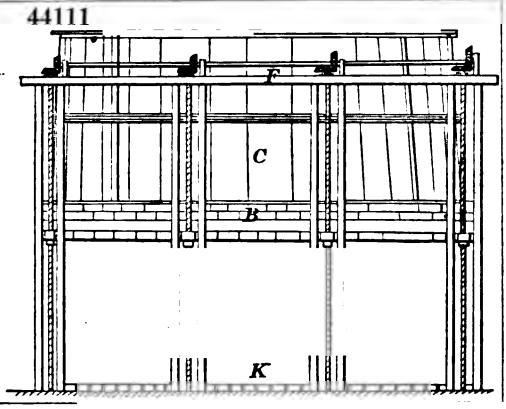

44115

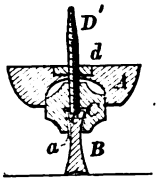

44110

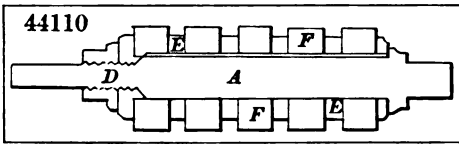

44114

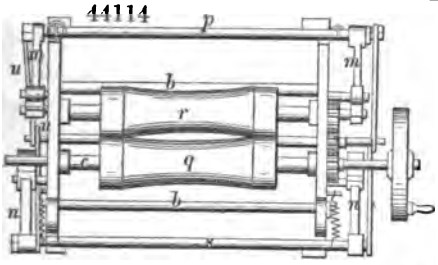

44113

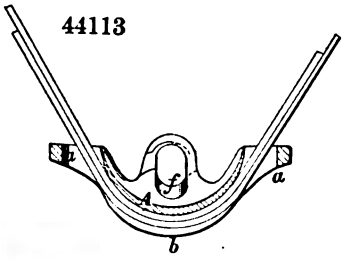

44116

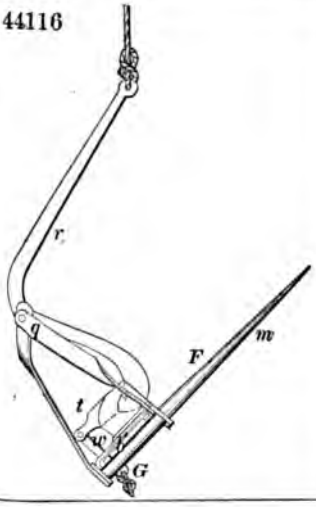

44118

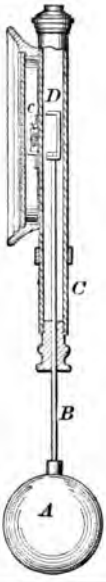

44119

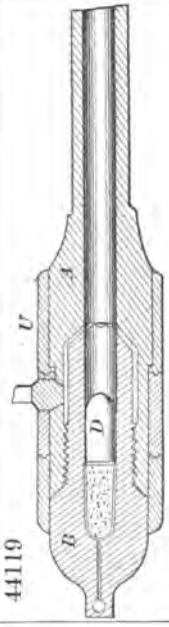

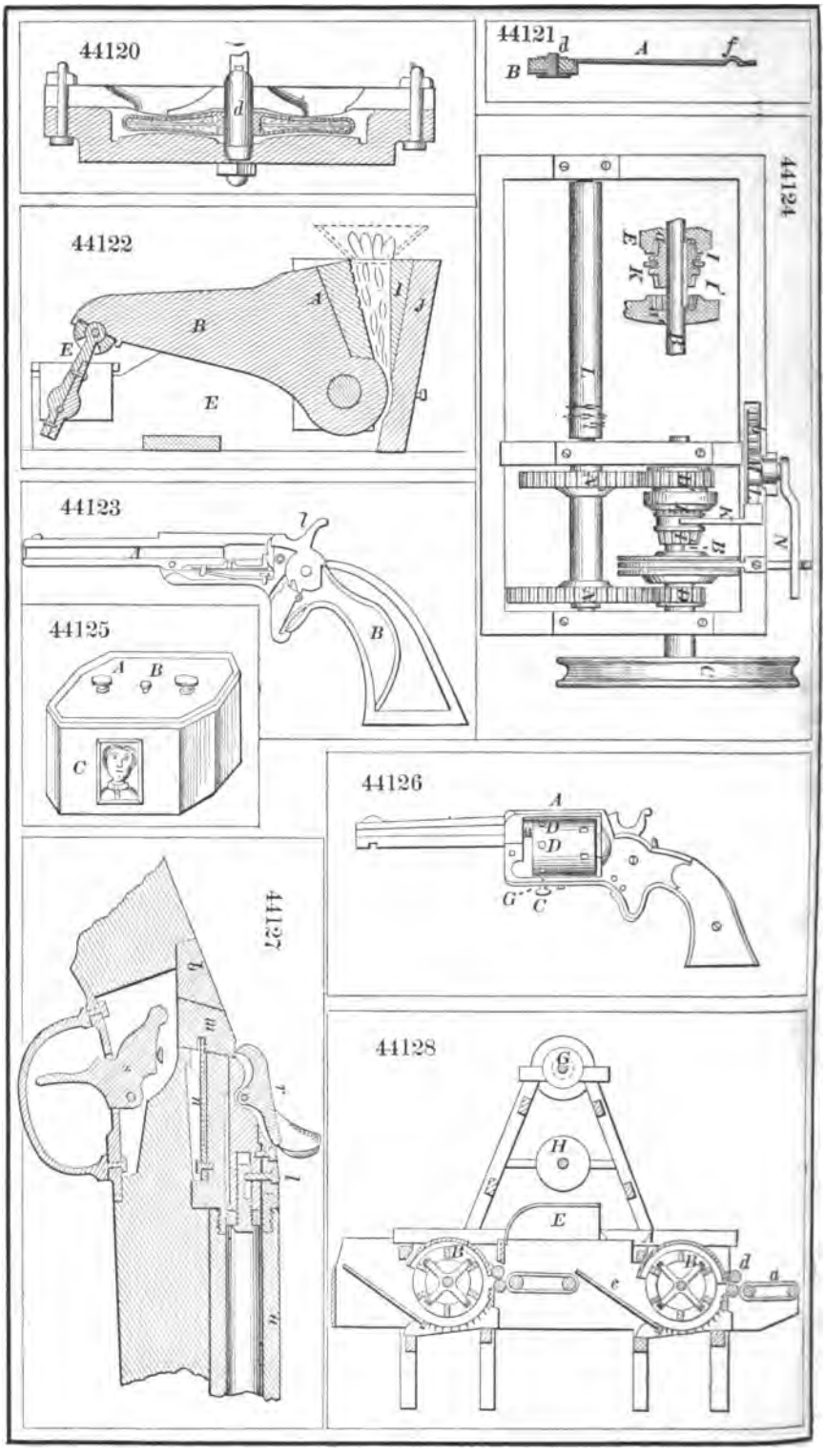
44120
44121
44122
44123
44124
44125
44126
44127
44128

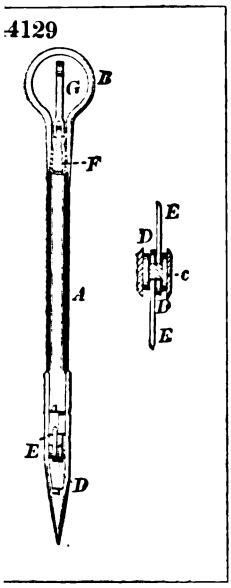
4129
G
B
F
E
D
c
A
E
E
D

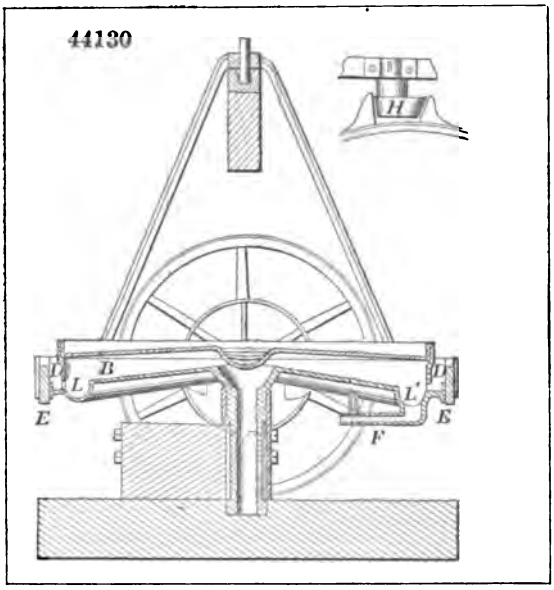
44130
H
B
L
L'
D
E
E
F

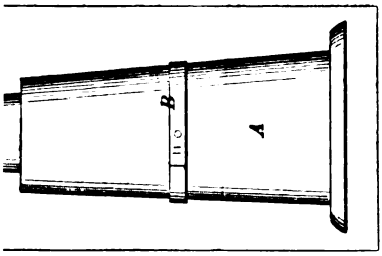
B
A

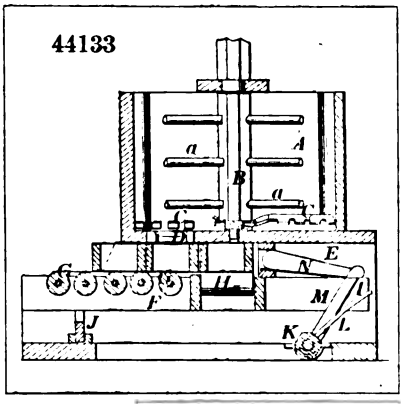
44133
a
A
B
a
E
N
G
H
F
M
J
K
L

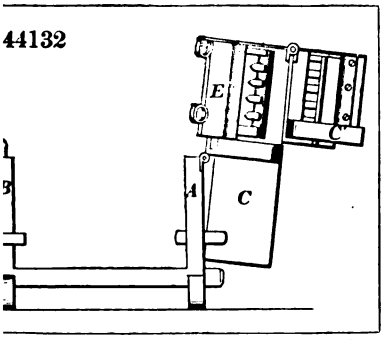
44132
E
C
A
C

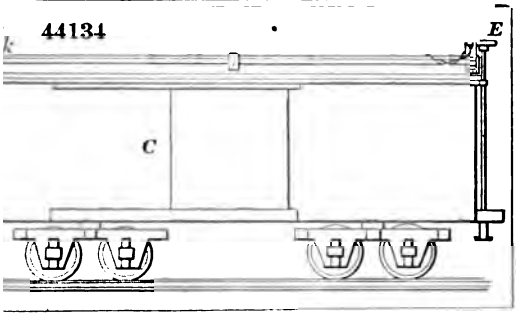
44134
E
C

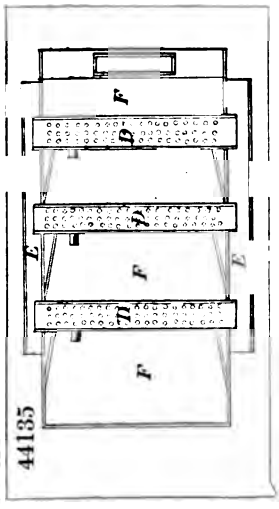
F
D
E
F
E
D
F
44135

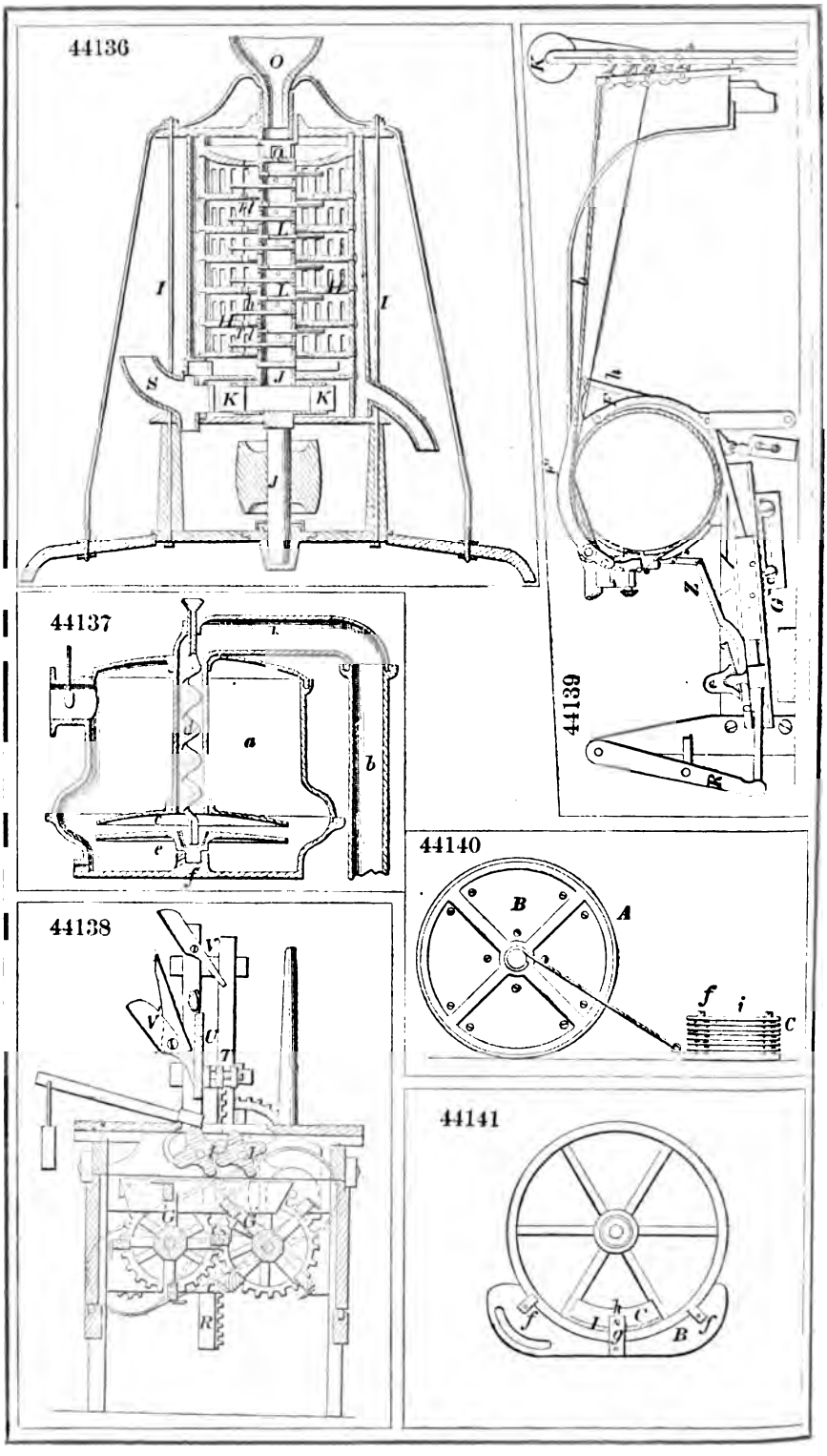
44136
44137
44138
44139
44140
44141

44142

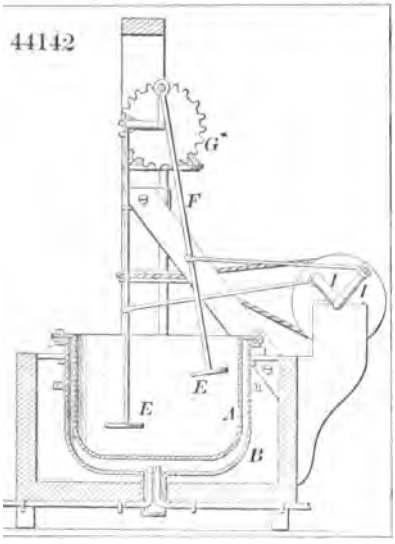

44143

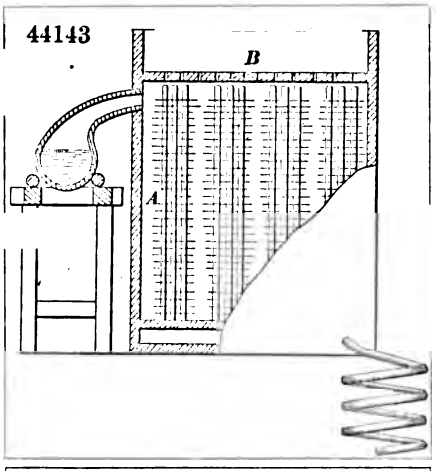

44146

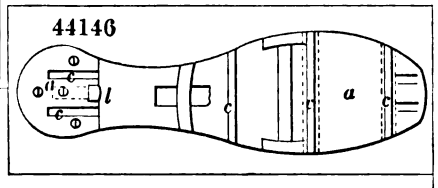

44145

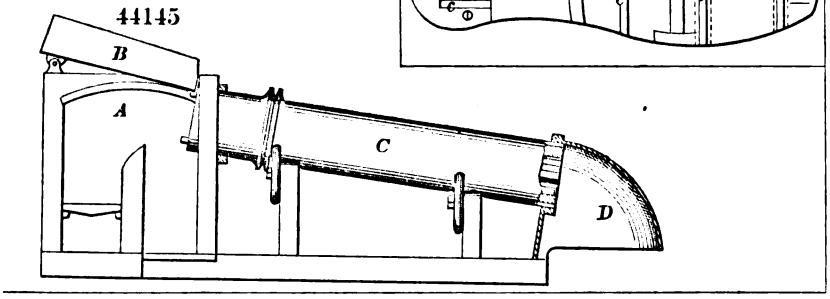

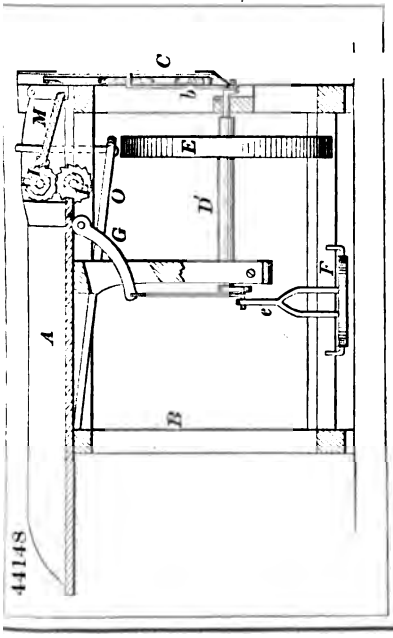

44148

44144

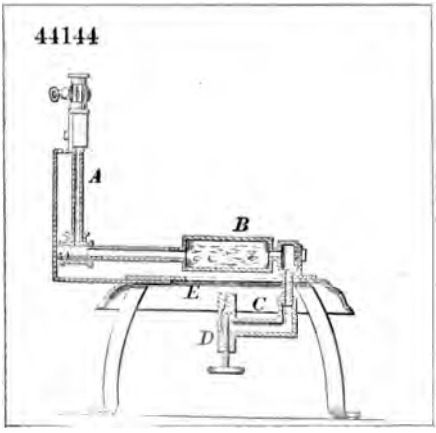

44149

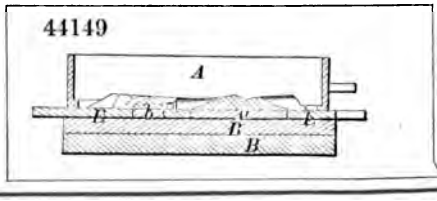

44150

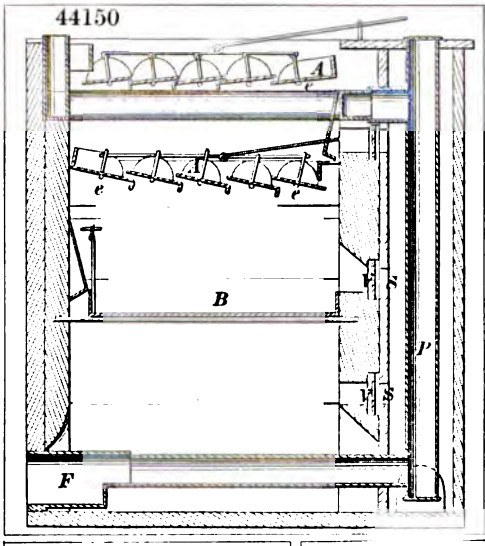

44153

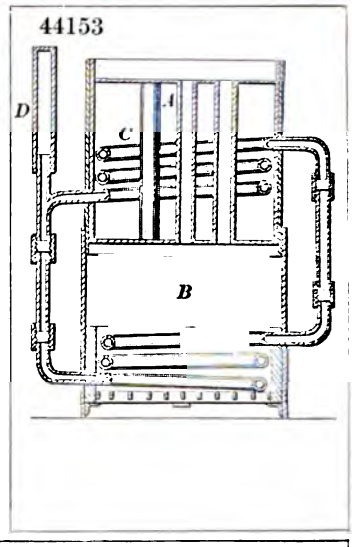

44151

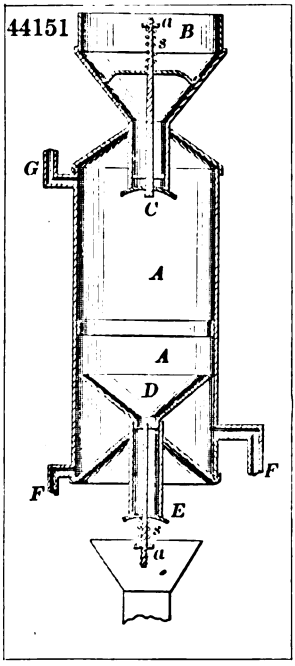

44152

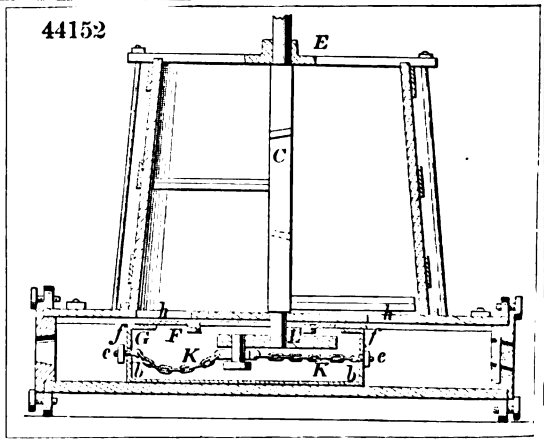

44154

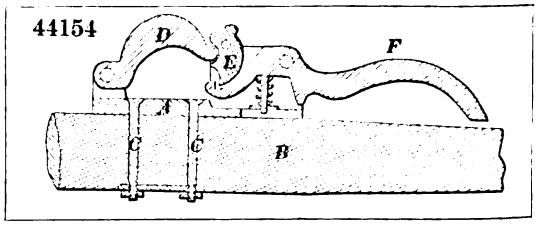

44155

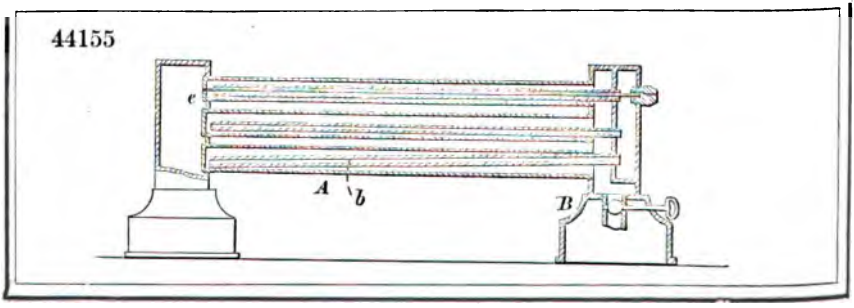

44156

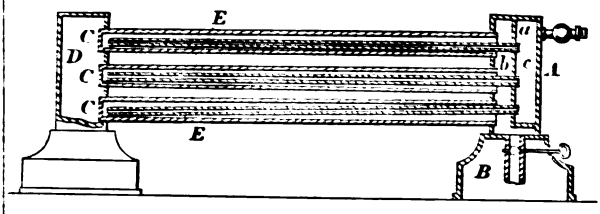

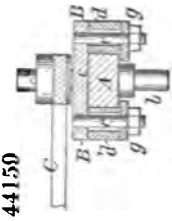

44158

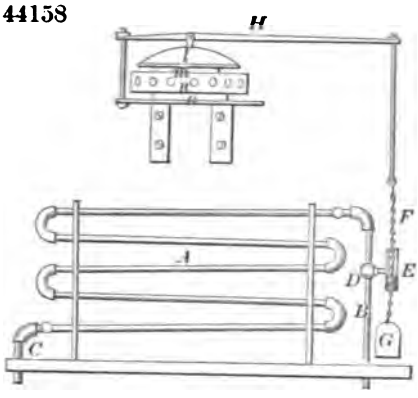

44157

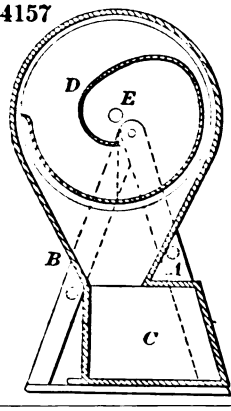

44162

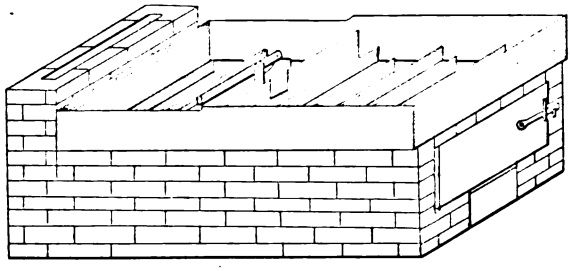

44161

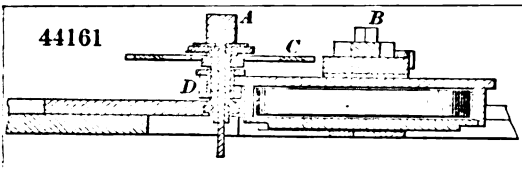

44164

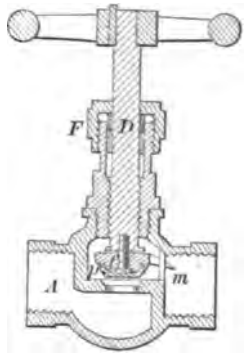

44163

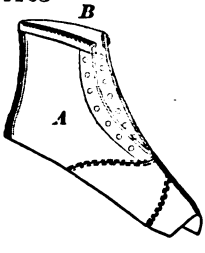

44160

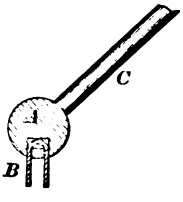

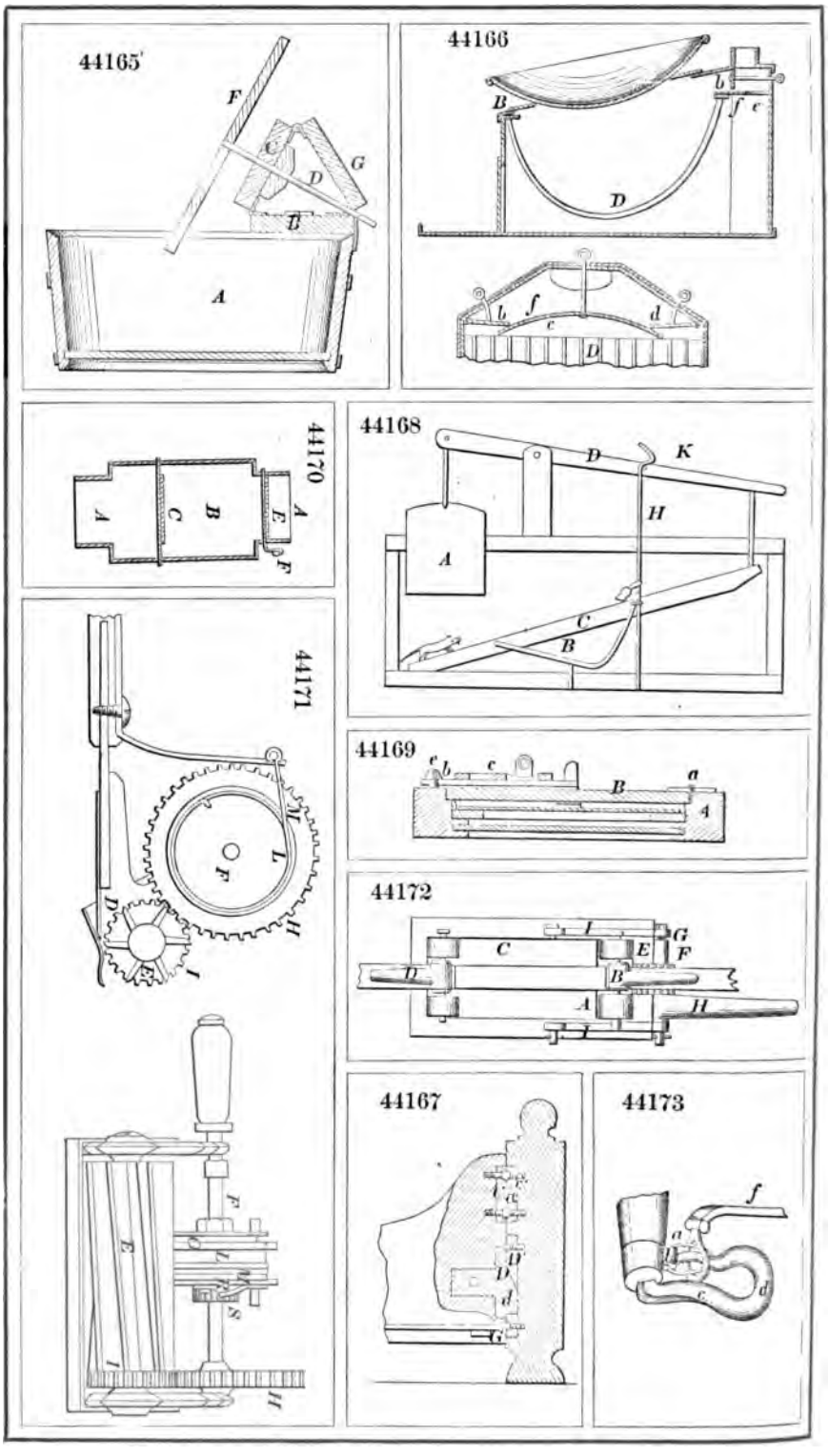
44165
44166
44170
44168
44171
44169
44172
44167
44173

44174

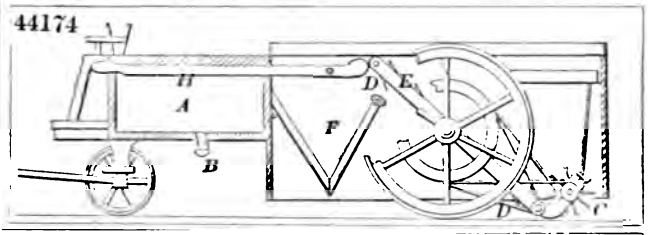

44177

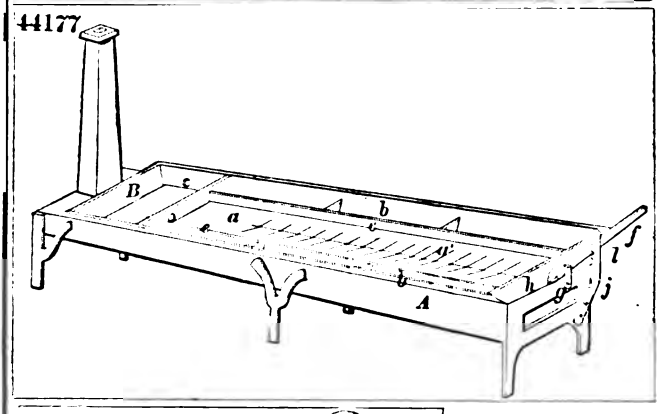

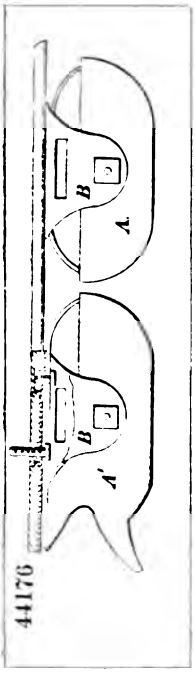

44176

44157

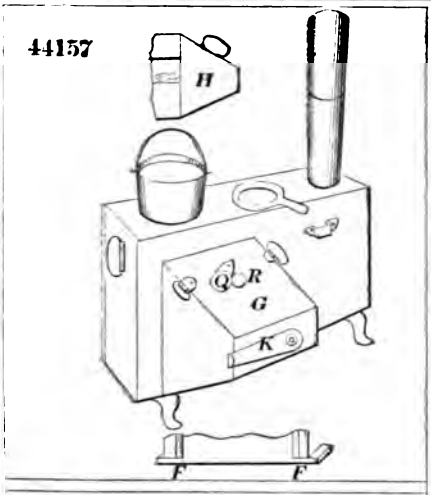

44180

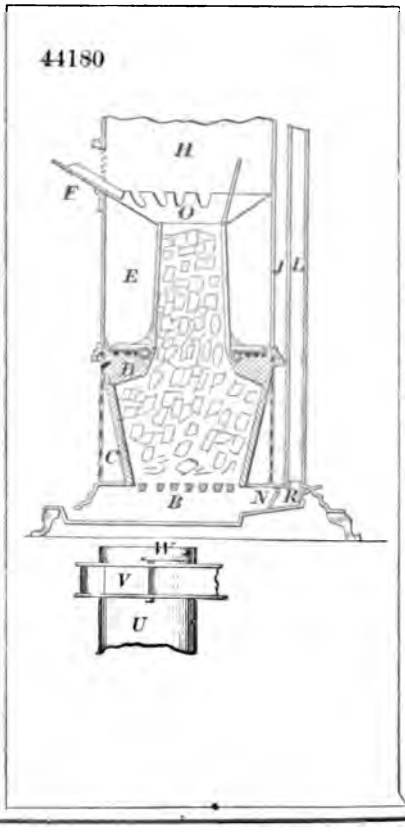

44179

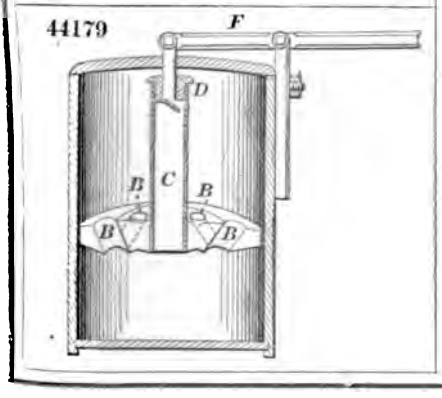

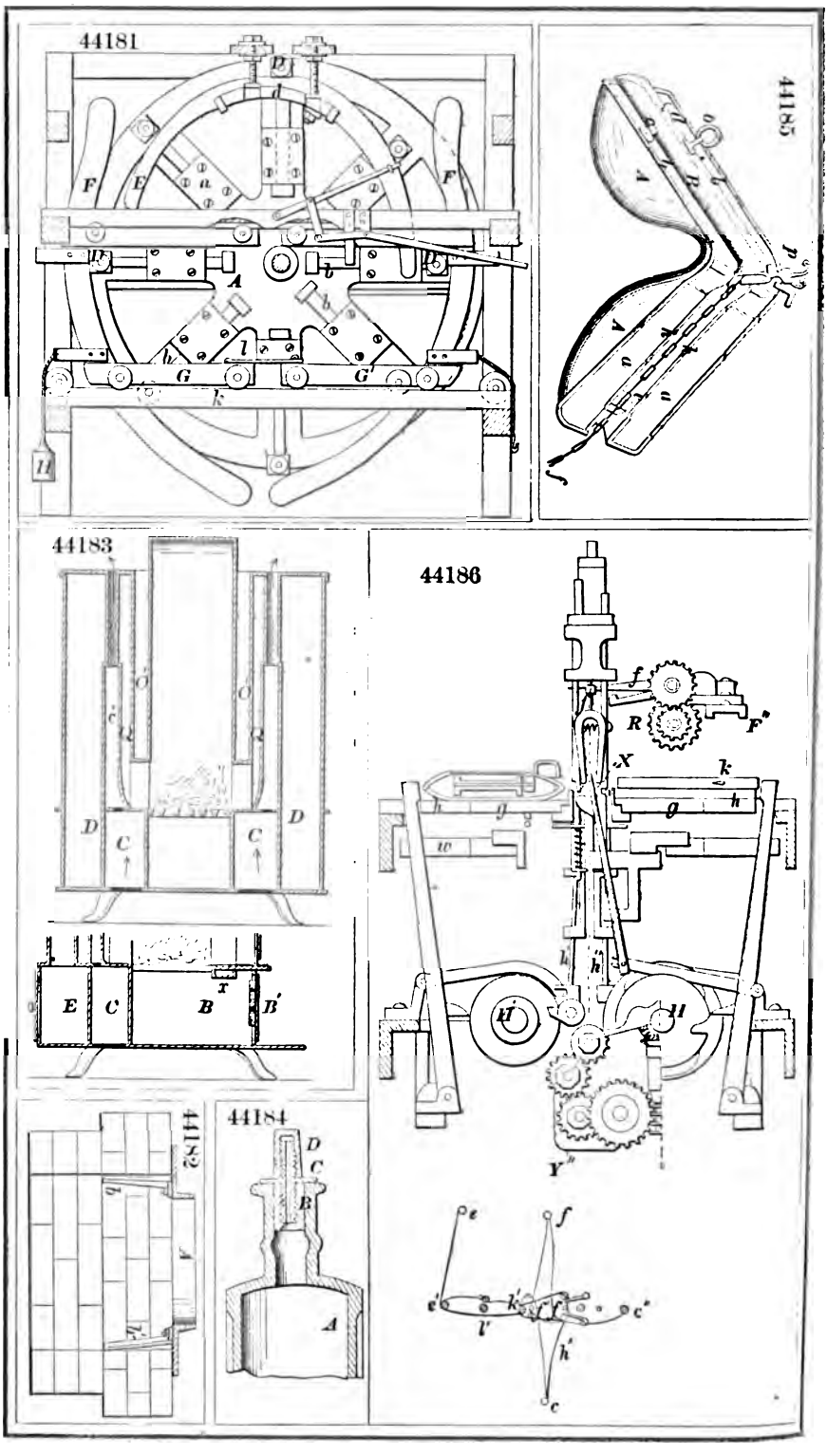
44181
44185
44183
44186
44184
44182

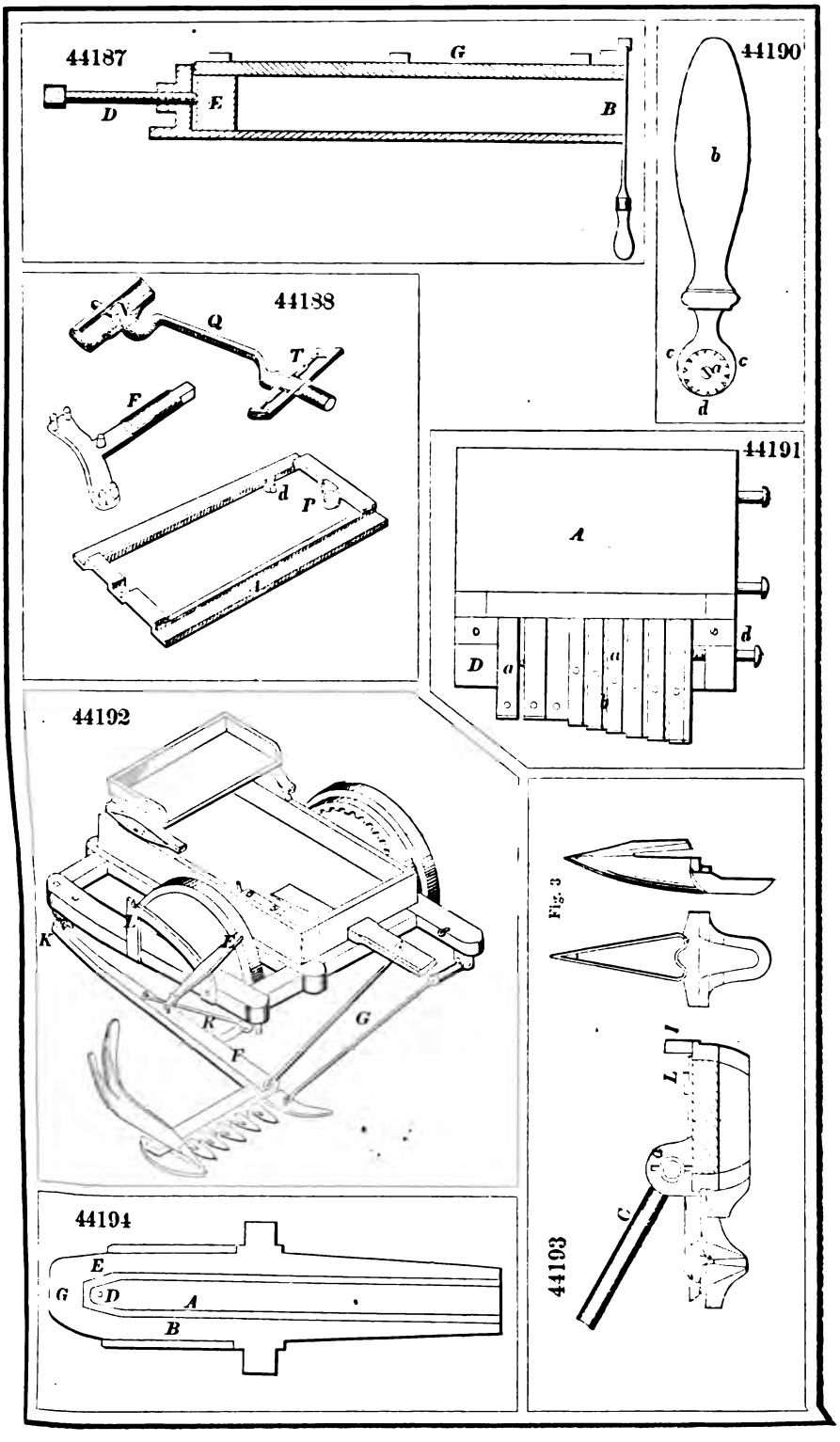
44187
G
E
D
B
44190
b
c
c
d
44188
c
Q
T
F
d
P
L
44191
A
D
a
a
b
d
44192
K
L
E
R
F
G
Fig. 3
44193
L
C
44194
E
G
D
A
B

44195

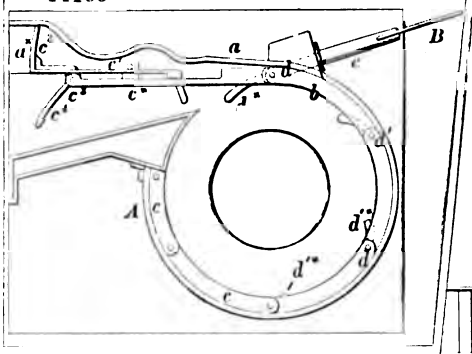

44196

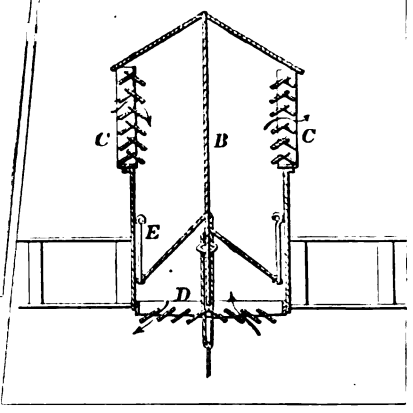

44199

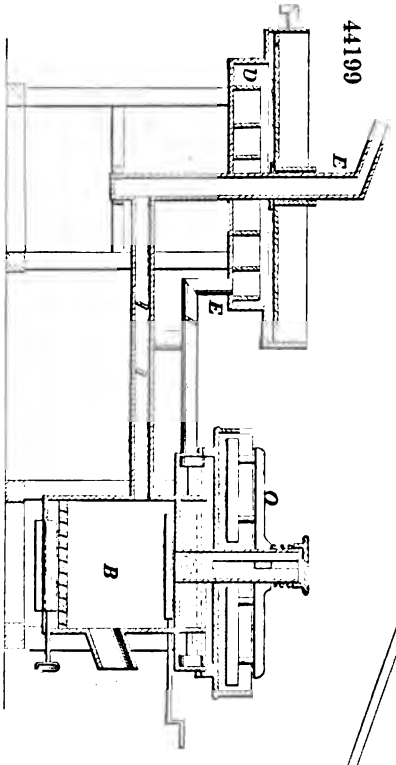

44198

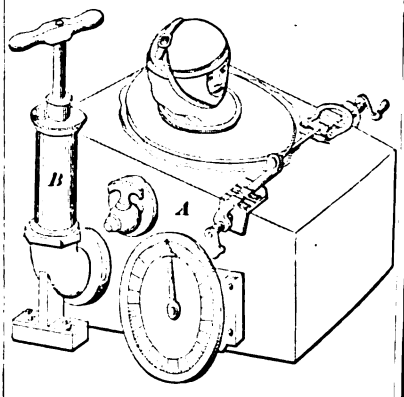

44200

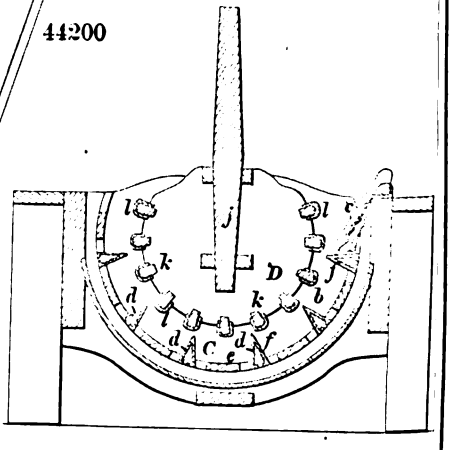

44197

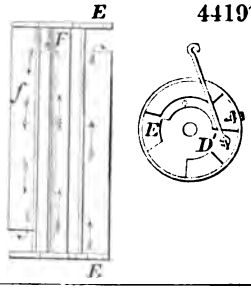

44201

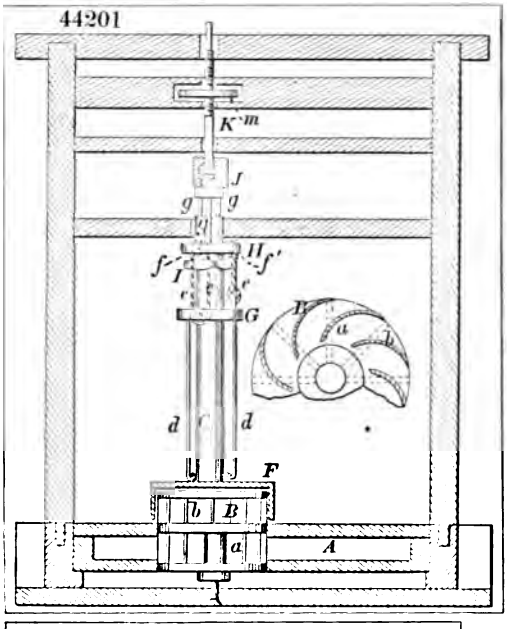

44204

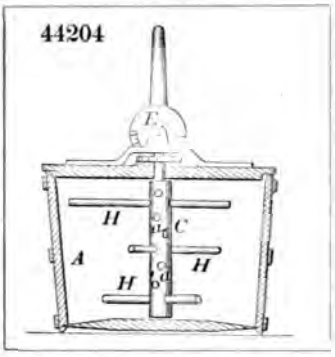

44203

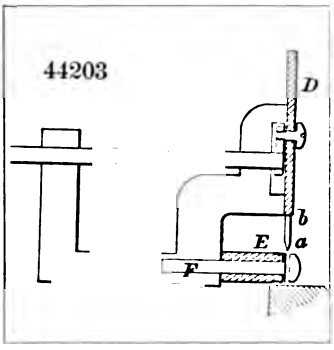

44202

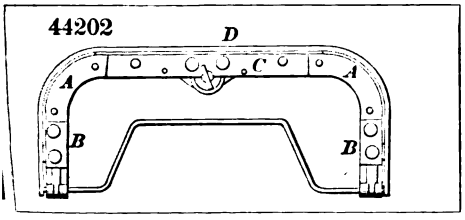

44207

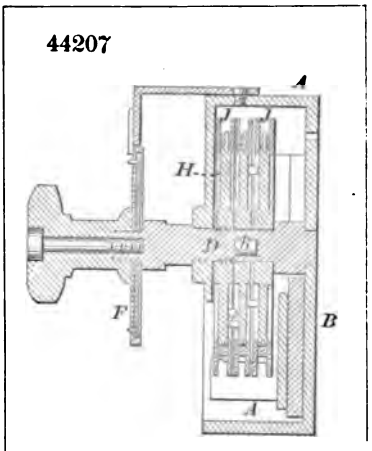

44205

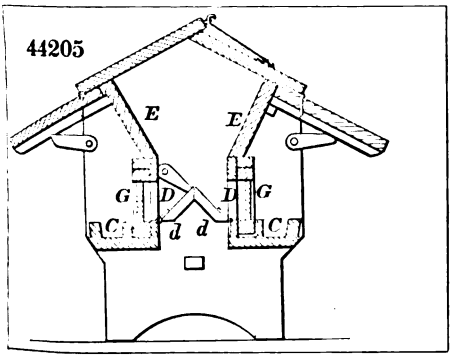

44206

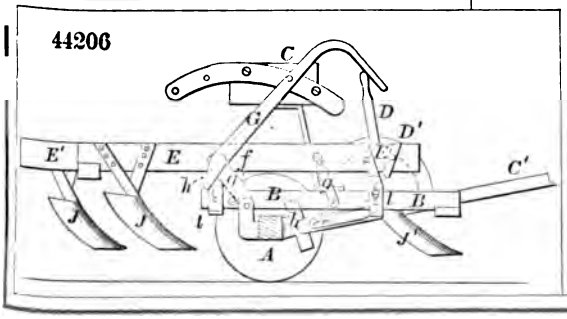

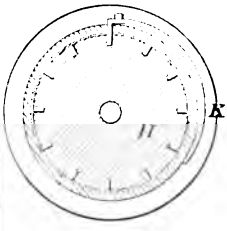

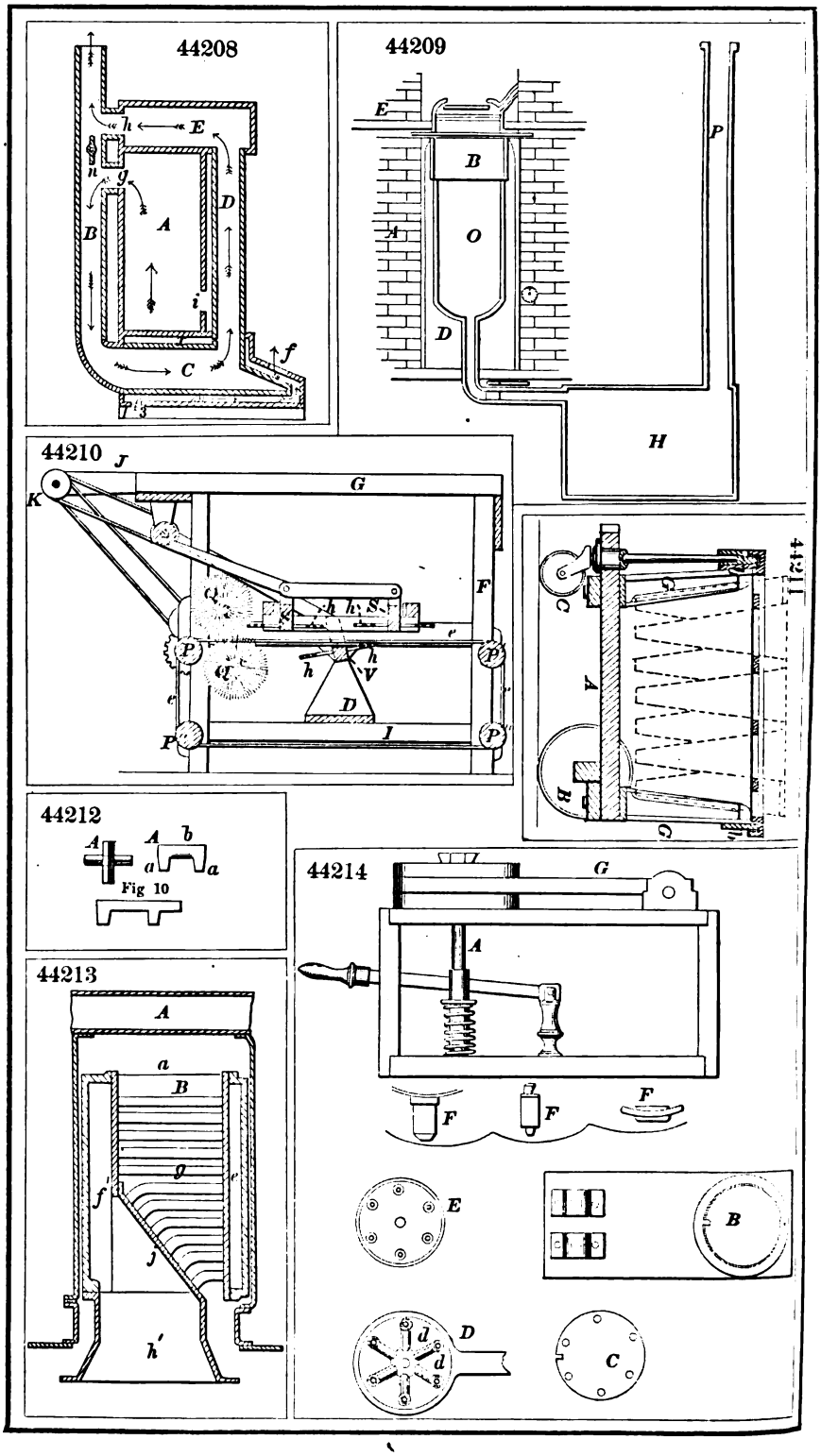
44208
44209
44210
44211
44212
44213
44214
Fig 10

44215

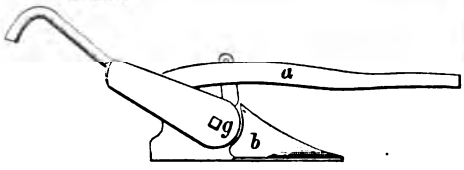

44216

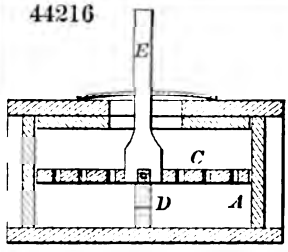

44217

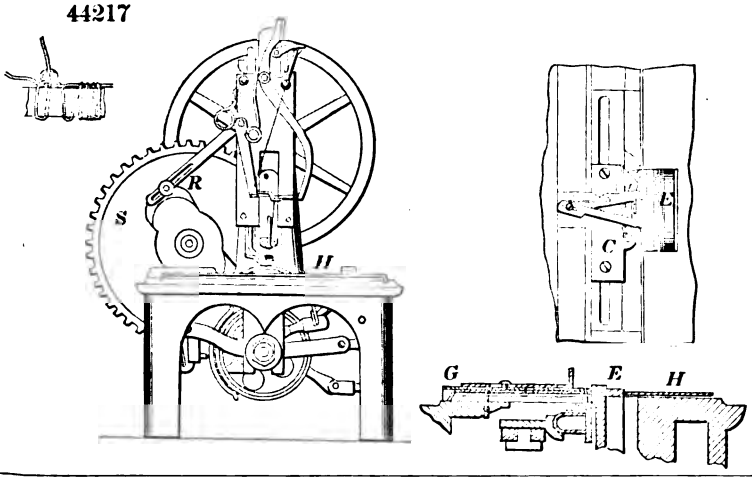

44219

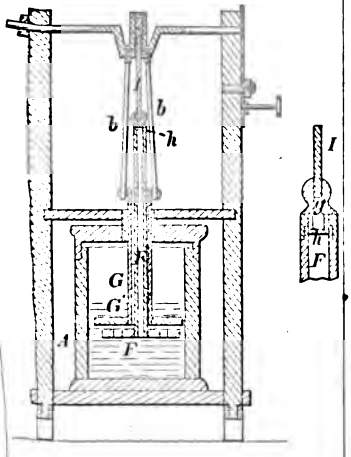

44218

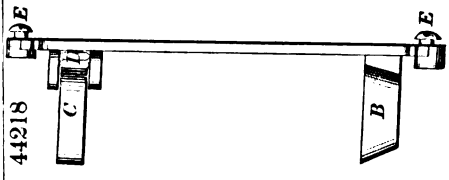

44221

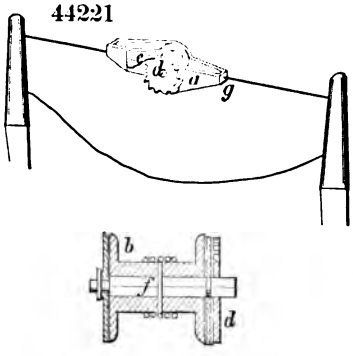

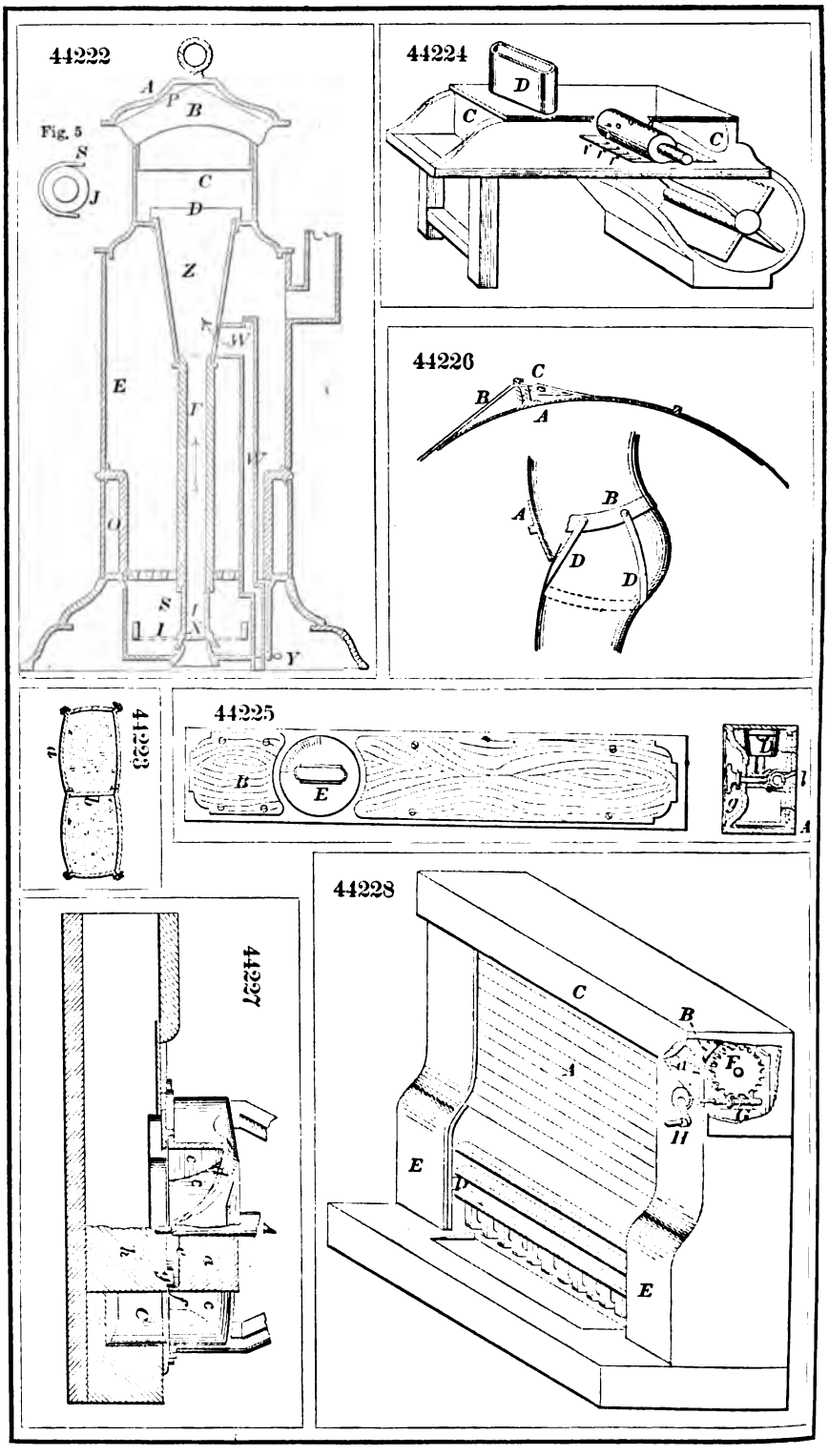
44222
Fig. 5
44224
44226
44225
44223
44227
44228

44229

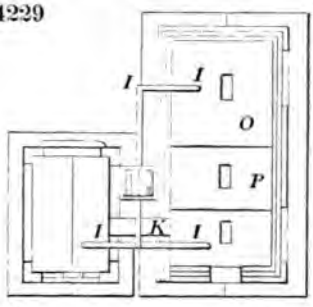

44230

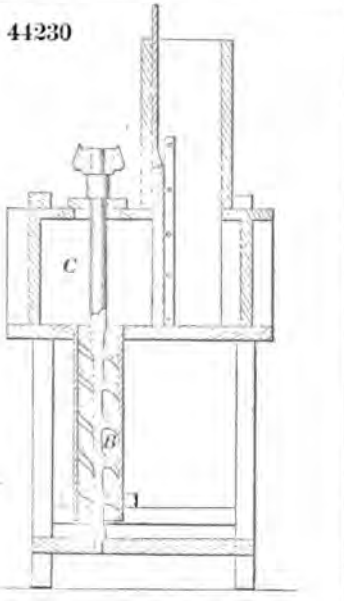

44231

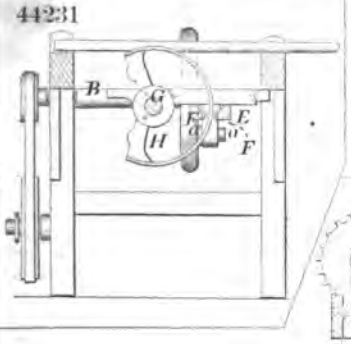

44232

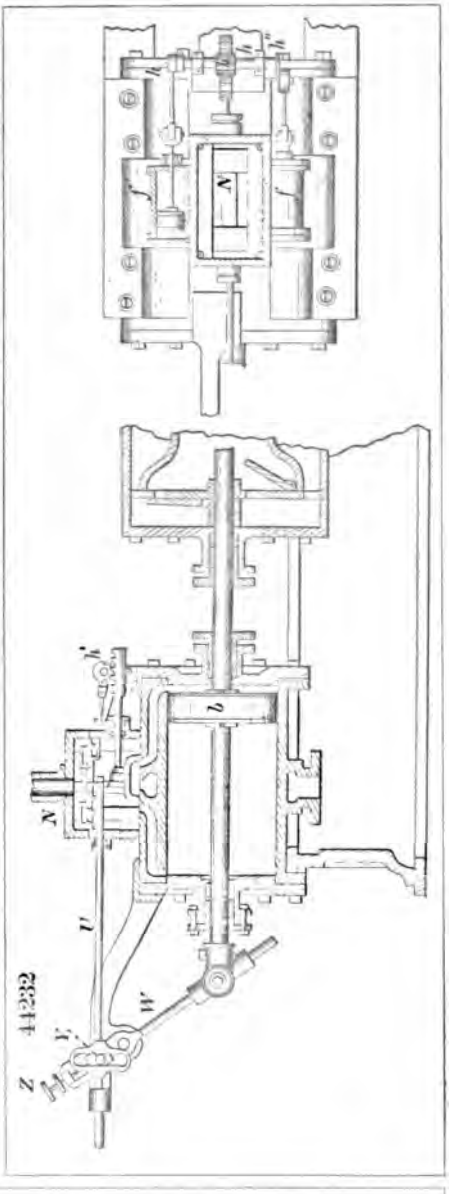

44233

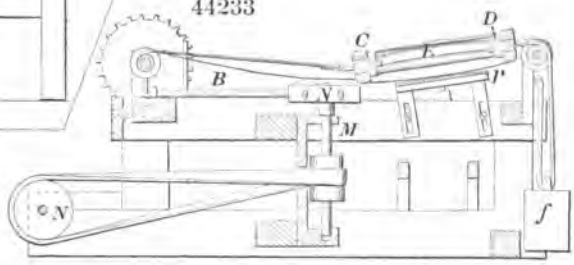

44235

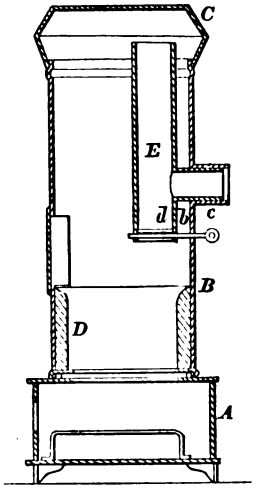

44236

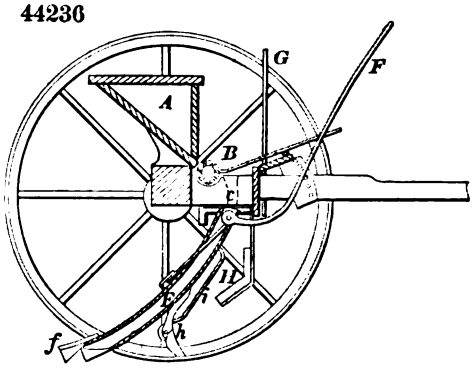

44237

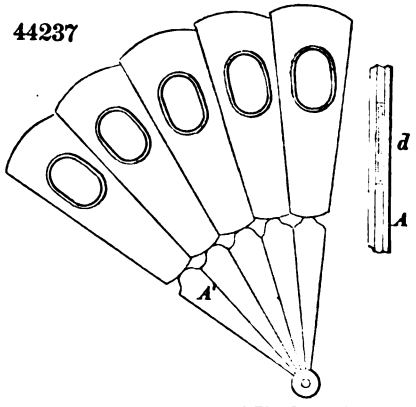

44238

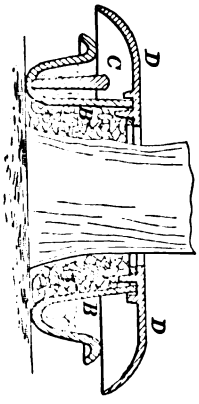

44239

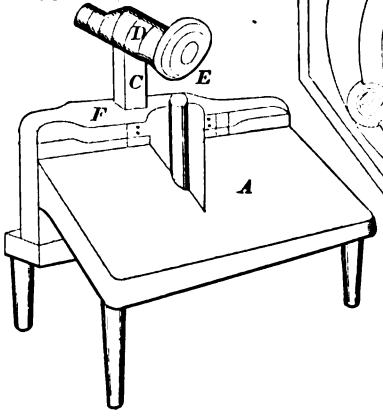

44240

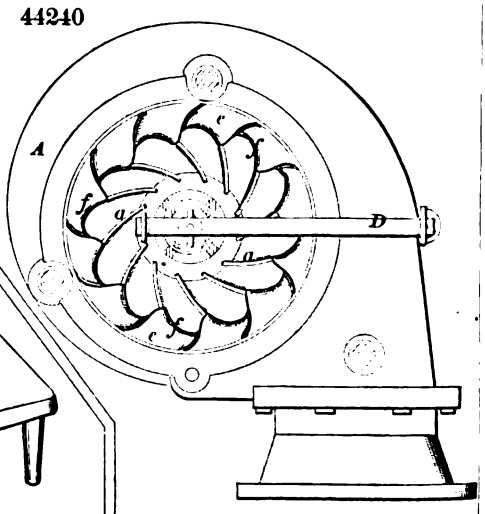

44241

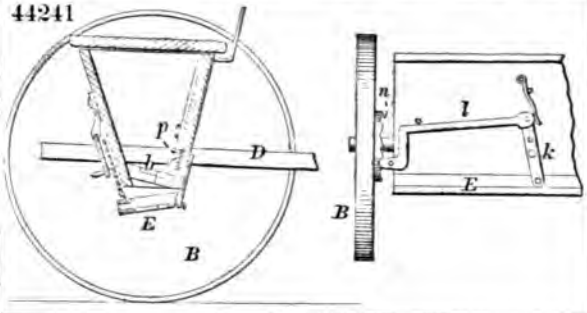

44244

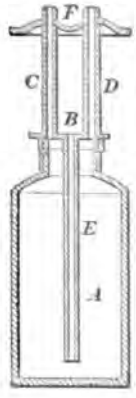

44243

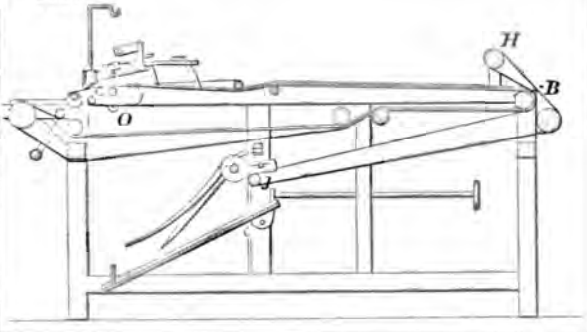

44245

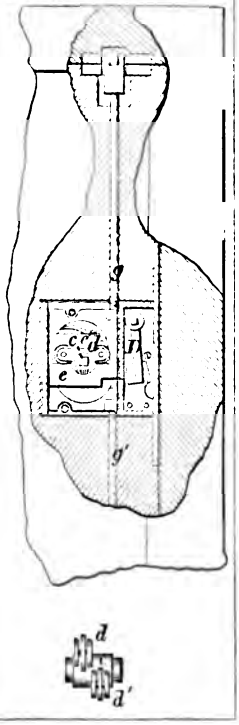

44246

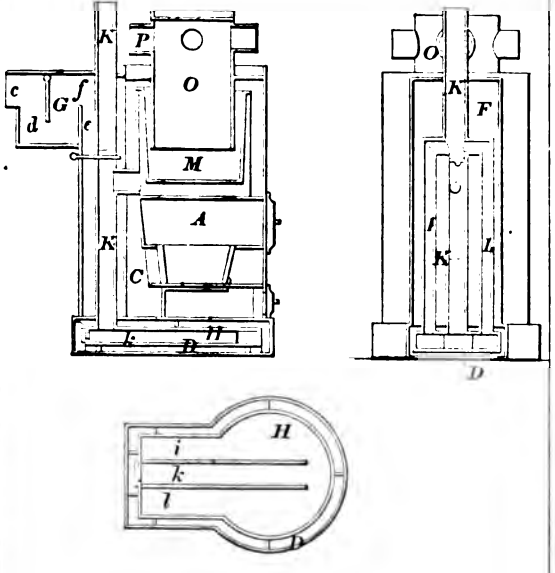

44247

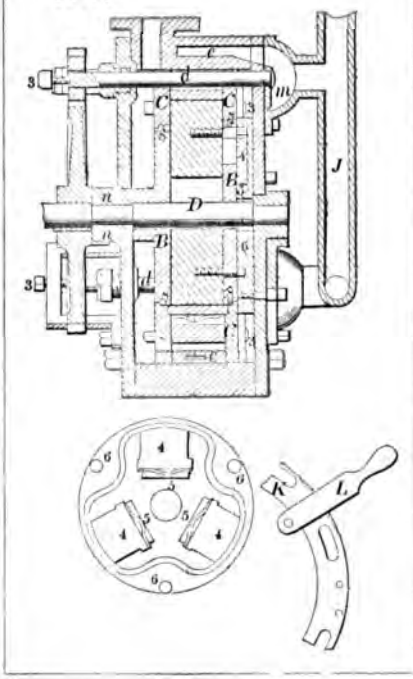

44249

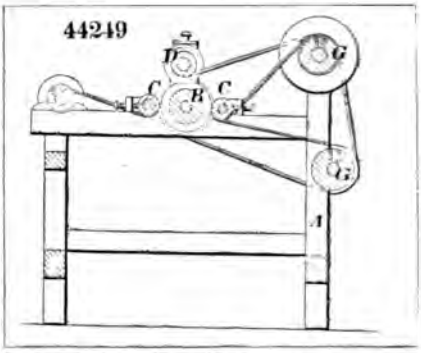

44252

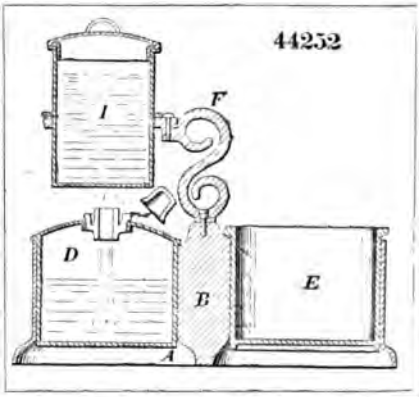

44251

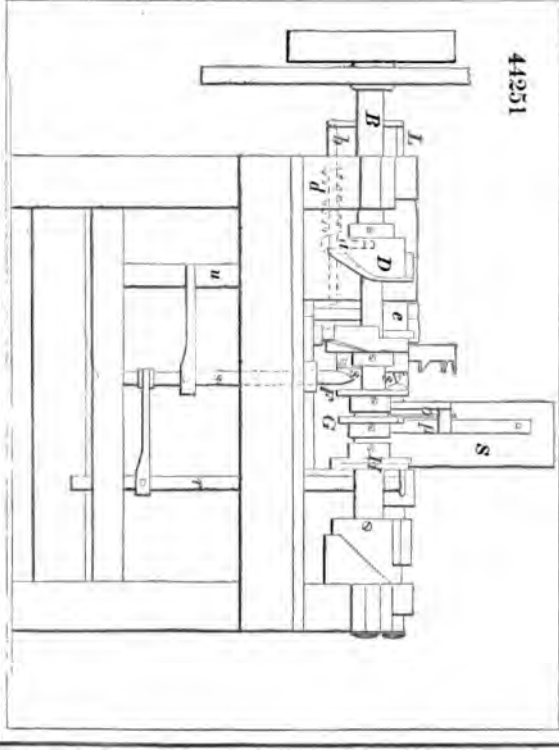

44248

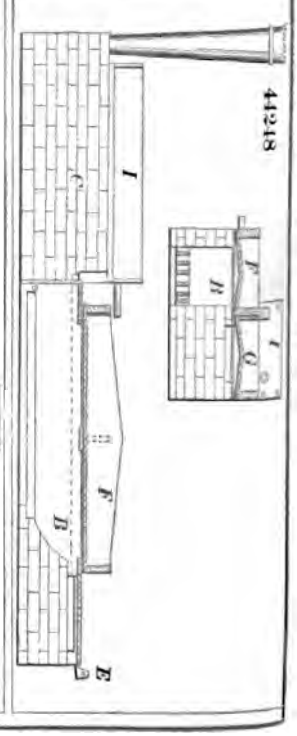

44253

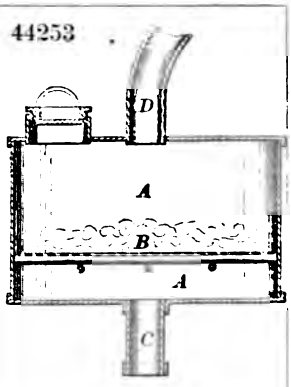

44255

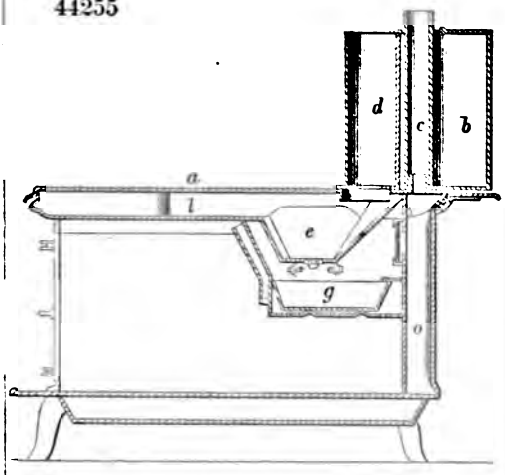

44257

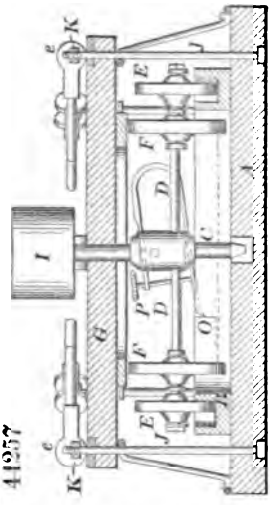

44256

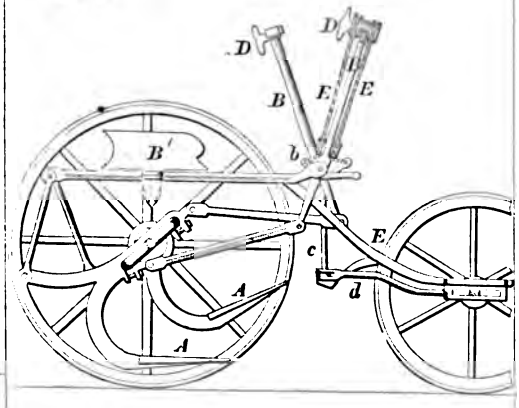

44254

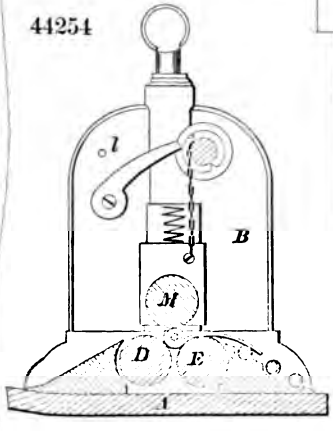

44259

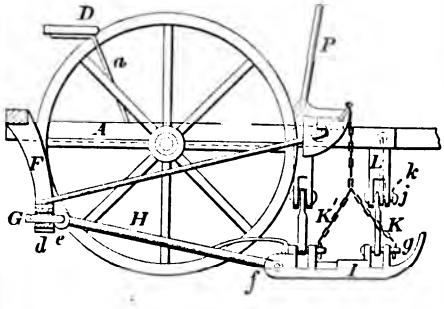

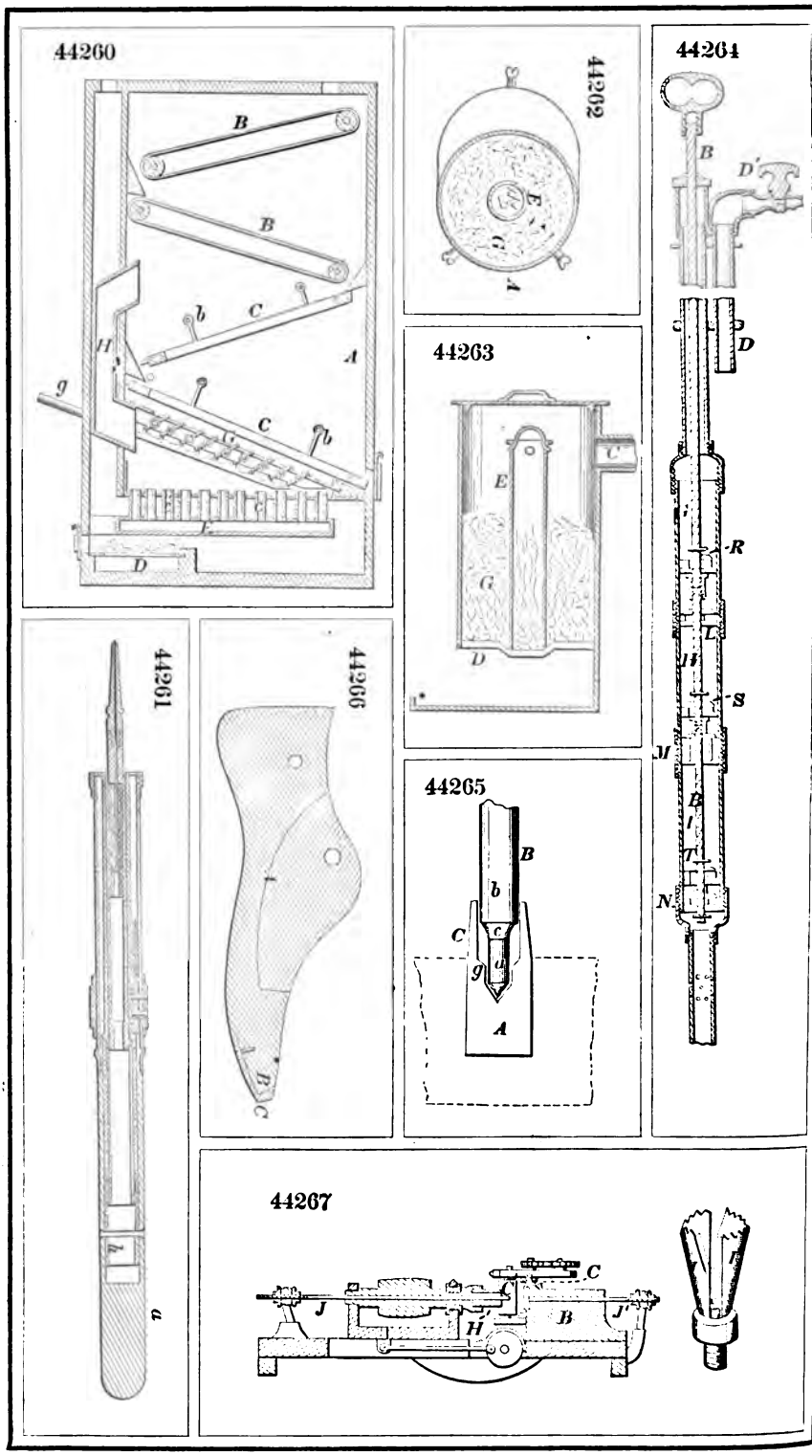
44260
44262
44264
44263
44261
44266
44265
44267

44268

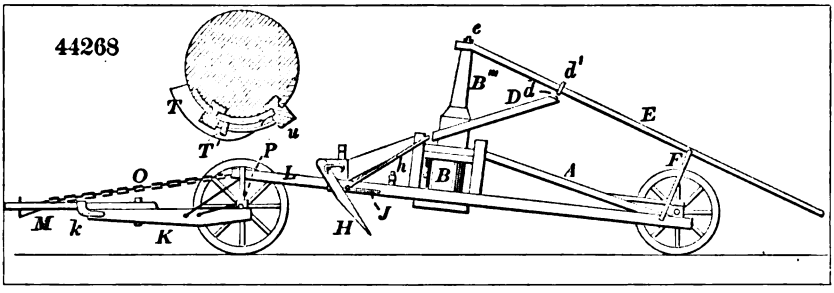

44270

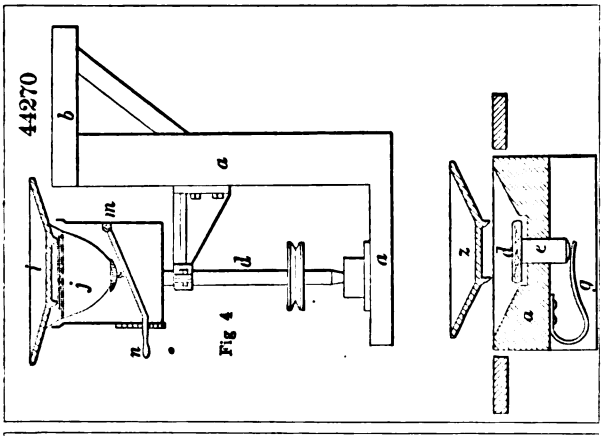

44272

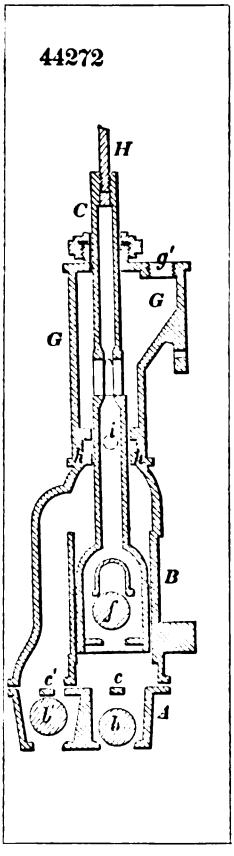

44271

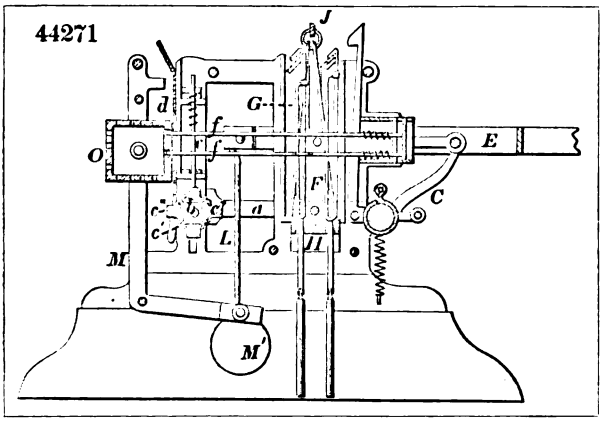

44273

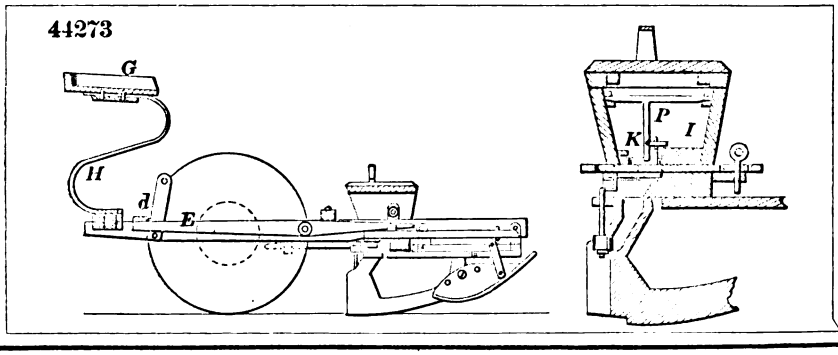

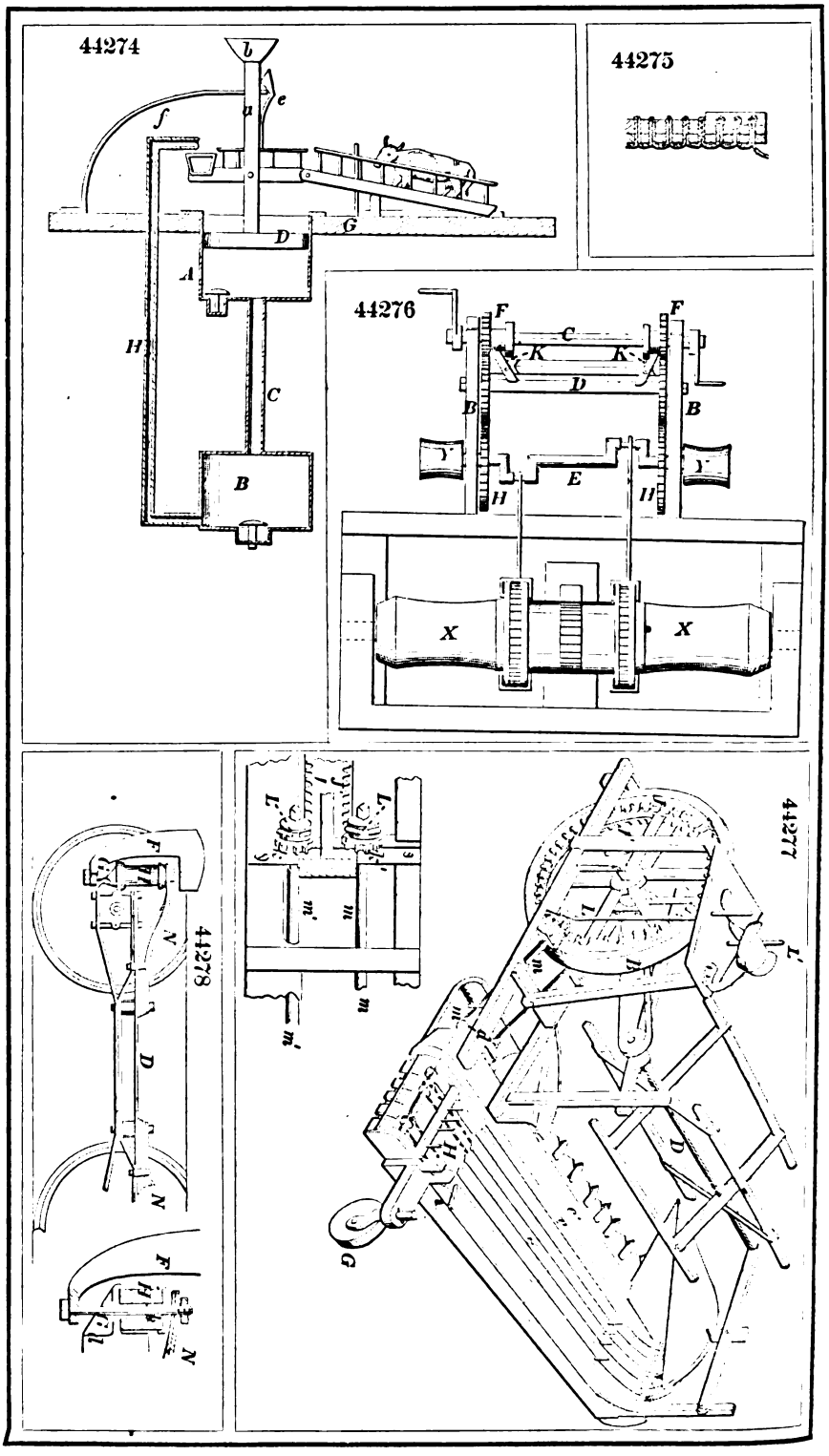
44274
44275
44276
44277
44278

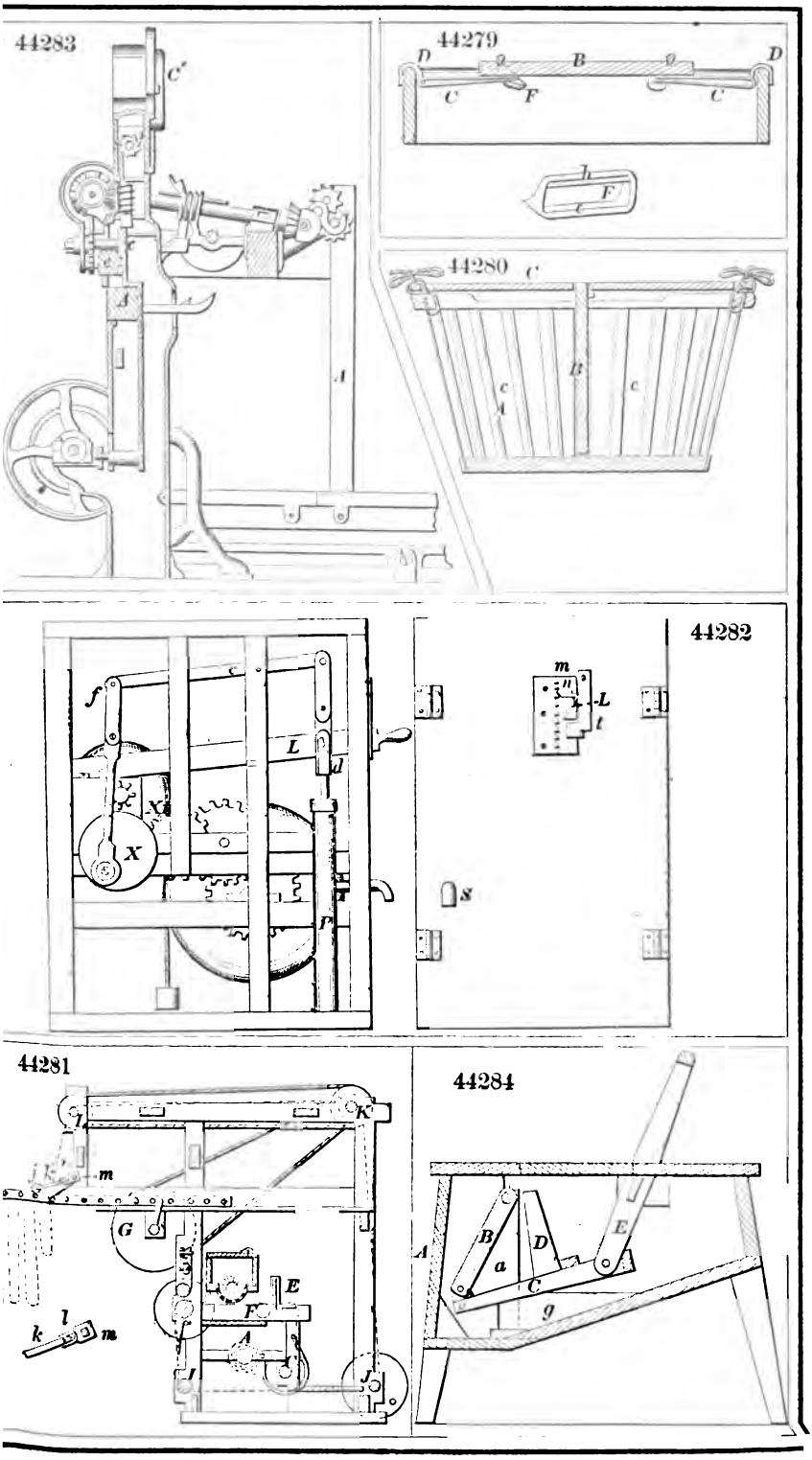
44283
C'
A
44279
D
B
D
C
F
C
F
44280
C
B
c
c
A
44282
m
L
t
s
f
L
d
X
X
P
44281
l
K
m
G
E
F
A
k
l
m
j
j
44284
B
D
E
A
a
C
g

44286

44290

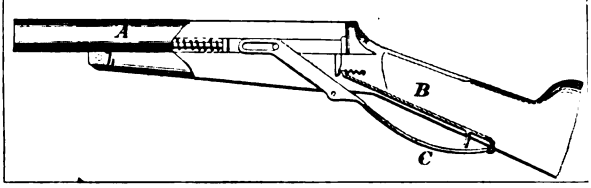

44287

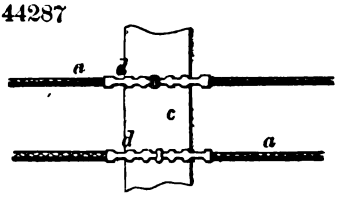

44291

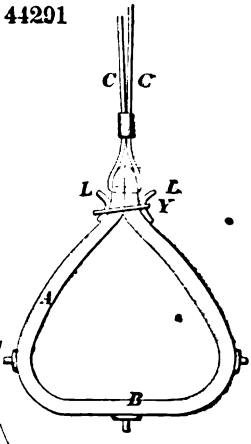

44289

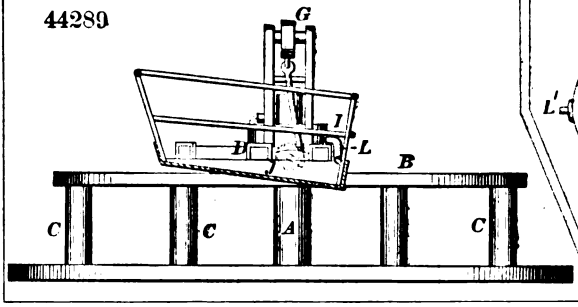

44288

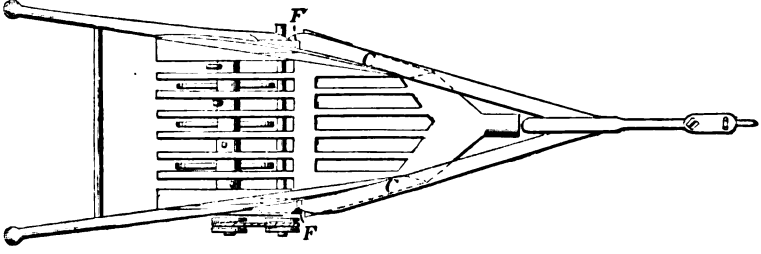

44292

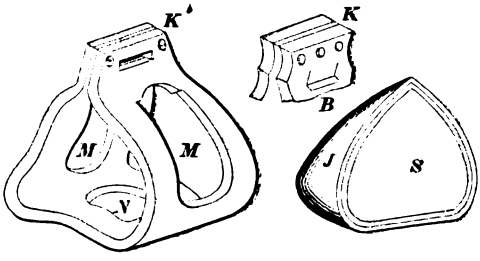

44293

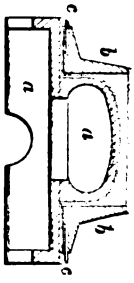

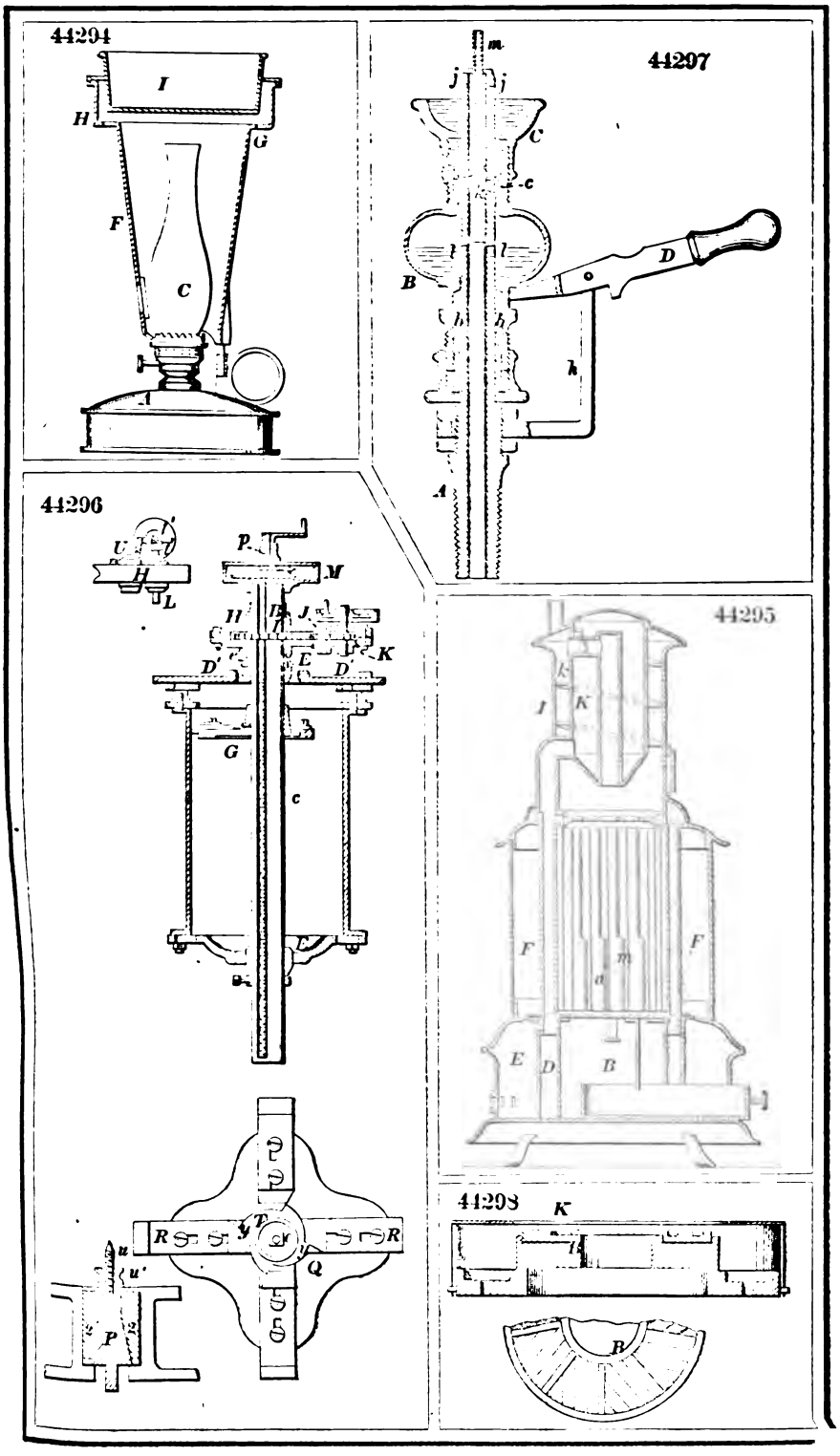
44294
I
H
G
F
C
44297
m
j
j
C
c
B
l
l
D
h
h
A
44296
U
H
L
P
M
H
B
J
K
D'
E
D'
G
c
R
y
T
R
Q
u
u'
P
44295
k
K
J
F
F
m
a
E
D
B
44298
K
R

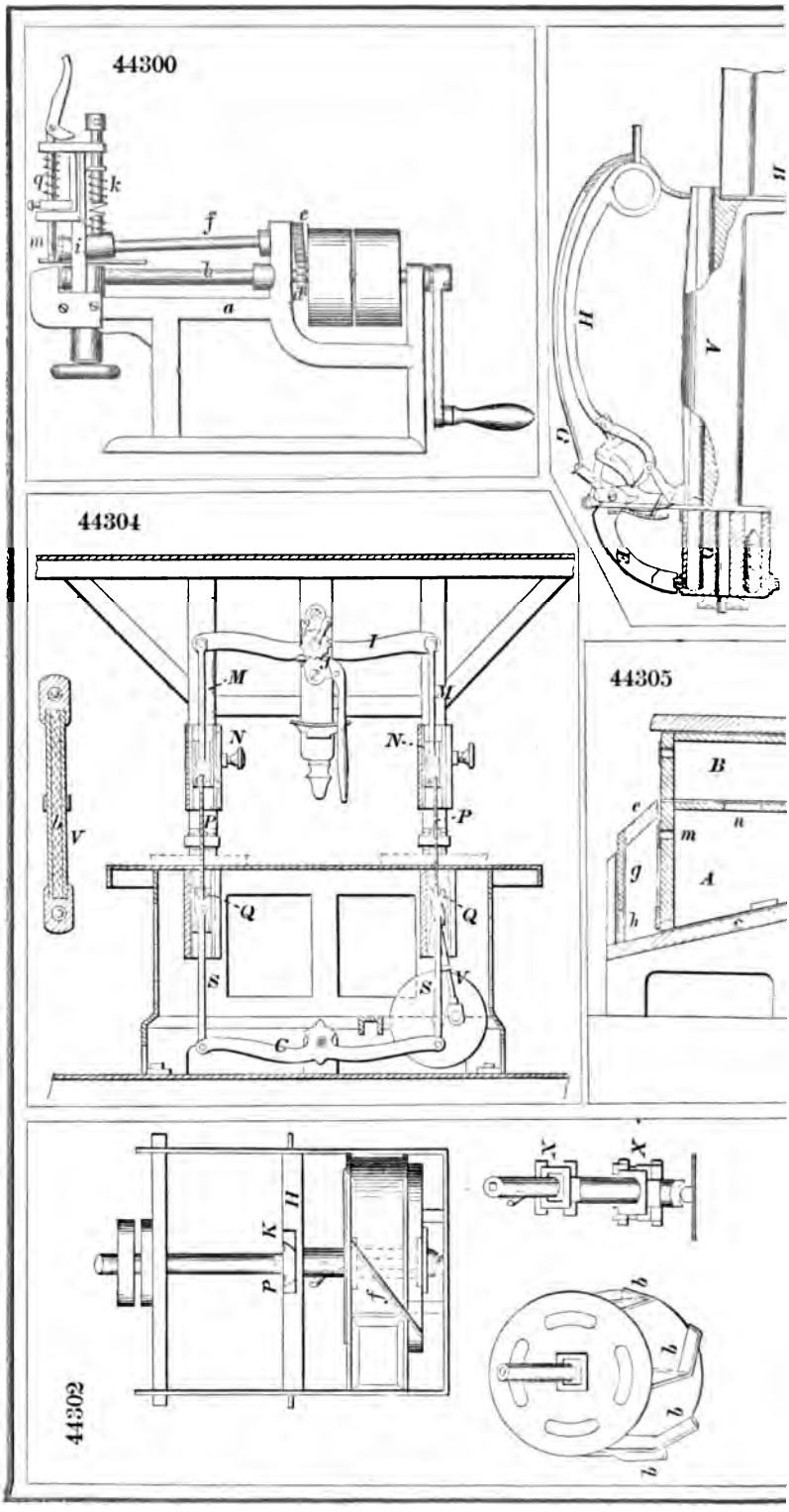
44300
44304
44305
44302

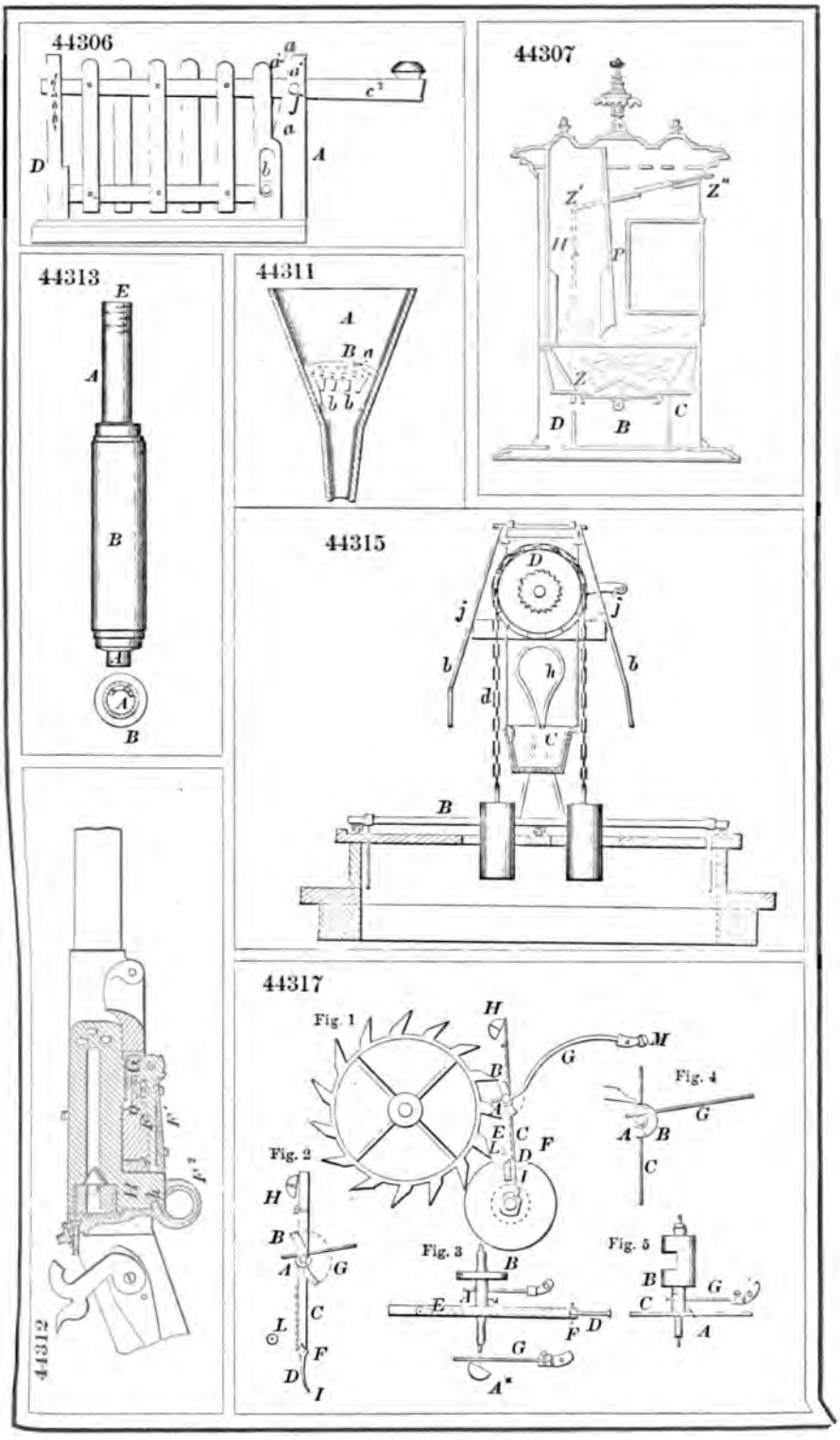
44306
44307
44313
44311
44315
44312
44317
Fig. 1
Fig. 2
Fig. 3
Fig. 4
Fig. 5

44318

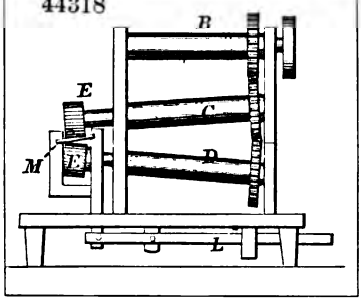

44320

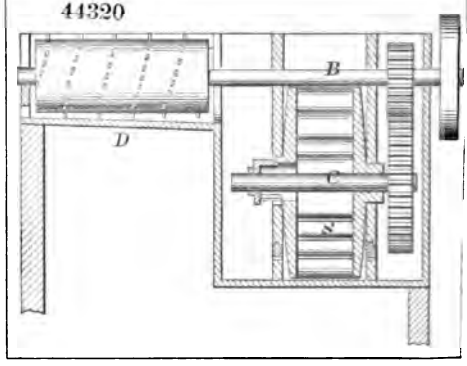

44319

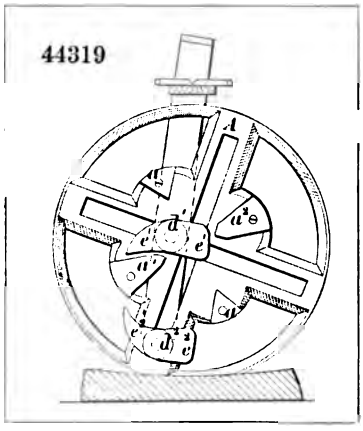

44324

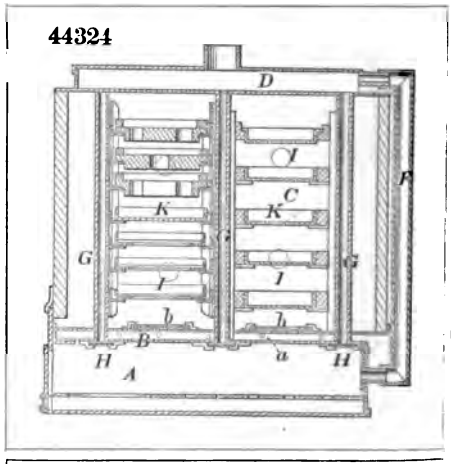

44322

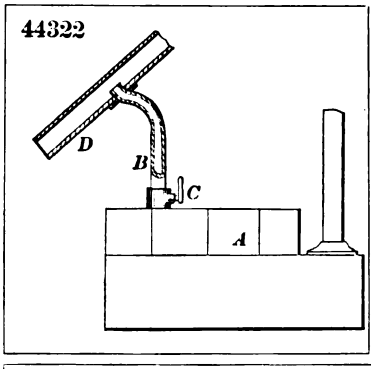

44321

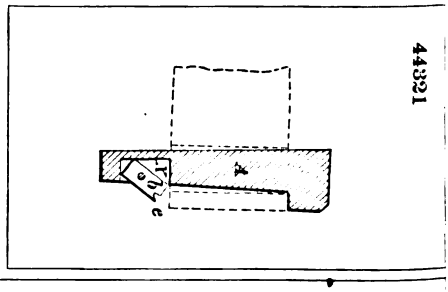

44325

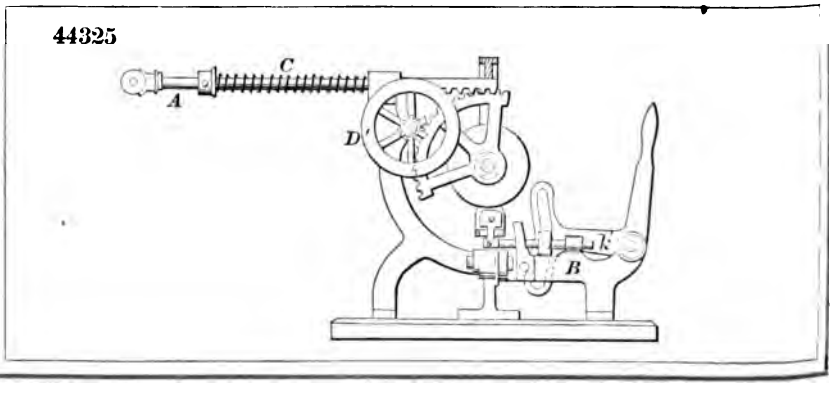

44326

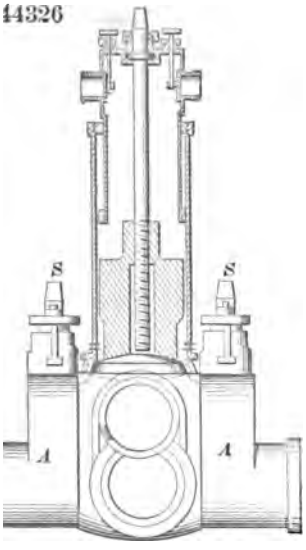

44327

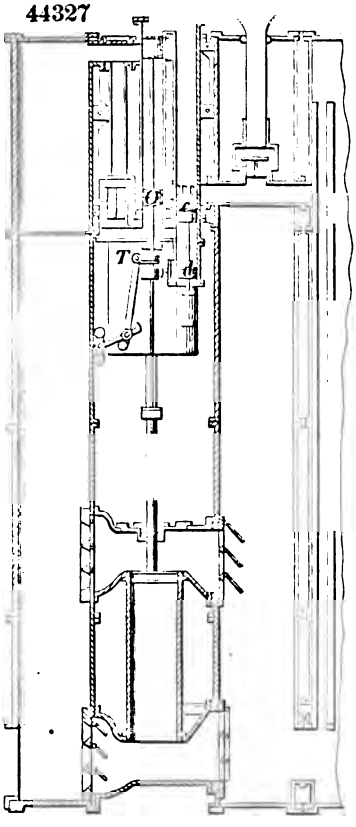

44328

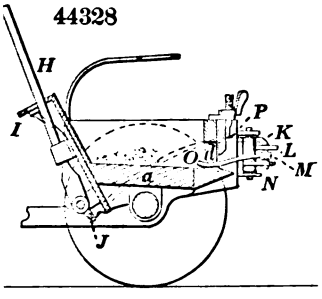

44329

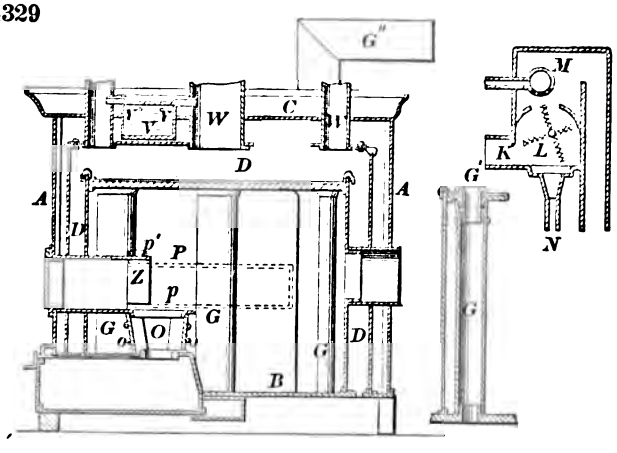

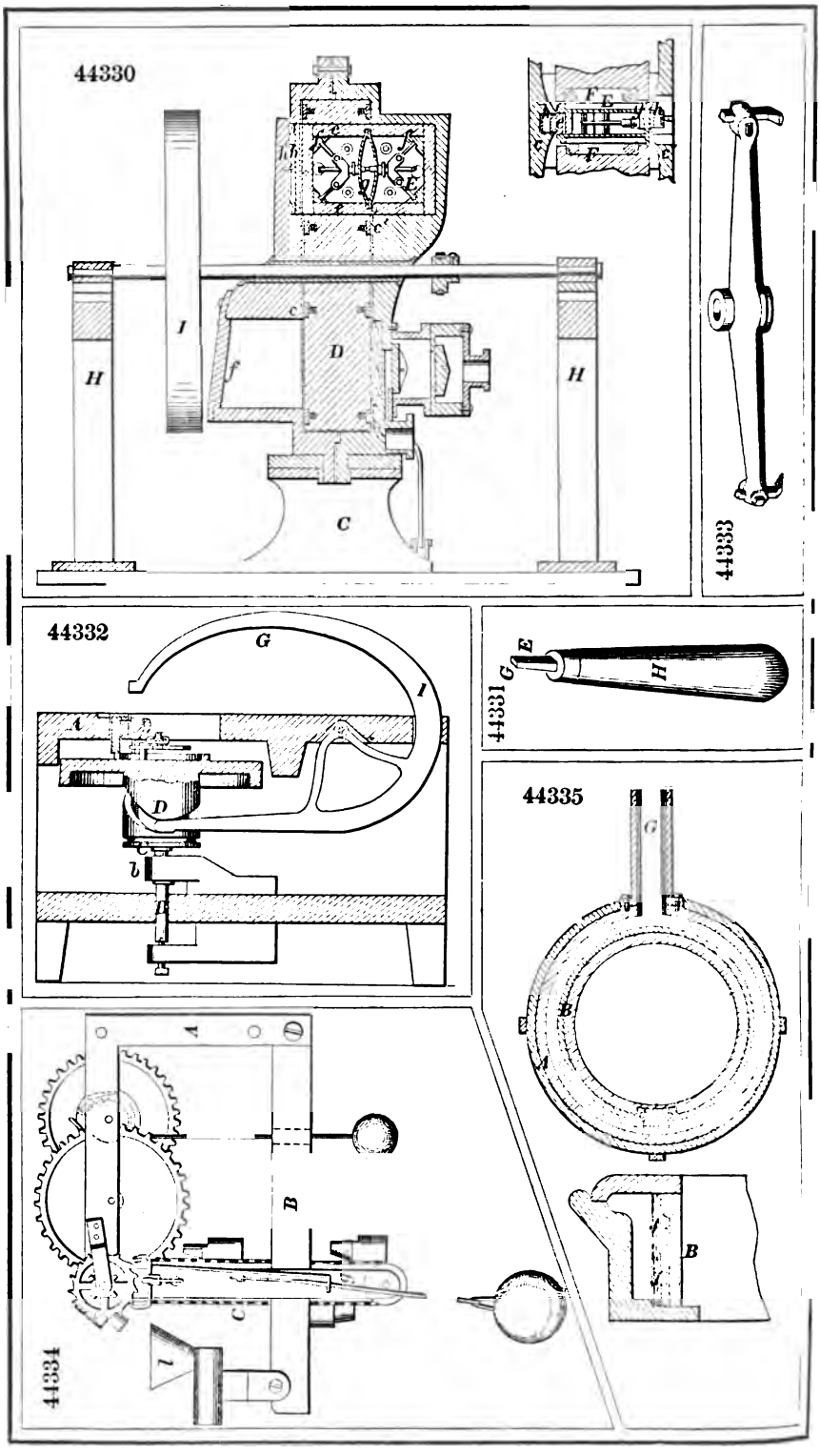
44330
44331
44332
44333
44334
44335

44336

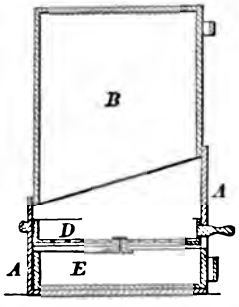

44340

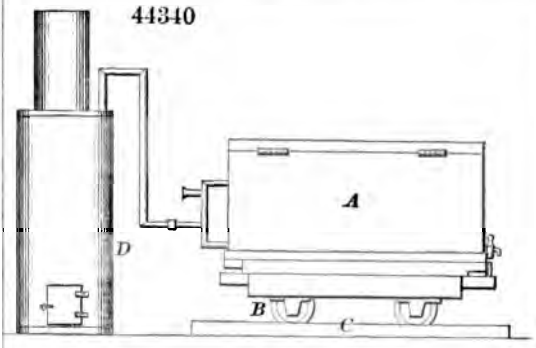

44337

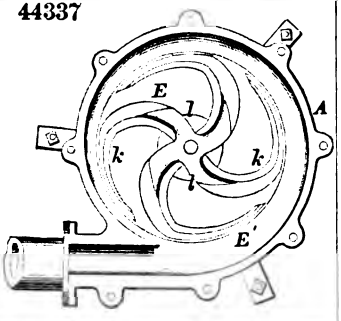

44338

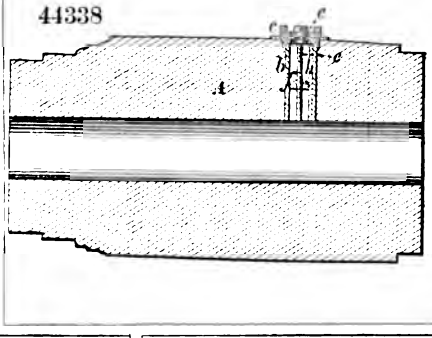

44341

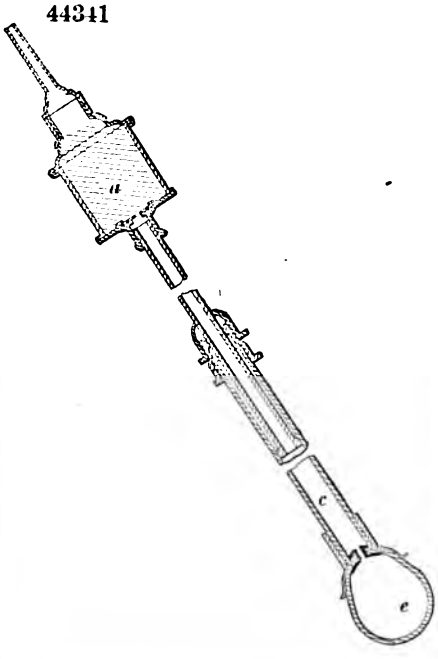

44339

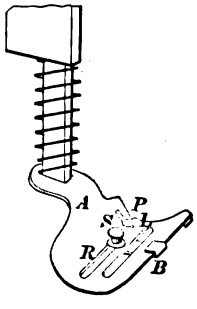

44342

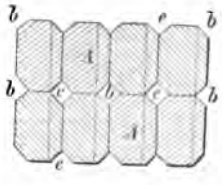

44343

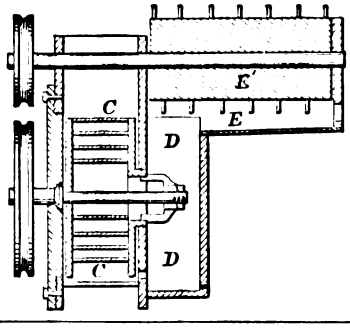

44345

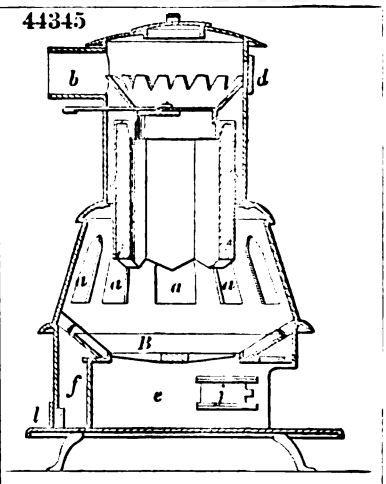

44348

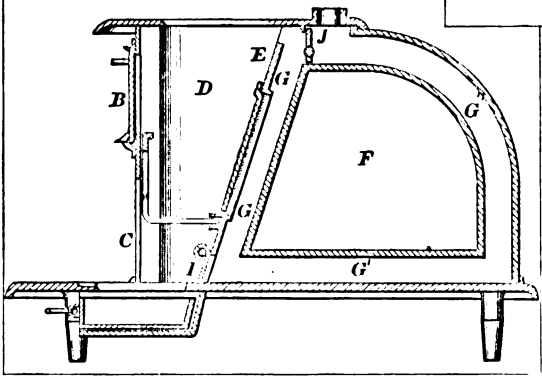

44347

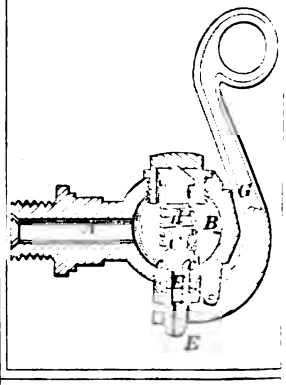

44346

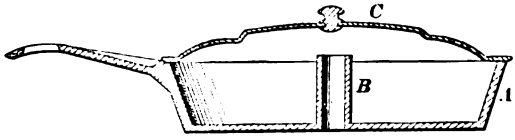

44349

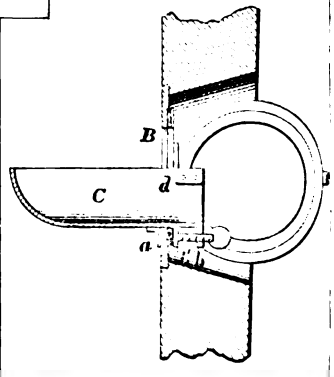

44344

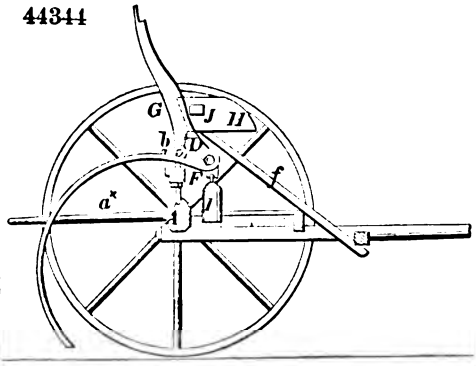

44350

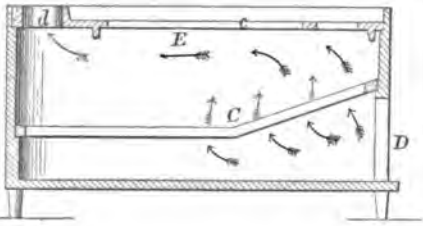

44354

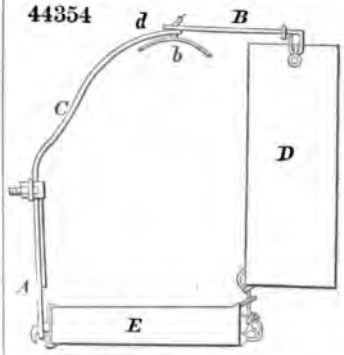

44351

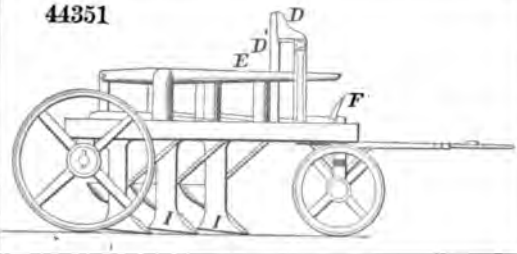

44355

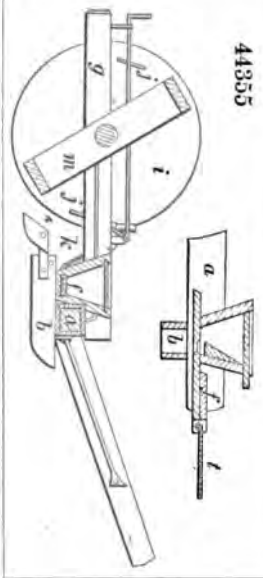

44353

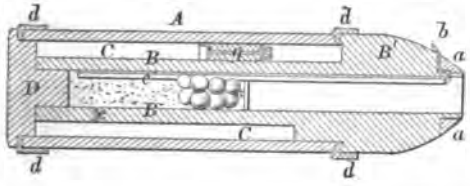

44352

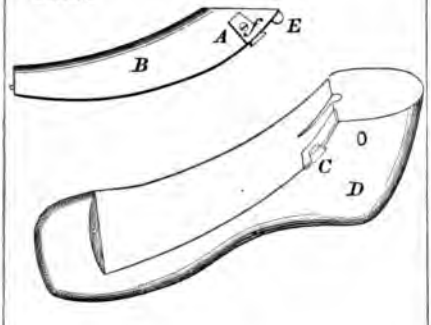

44356

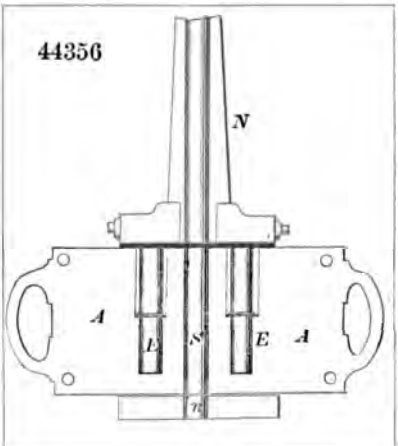

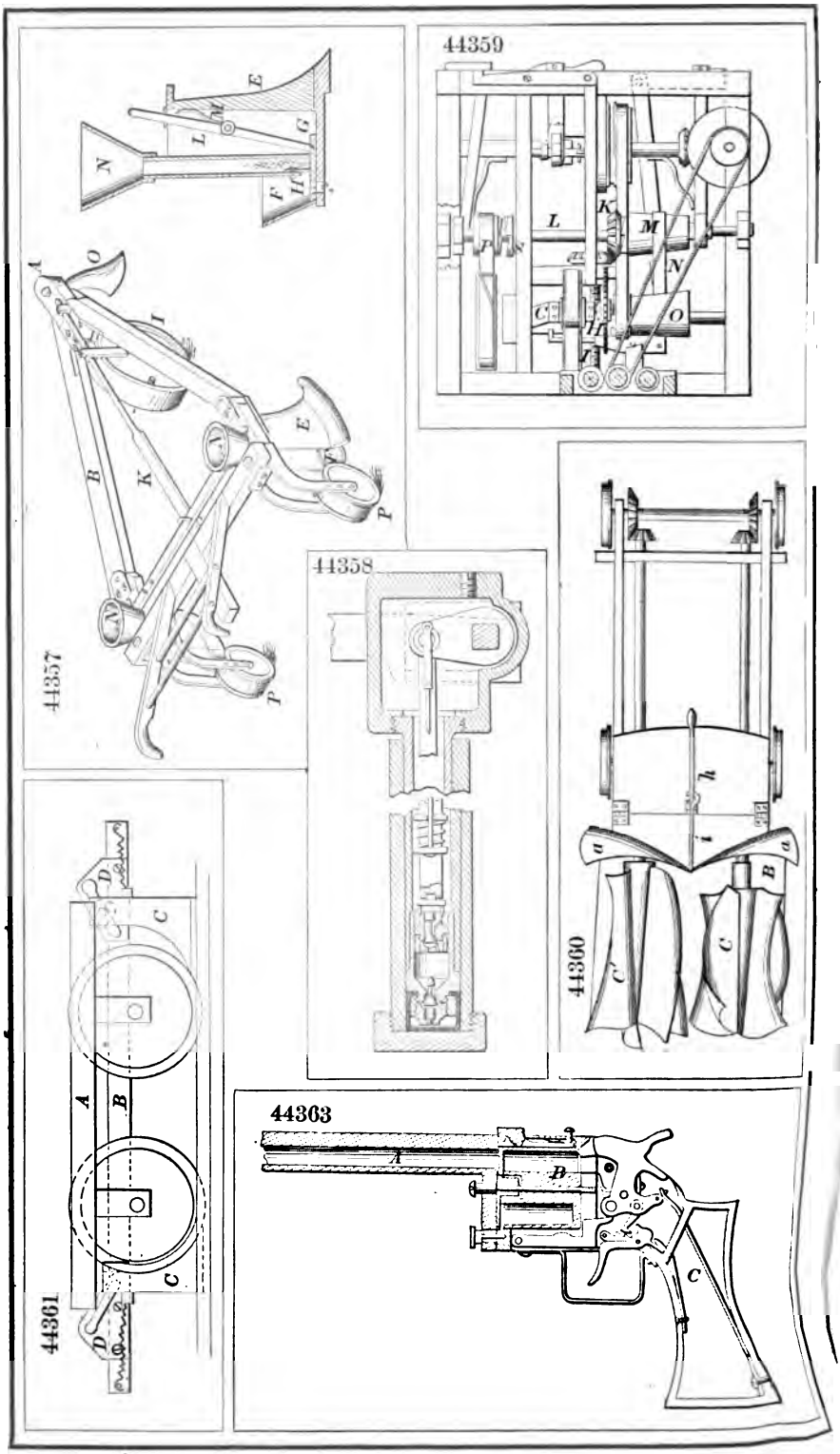
44357
44358
44359
44360
44361
44363

44364

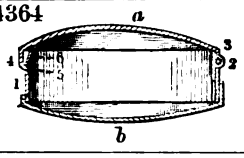

44365

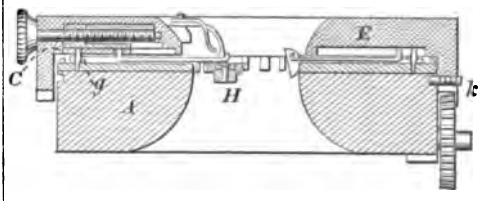

44366

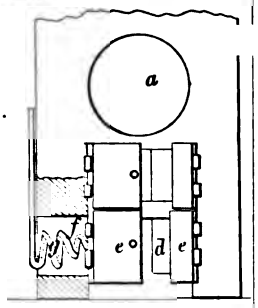

44367

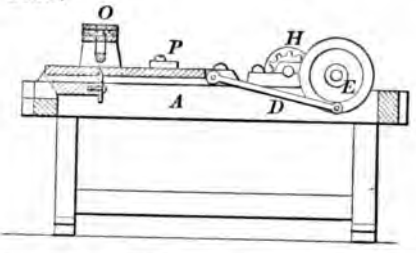

44368

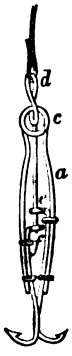

44371

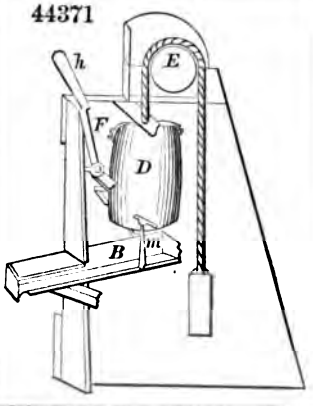

44372

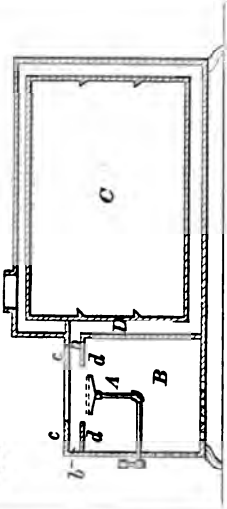

44369

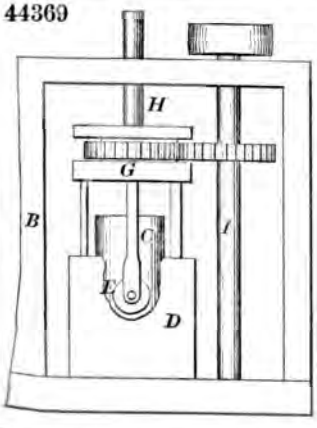

44373

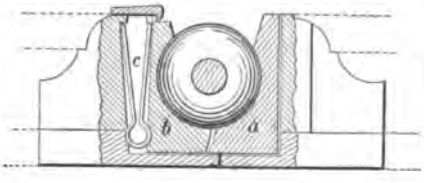

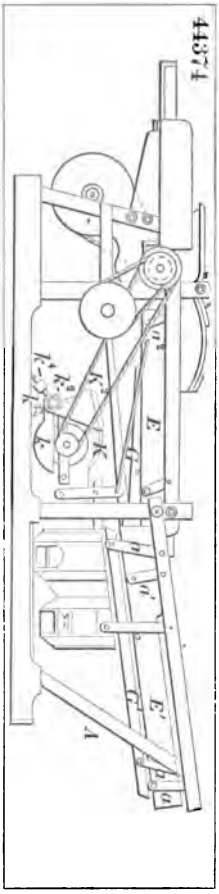
44374

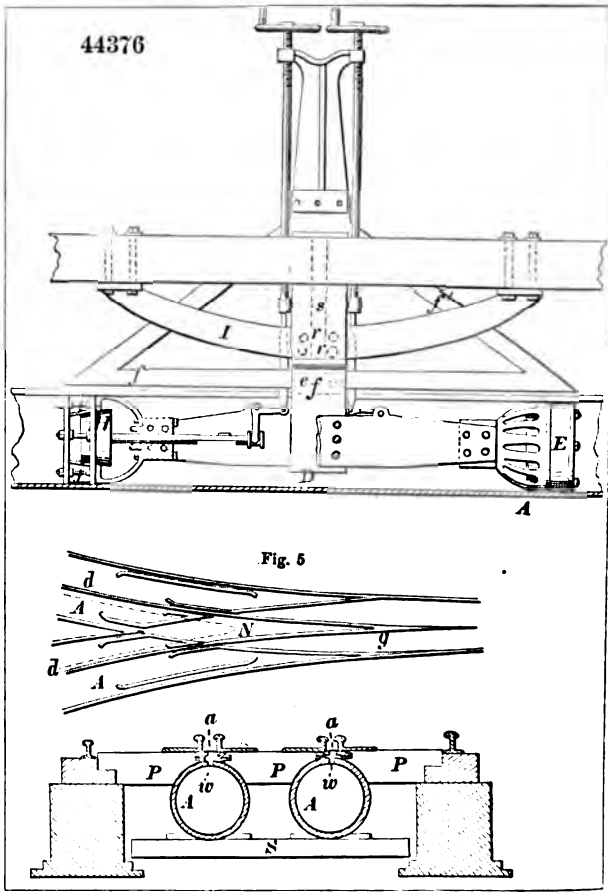
44376
Fig. 5

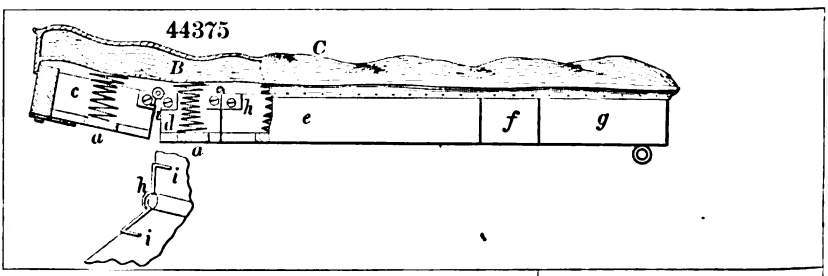
44375

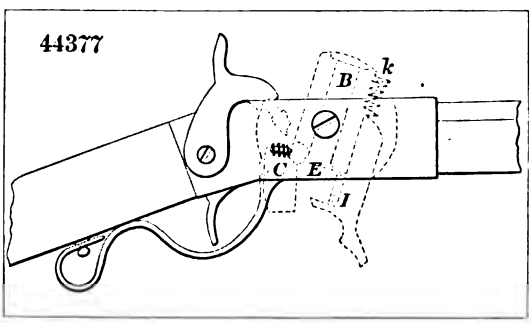
44377

44378

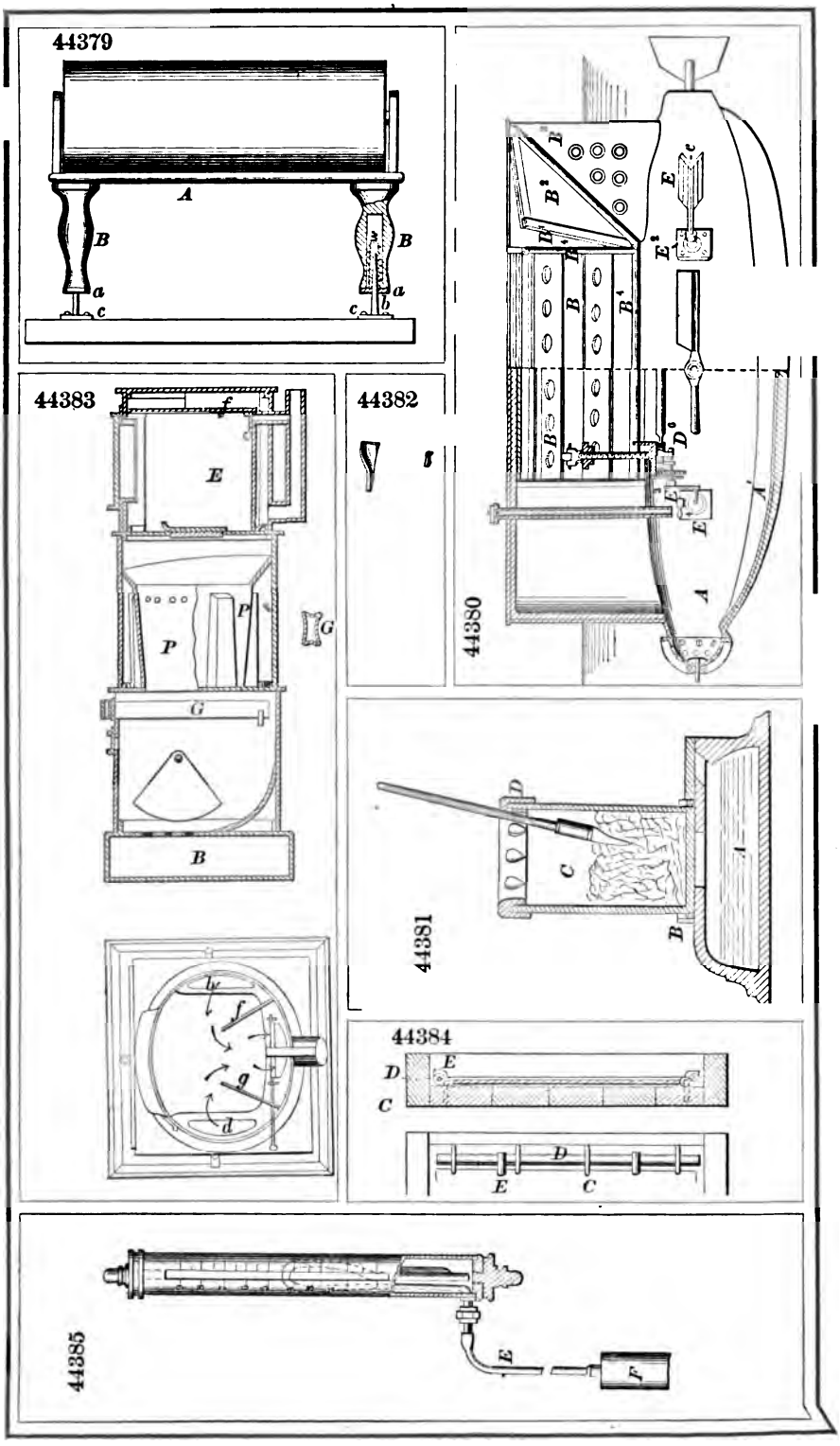
44379
44380
44381
44382
44383
44384
44385

44386

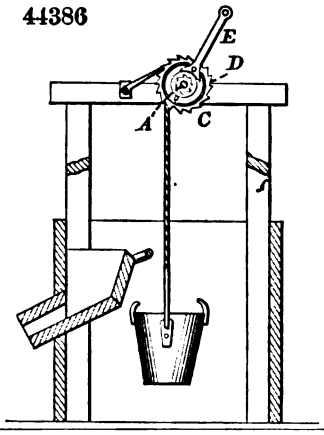

44387

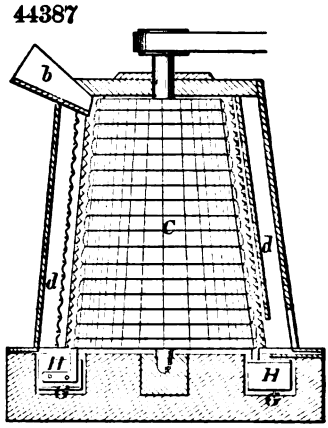

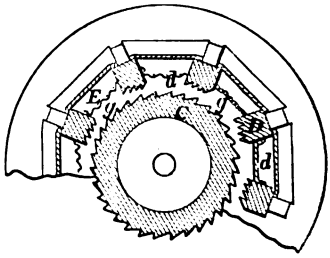

44390

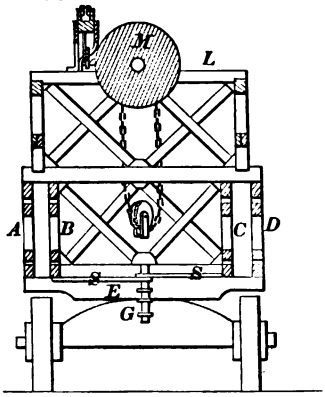

44388

44389

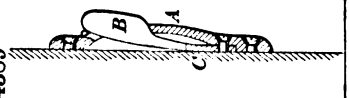

44391

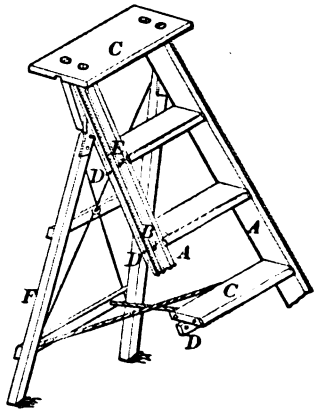

44393

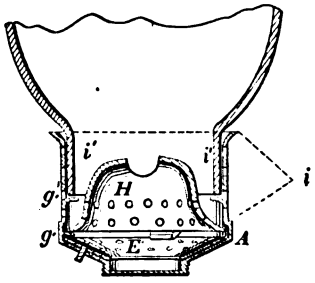

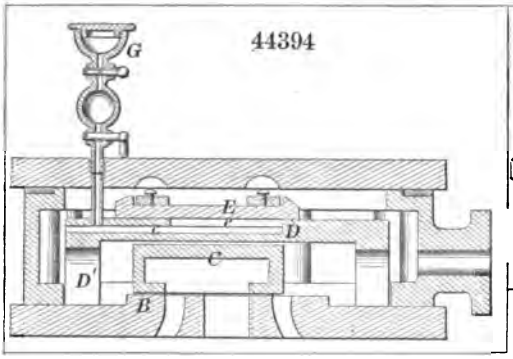
44394
G
E
D
C
D'
B

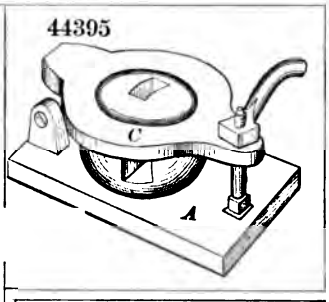
44395
C
A

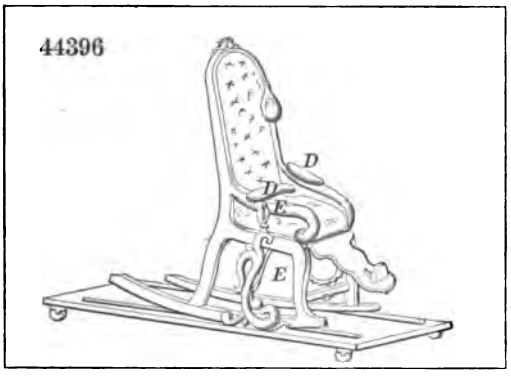
44396
D
D
E
E

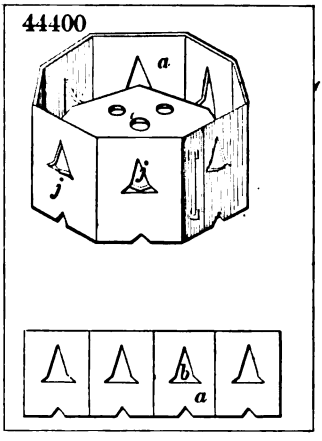
44400
a
j
j
b
a

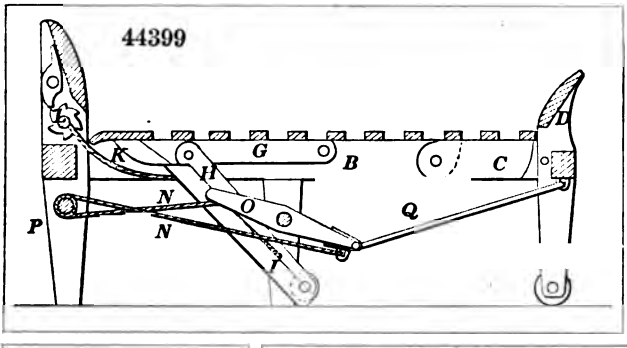
44399
E
K
G
B
C
D
H
N
O
Q
P
N
I

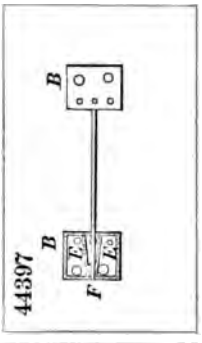
B
B
F
44397

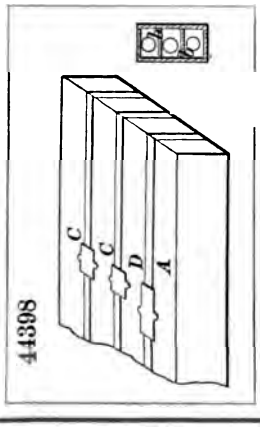
C
C
D
A
44398

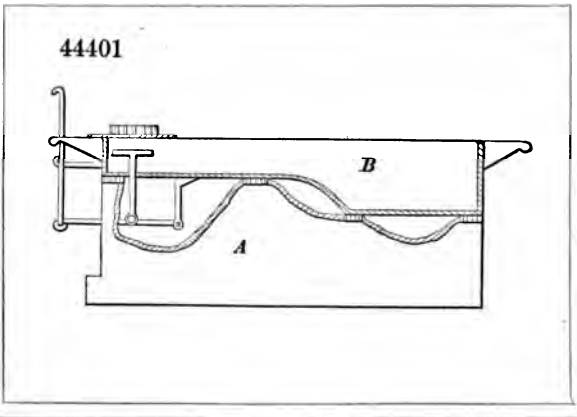
44401
B
A

44402

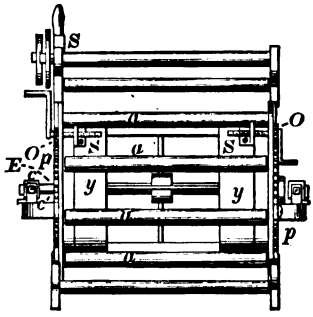

44403

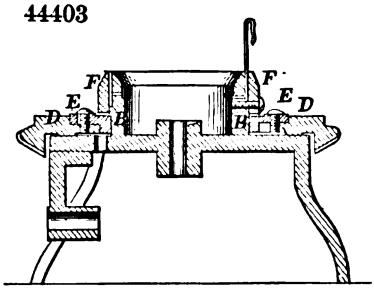

44406

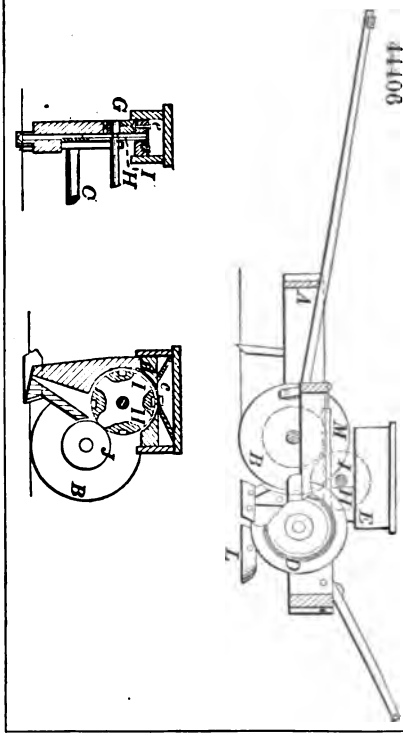

44404

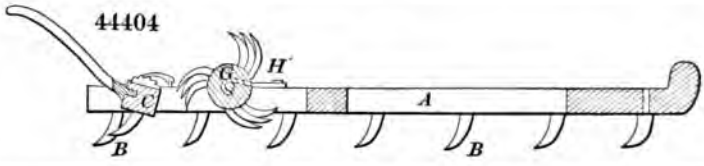

44407

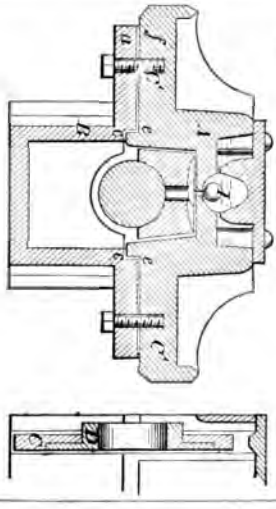

44408

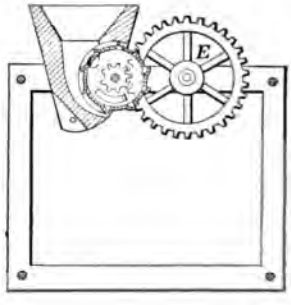

44409

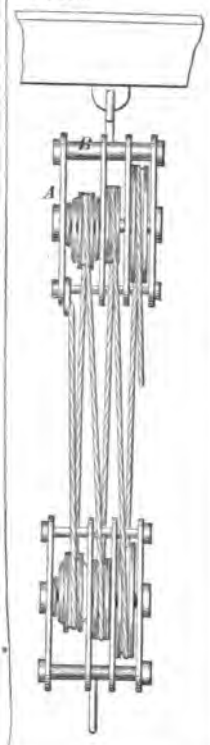

44410

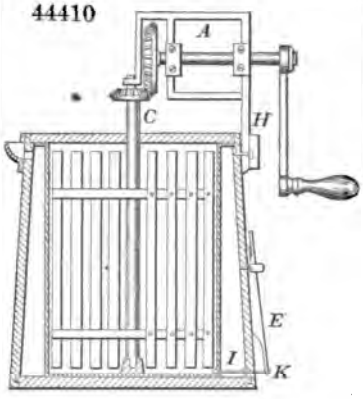

44411

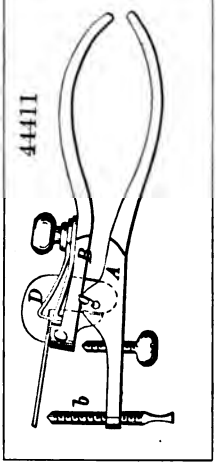

44413

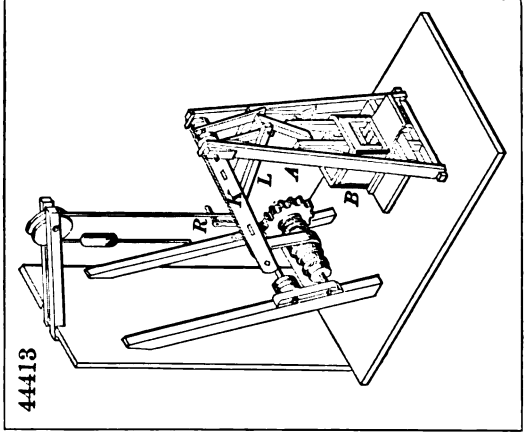

44416

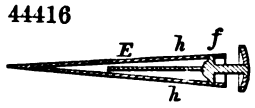

44412

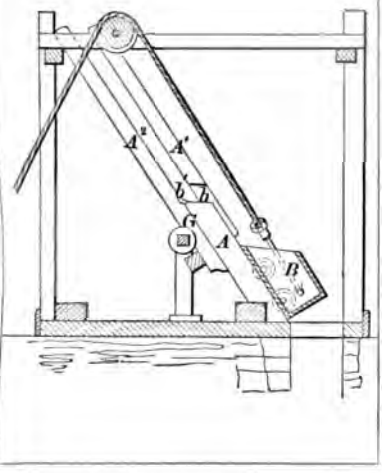

44414

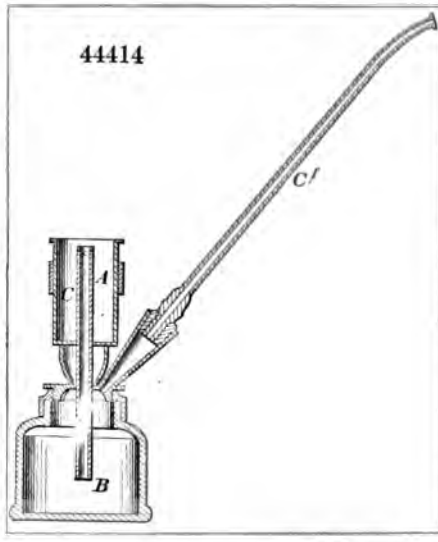

44417

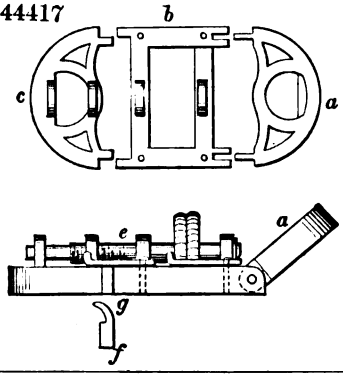

44418

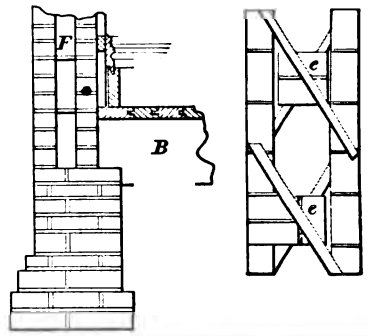

44419

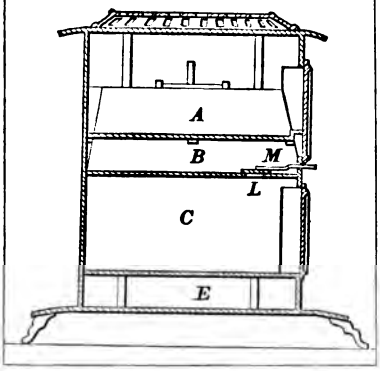

44421

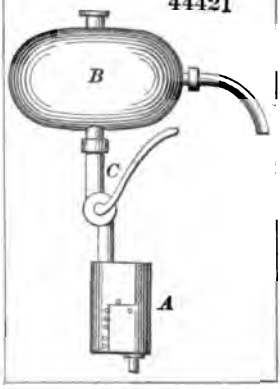

44420

44424

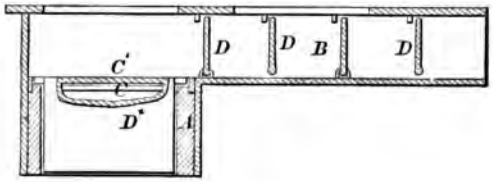

44422

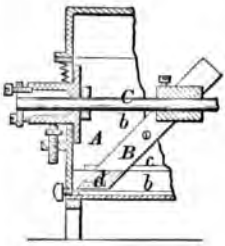

44423

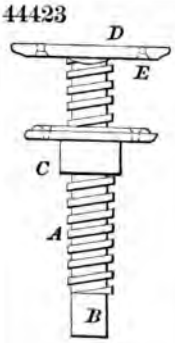

44425

44426

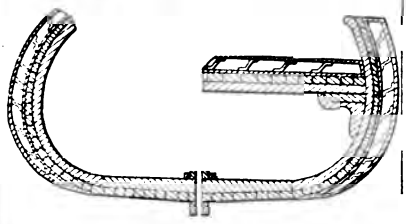

44430

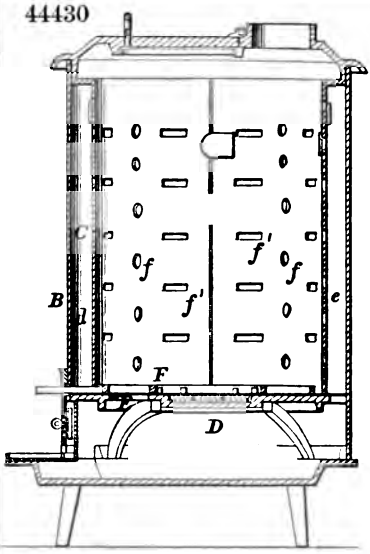

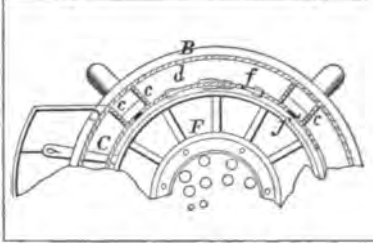

44431

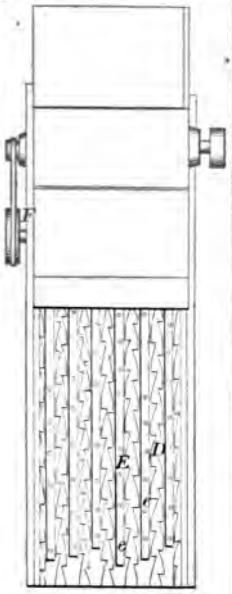

44427

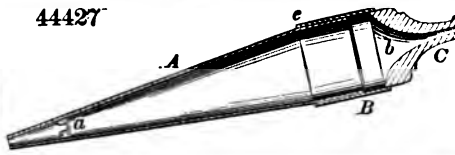

44429

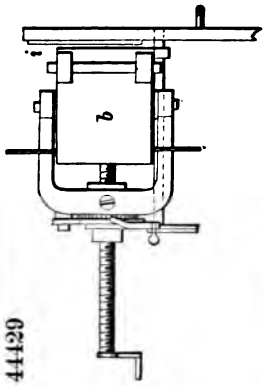

44428

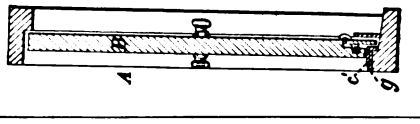

44432

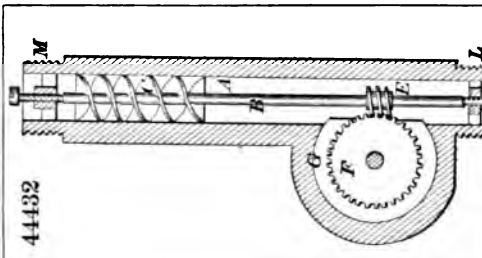

44433

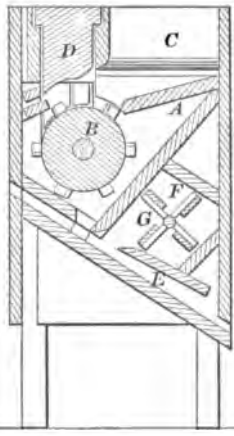

44437

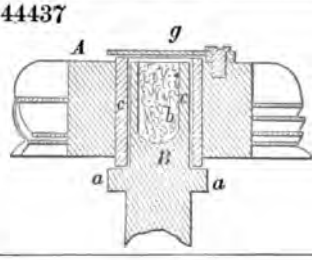

44438

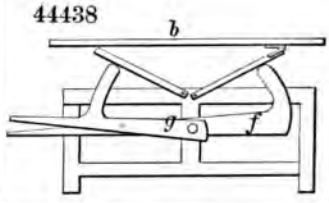

44434

44440

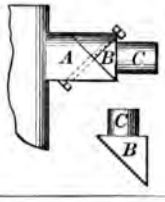

44441

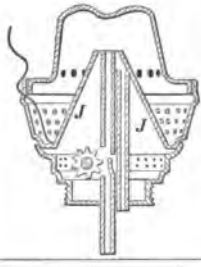

44439

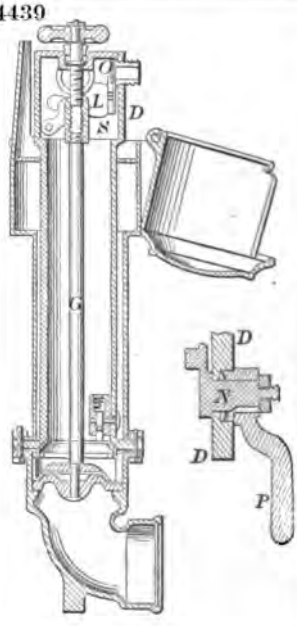

44442

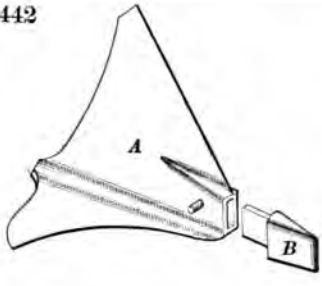

44443

44444

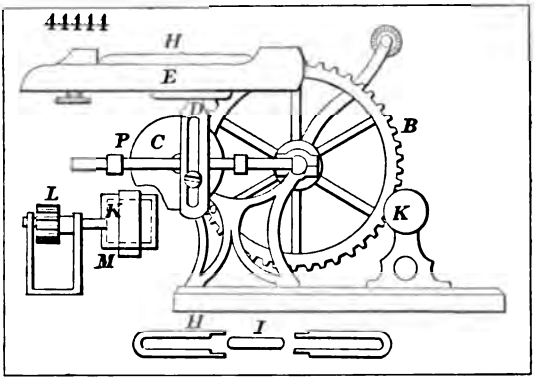

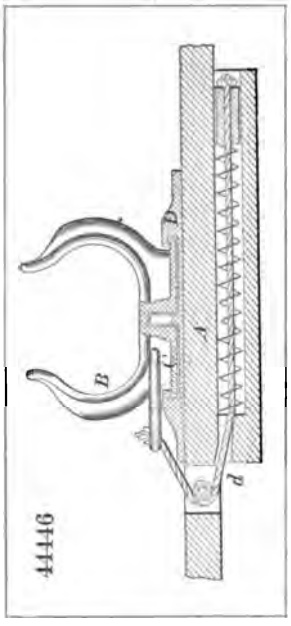

44446

44445

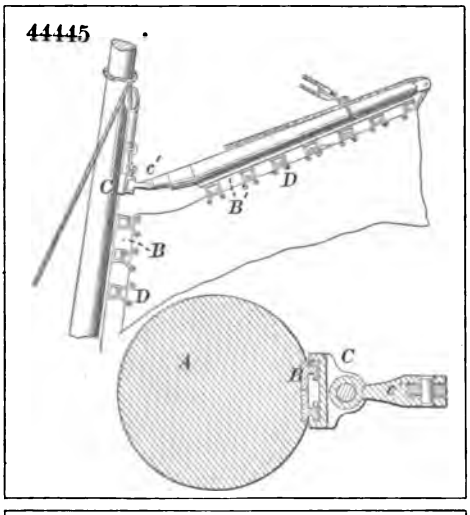

44447

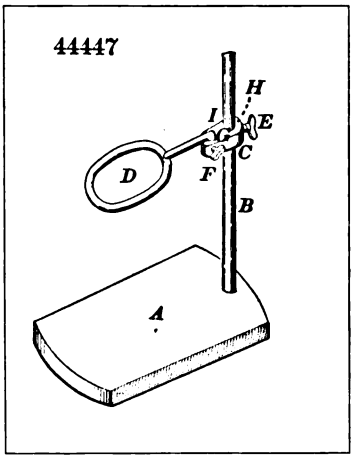

44449

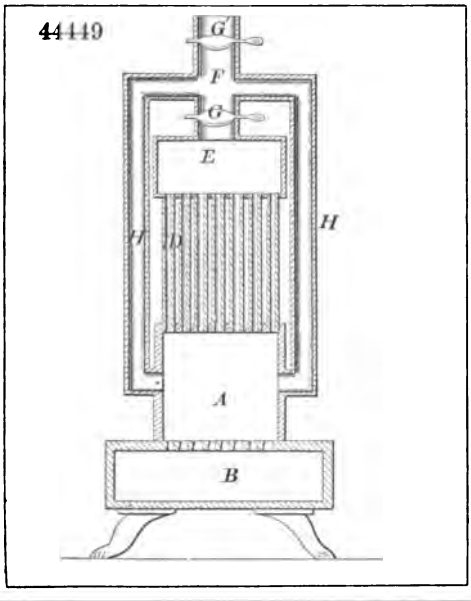

44448

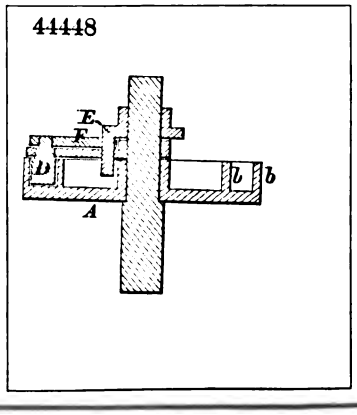

44450

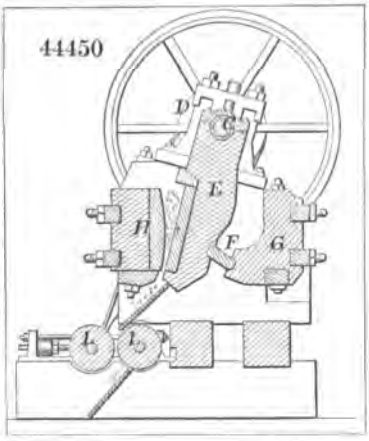

44452

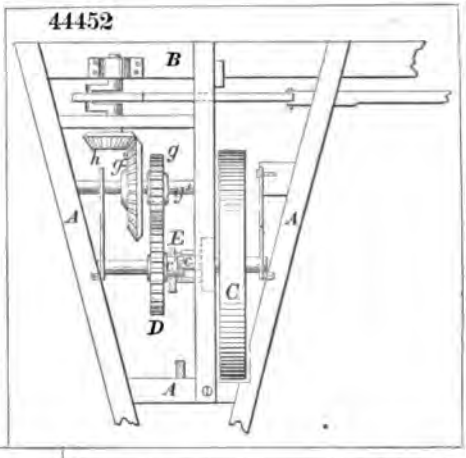

44453

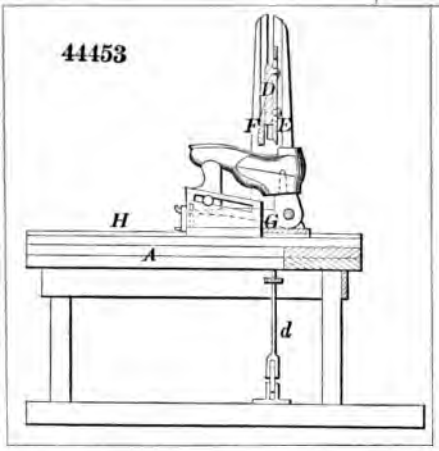

44451

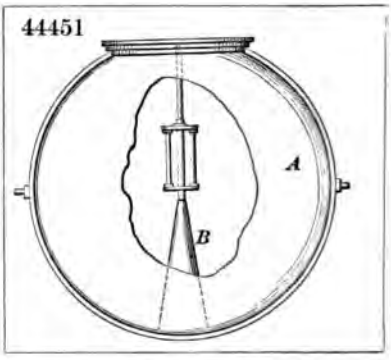

44455

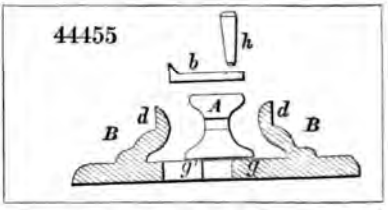

44454

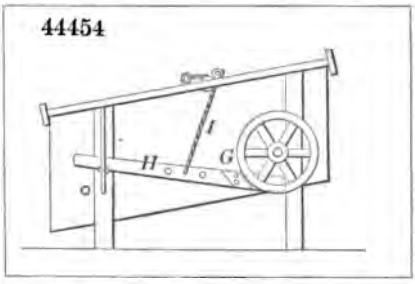

44459

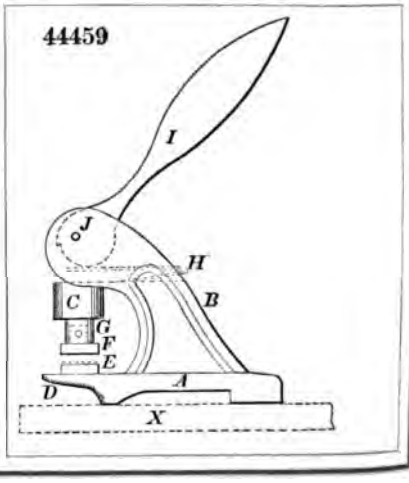

44458

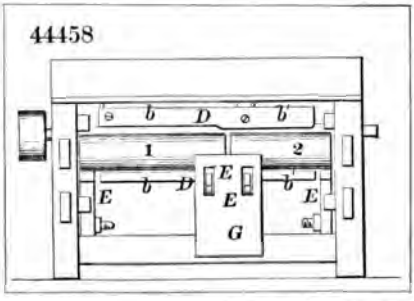

44460

44463

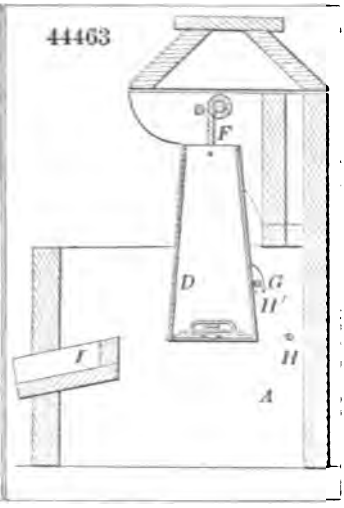

44465

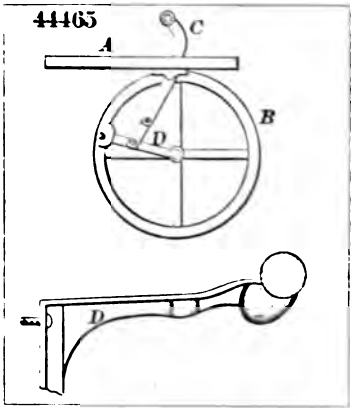

44464

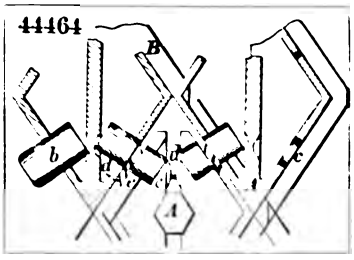

44461

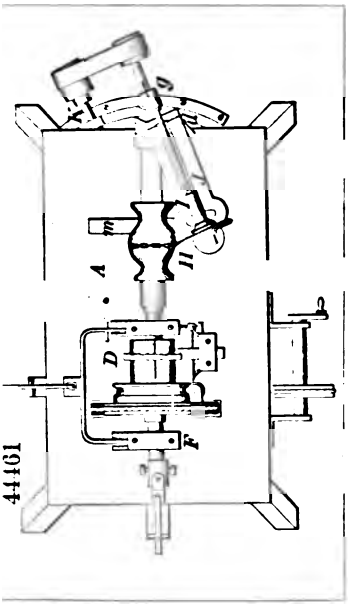

44462

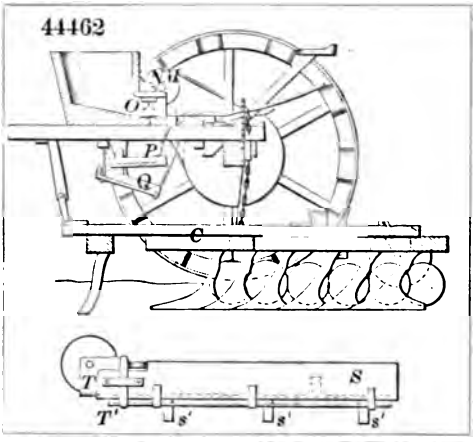

44466

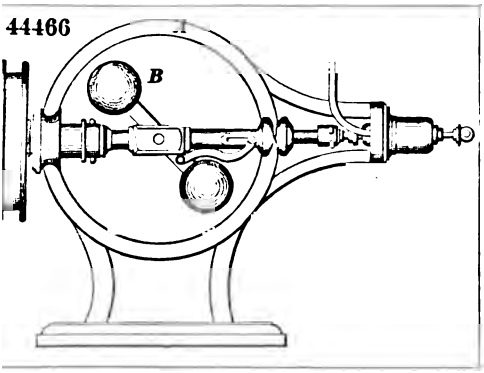

44467

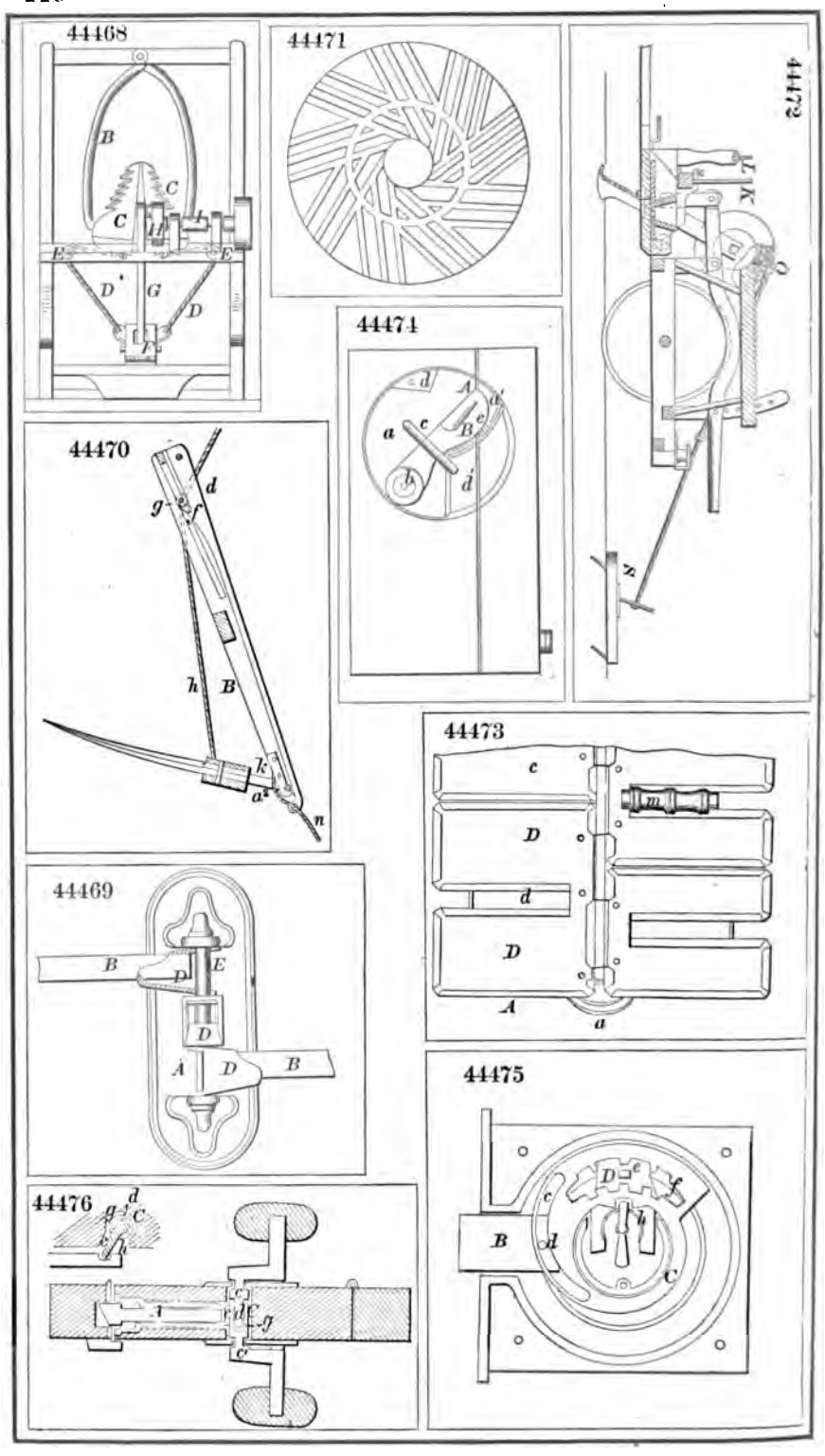
44468
44471
44472
44474
44470
44473
44469
44475
44476

44477

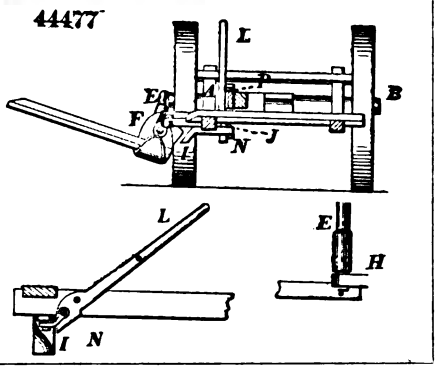

44480

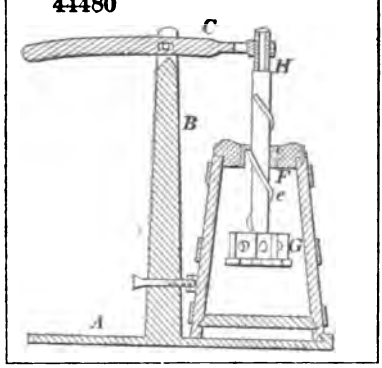

44478

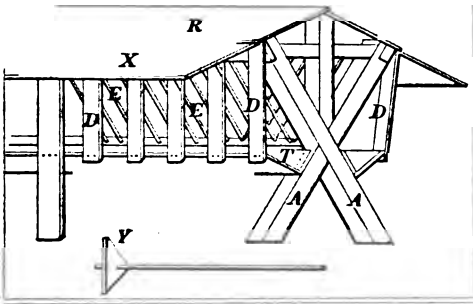

44481

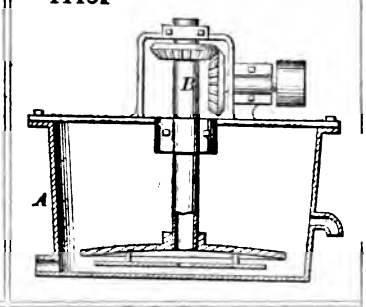

44479

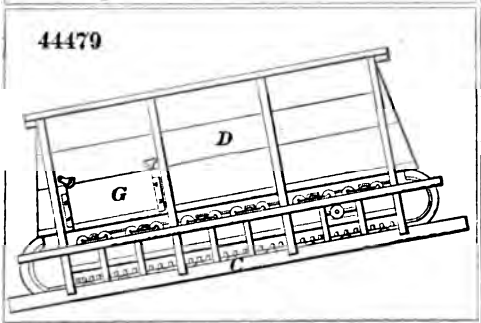

44482

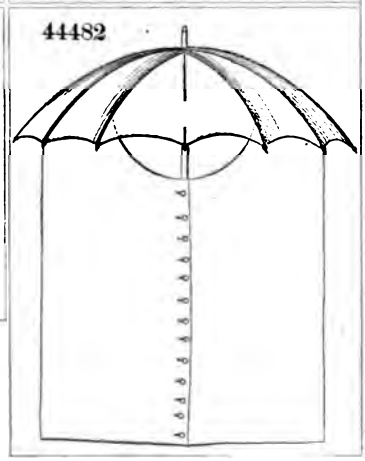

44483

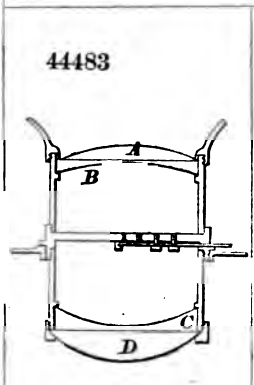

44484

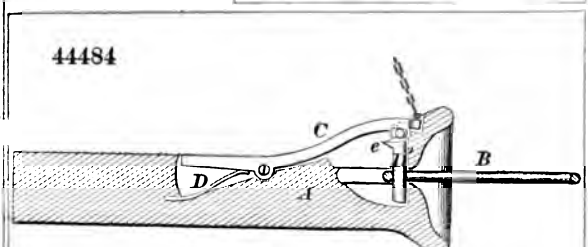

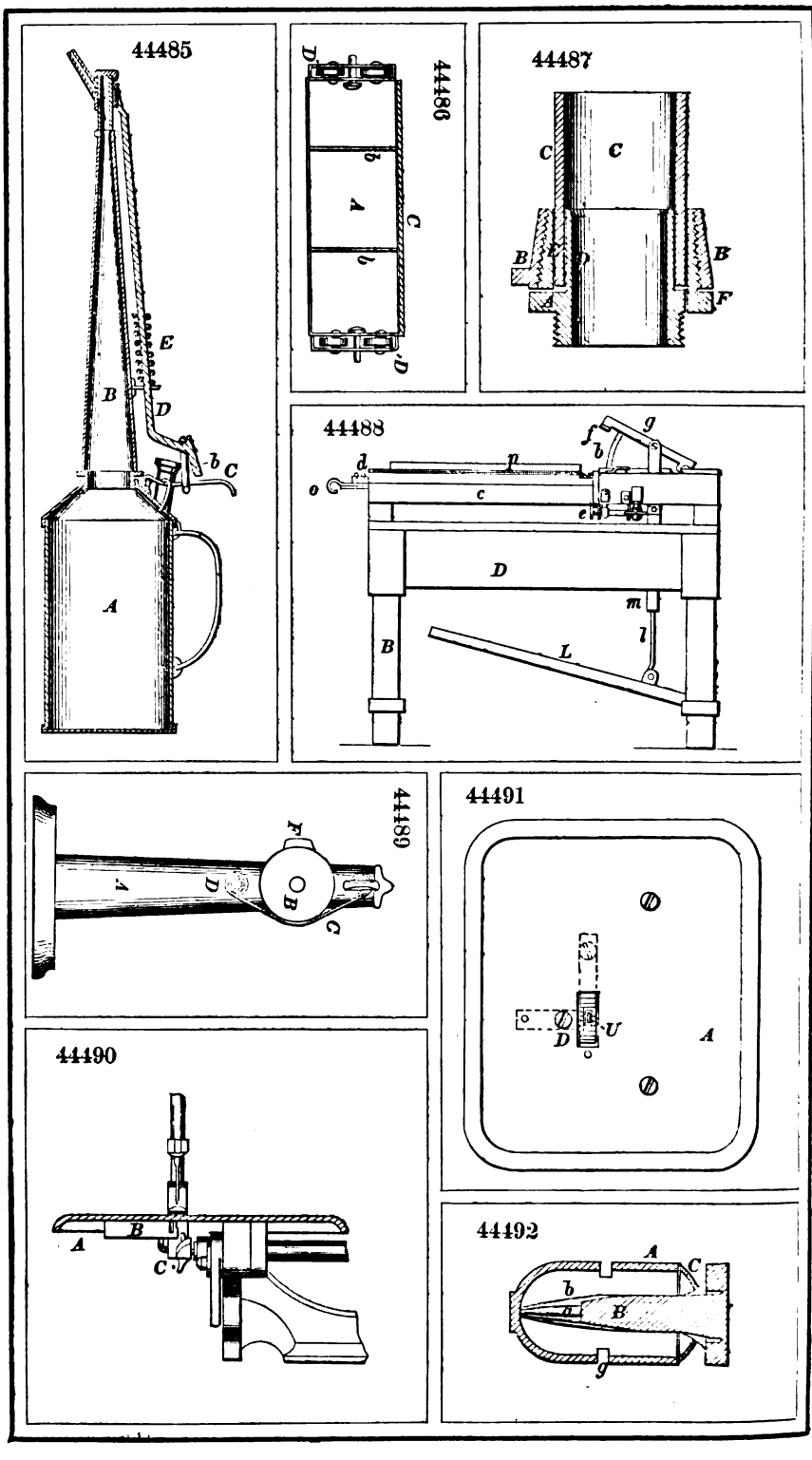
44485
E
B
D
b
C
A
44486
D
b
A
C
b
D
44487
C
C
B
E
D
B
A
F
44488
g
f
b
d
n
o
c
e
D
m
l
B
L
44489
F
A
D
B
C
44490
A
B
C
44491
U
D
A
44492
A
C
b
a
B
g

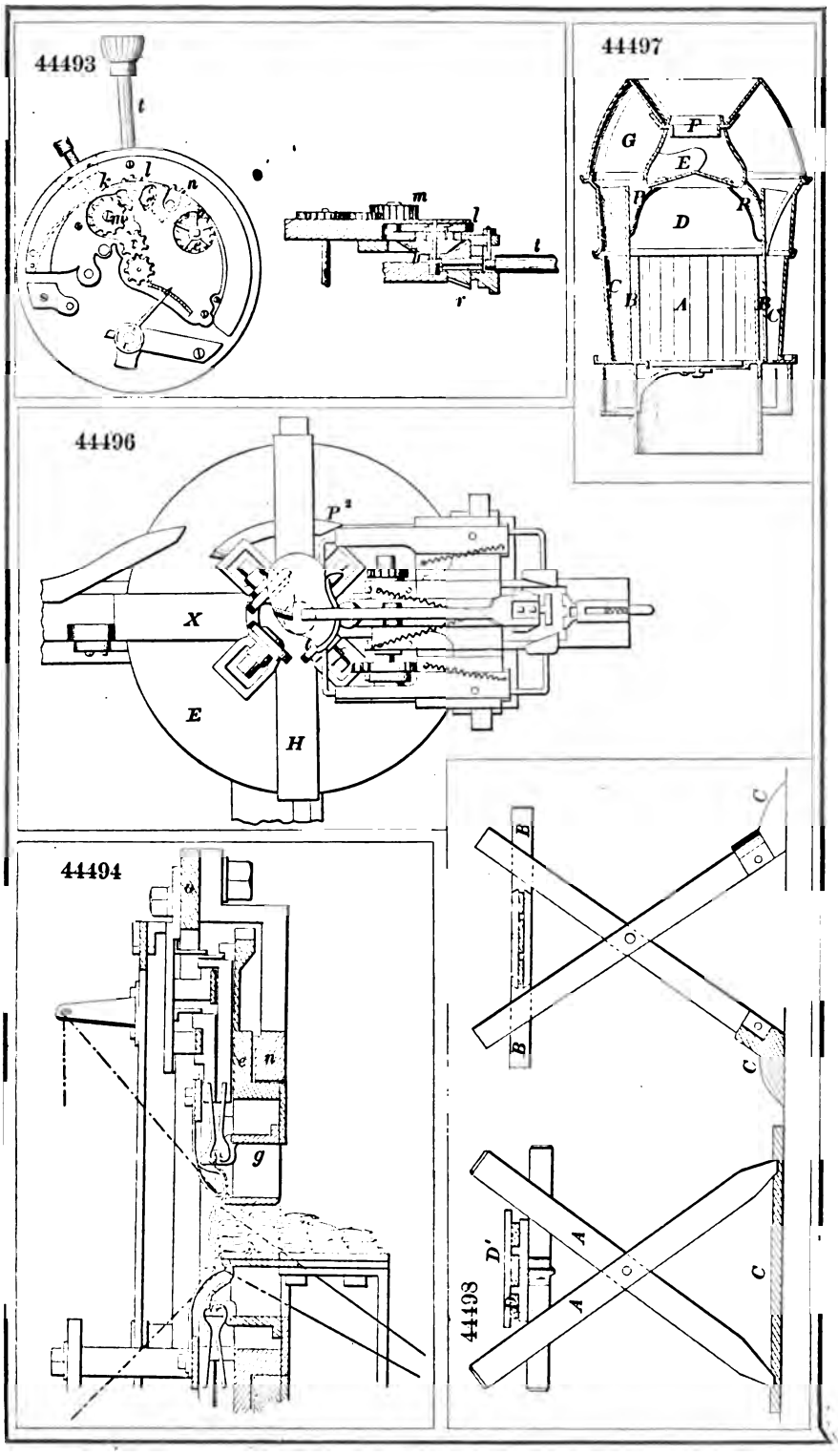
44493
44497
44496
44494
44493

44499

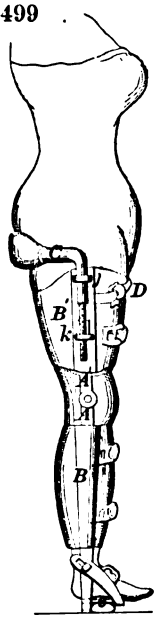

44501

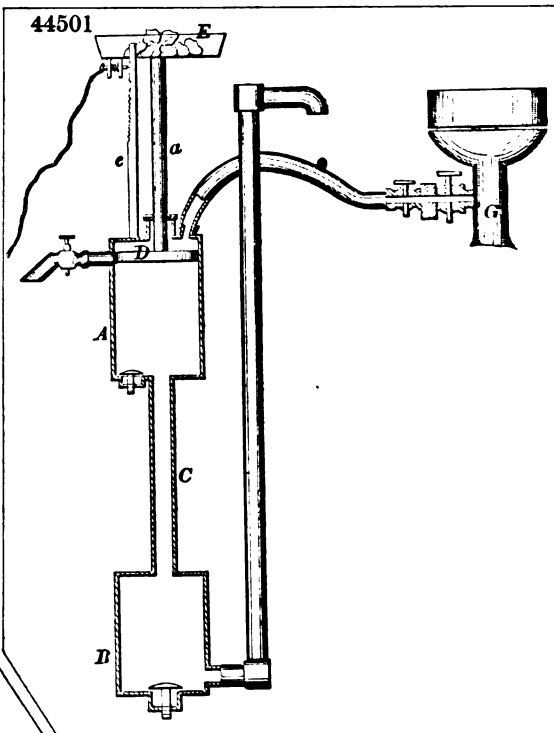

44500

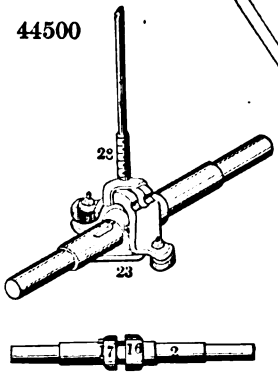

44502

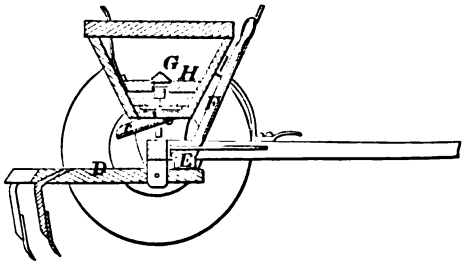

44503

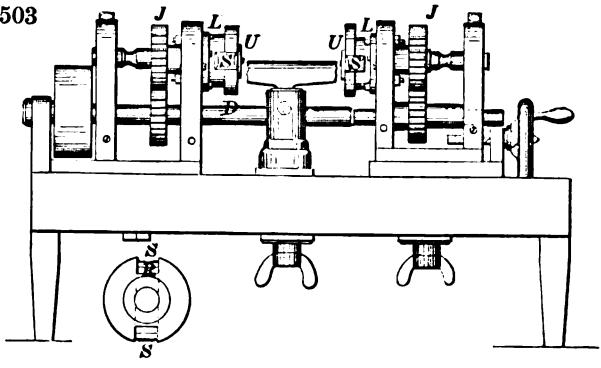

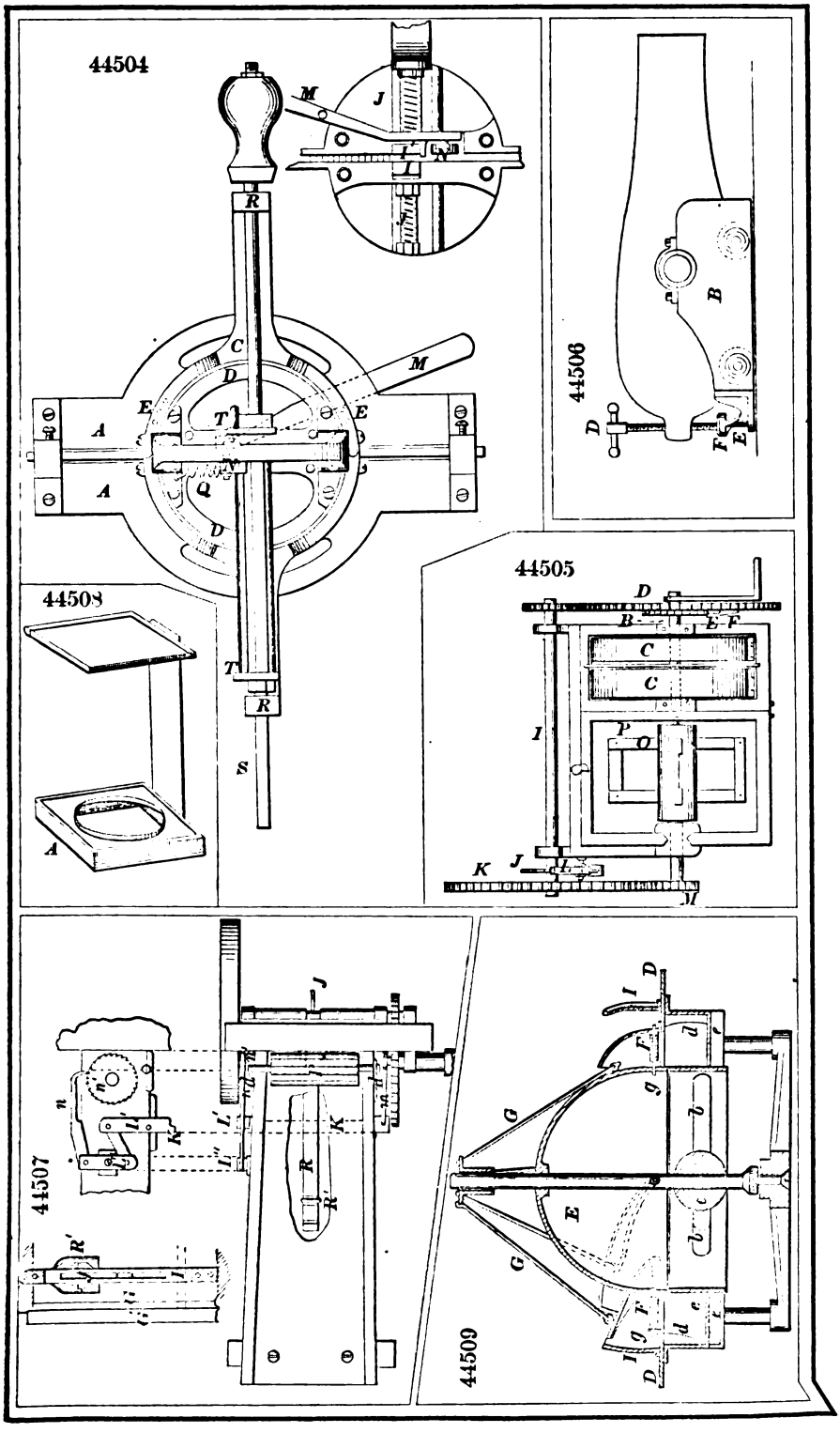
44504
44506
44505
44508
44507
44509

44510

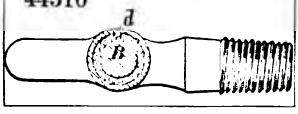

44513

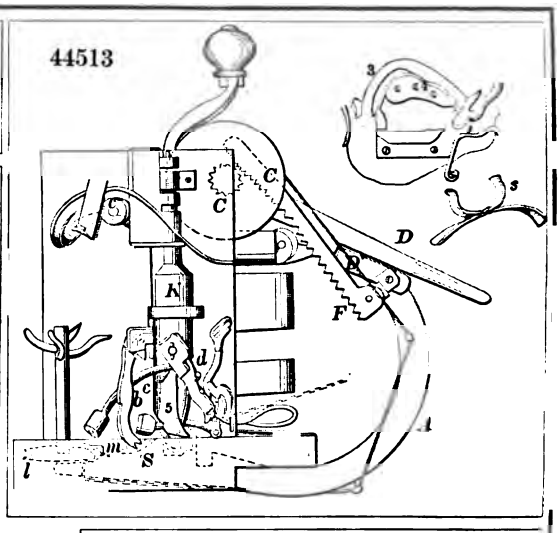

44511

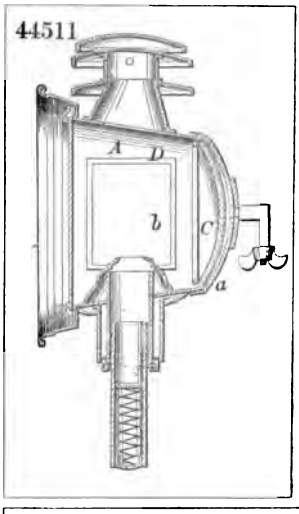

44512

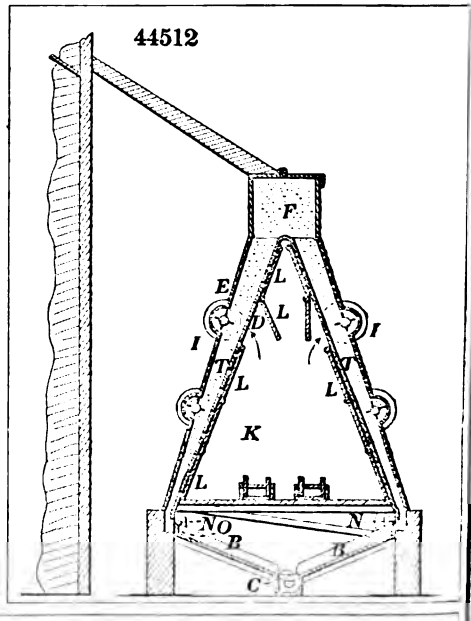

44514

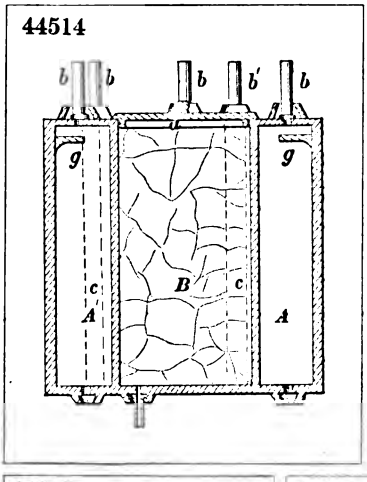

44515

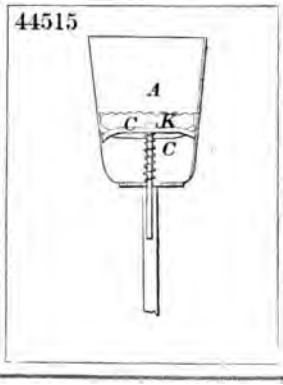

44516

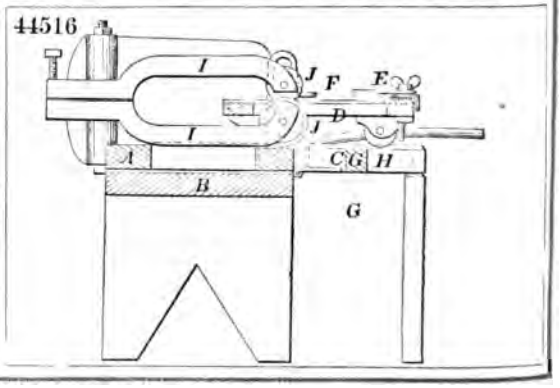

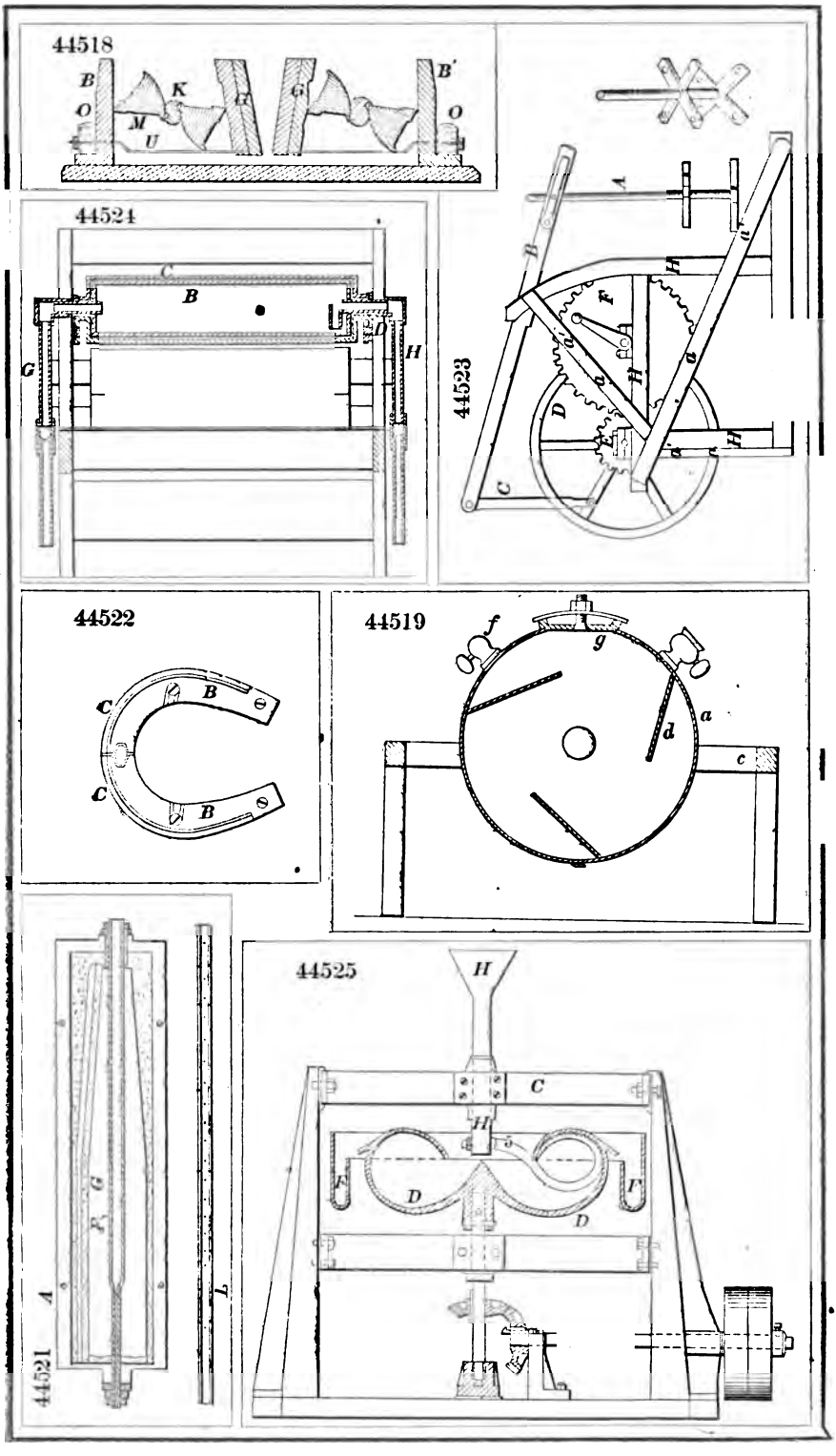
44518
44524
44523
44522
44519
44521
44525

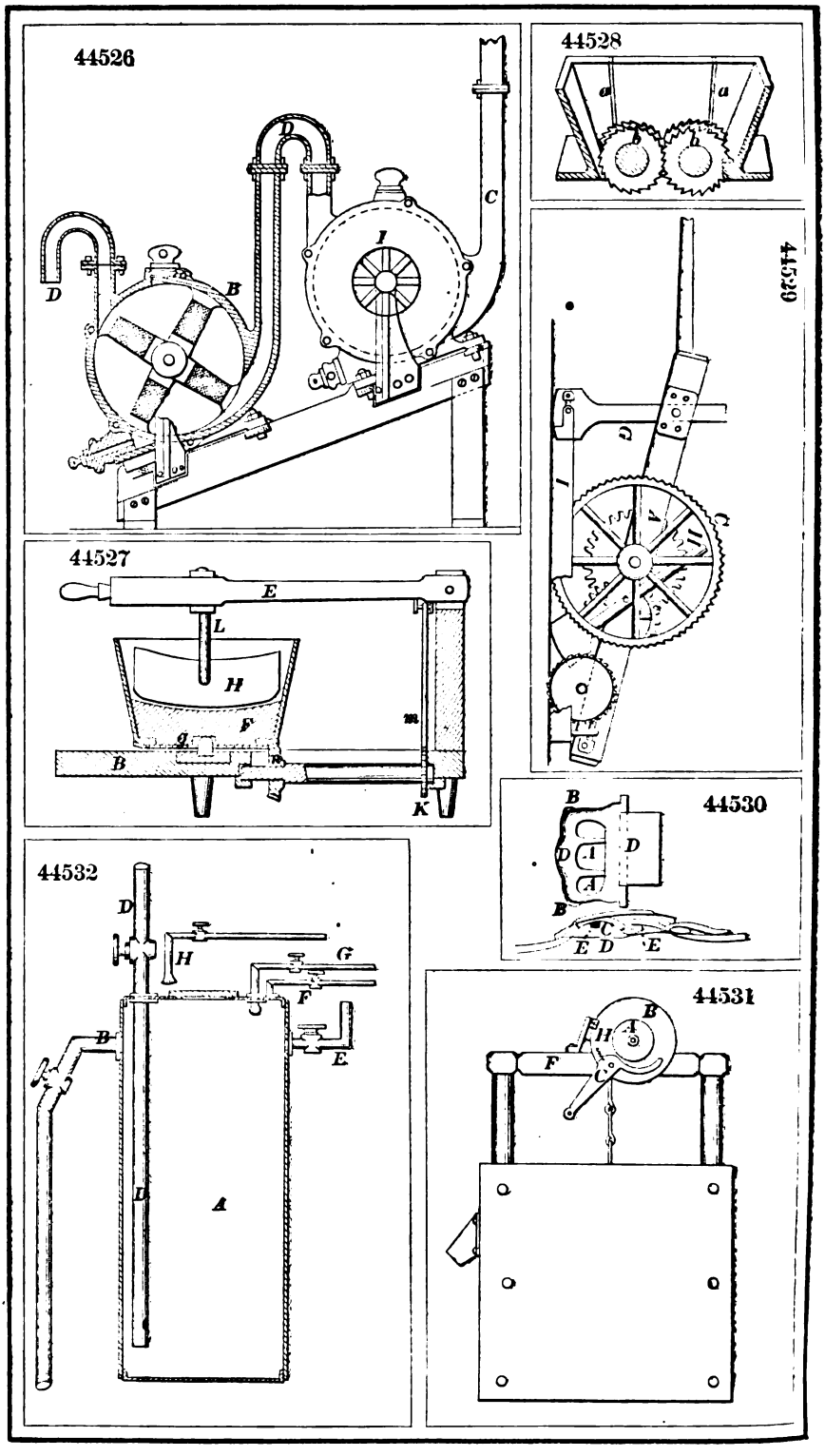
44526
D
B
D
C
I
44528
a
a
b
b
44529
C
I
V
II
III
IV
T
E
44527
E
L
H
F
G
B
K
44530
B
D
A
D
A
B
C
E
D
E
44532
D
H
G
F
B
E
D
A
44531
B
A
H
C
F
C

44588
44589
44590

44541

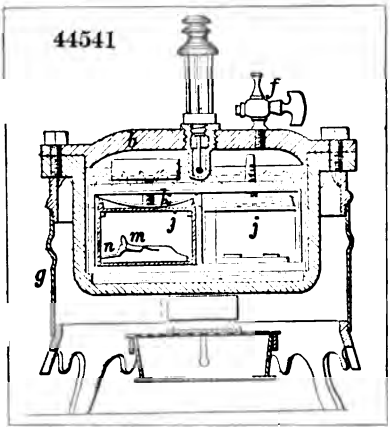

44545

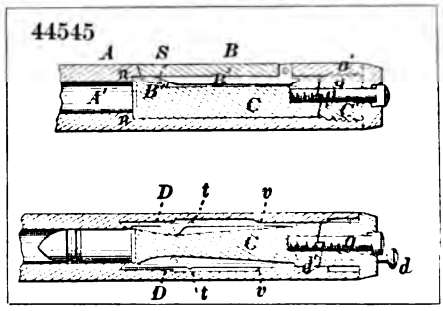

44544

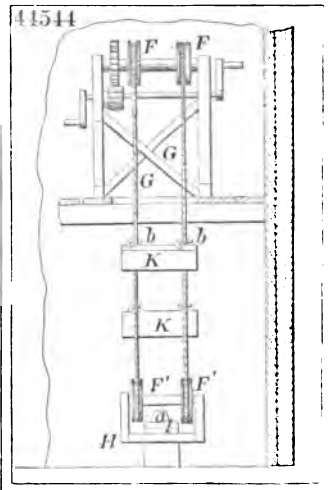

44542

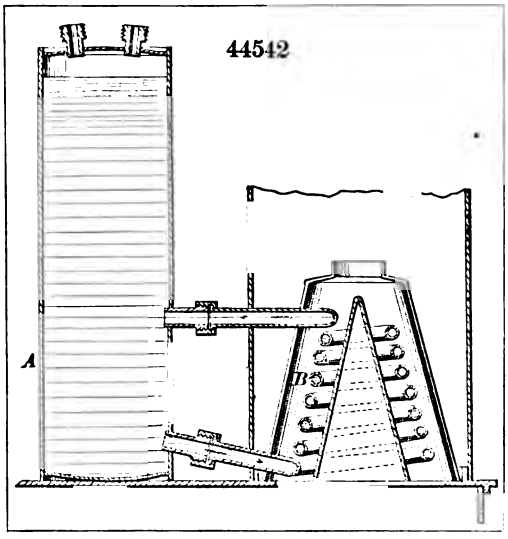

44546

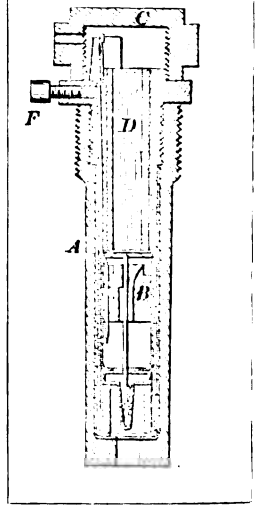

44548

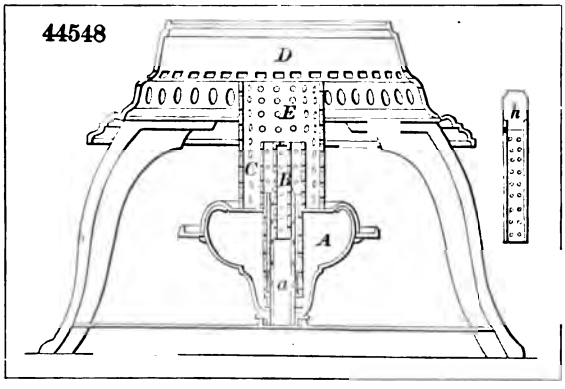

44547

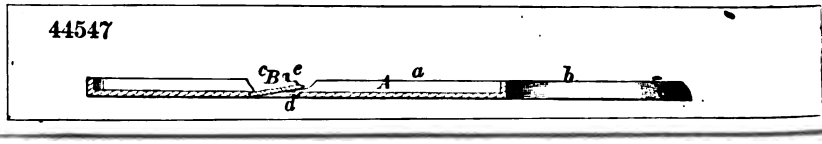

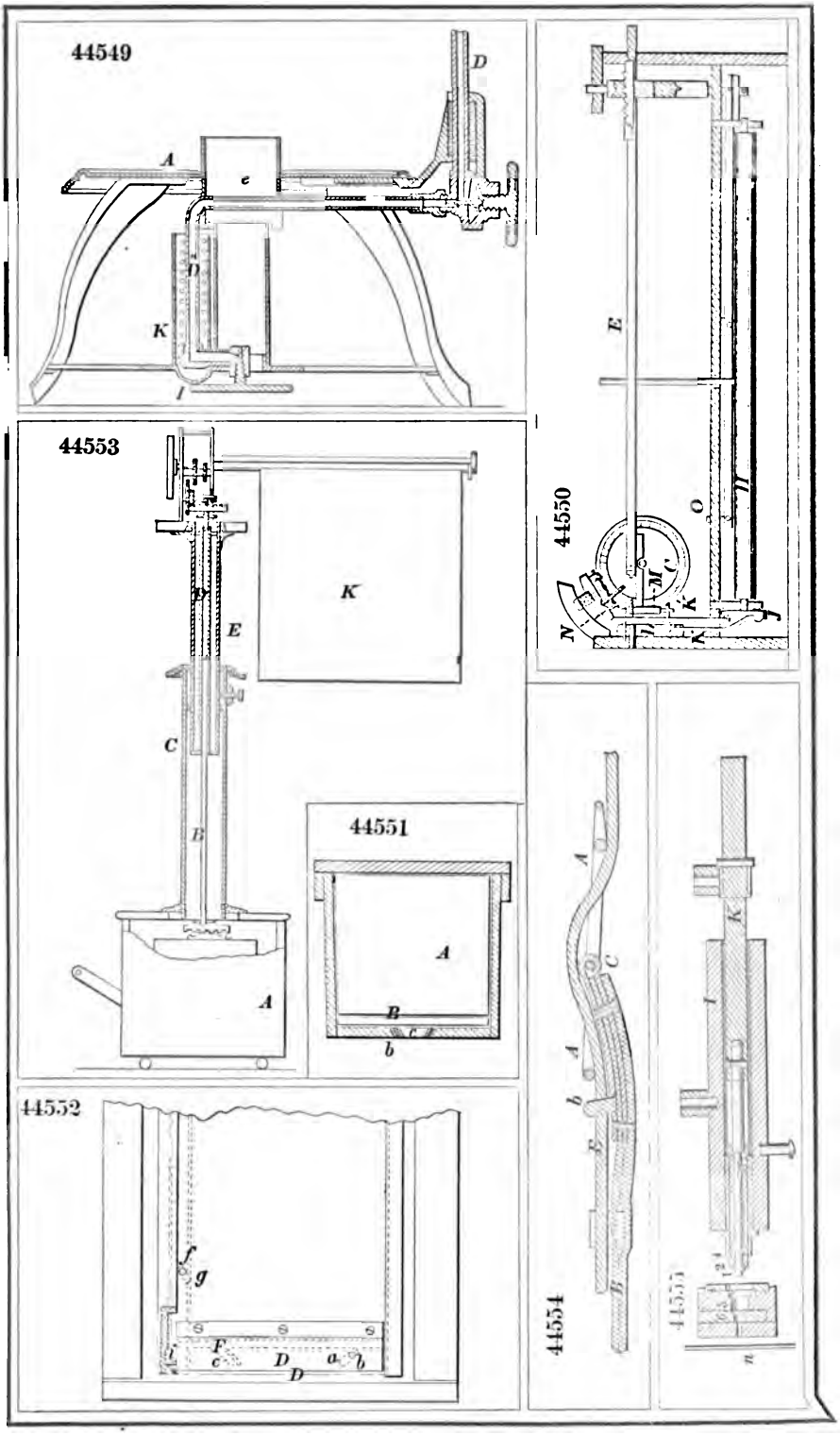
44549
44550
44551
44552
44553
44554
44555

44556

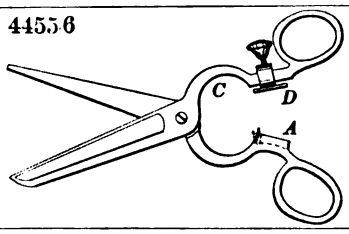

44557

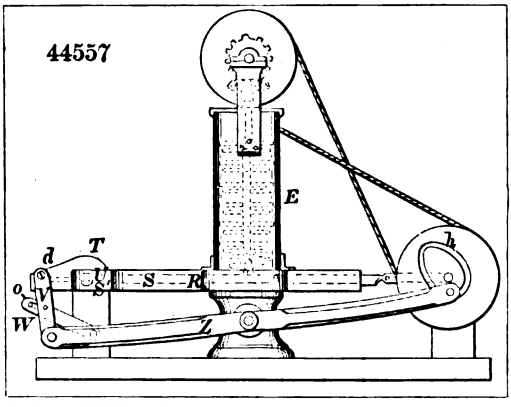

44558

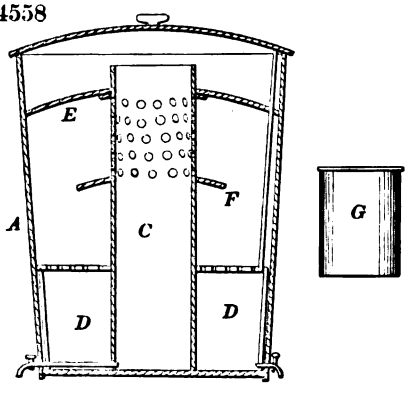

44559

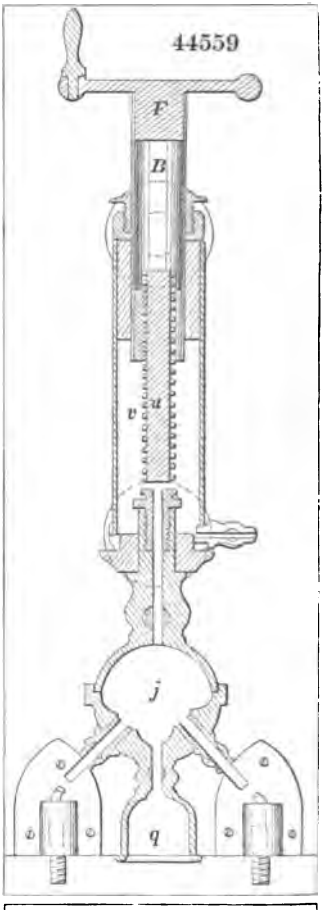

44560

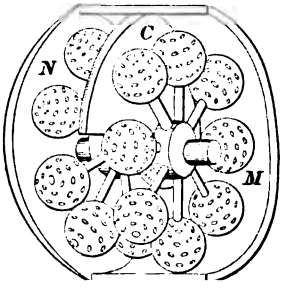

44562

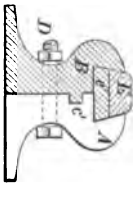

44561

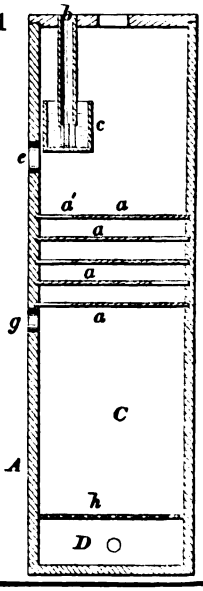

44563

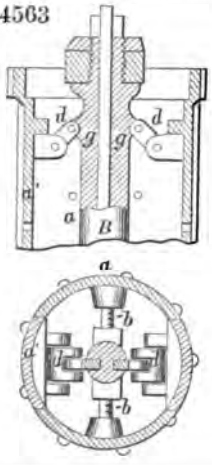

44567

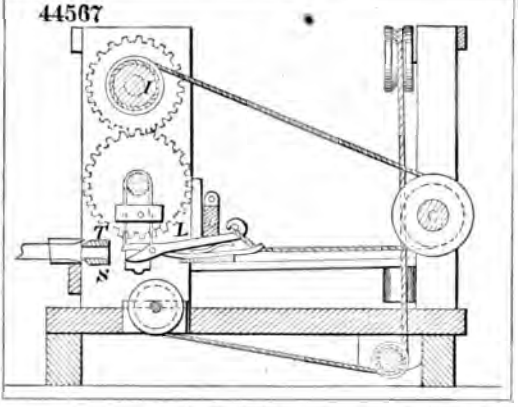

44565

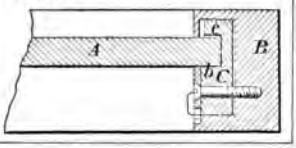

44564

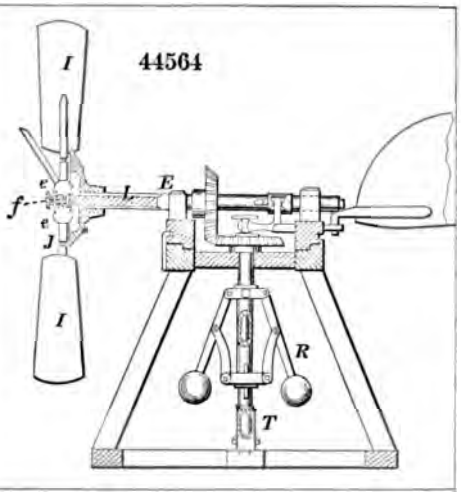

44566

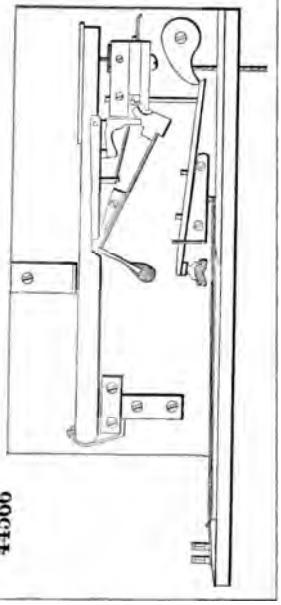

44568

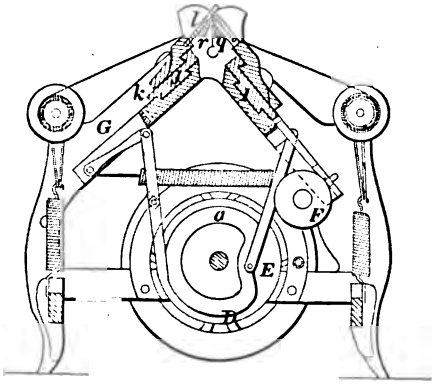

44569

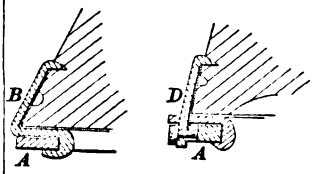

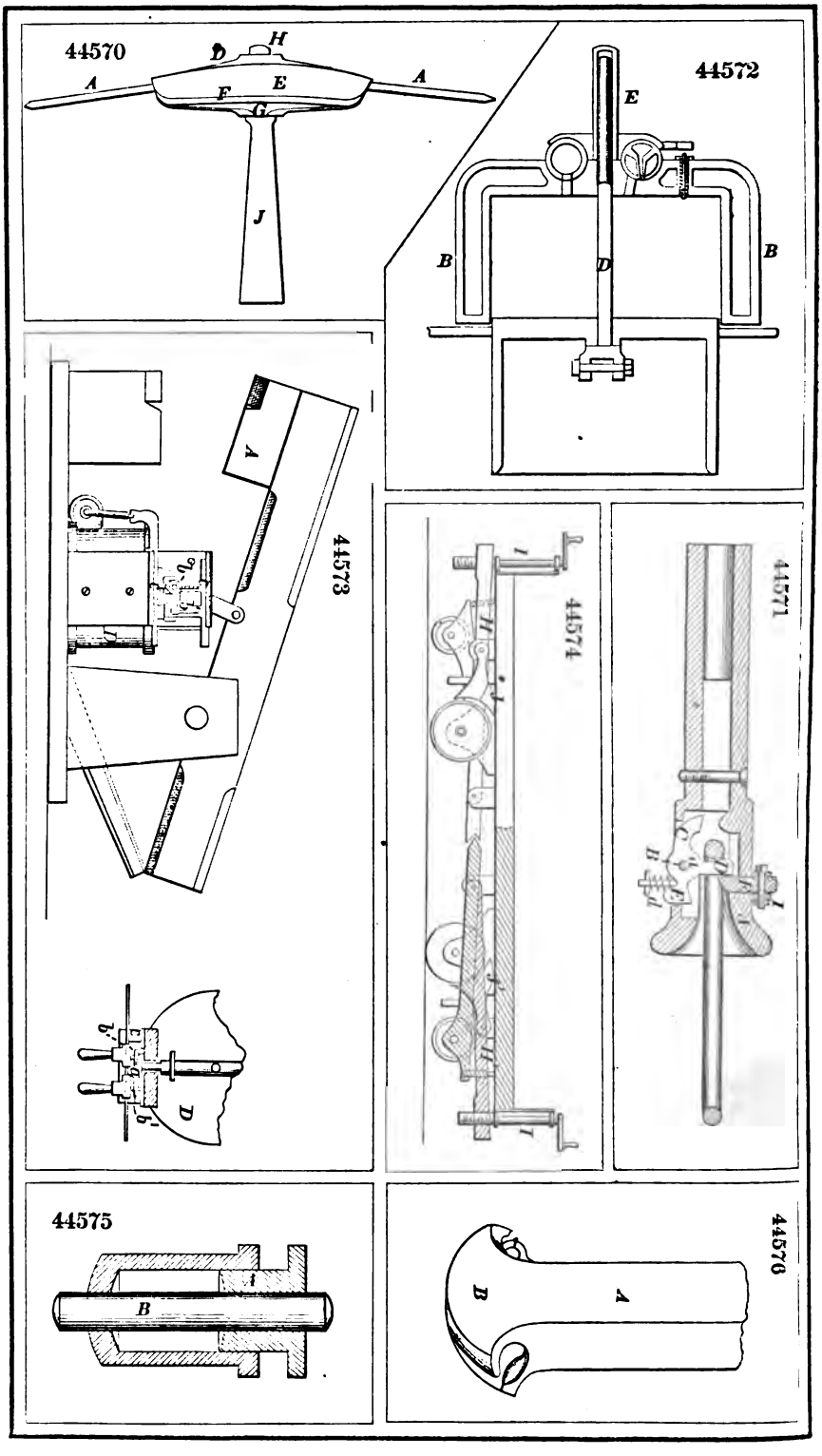
44570
44572
44571
44573
44574
44575
44576

44577

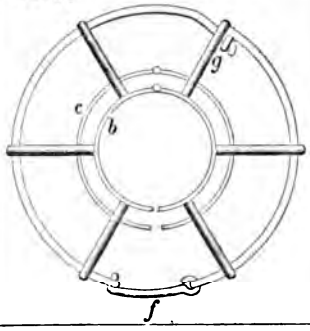

44578

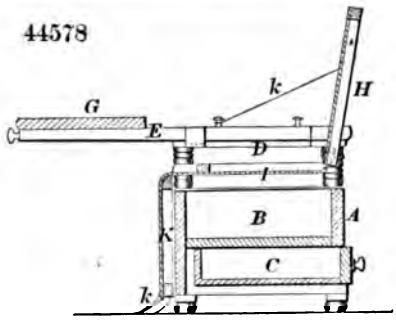

44579

44580

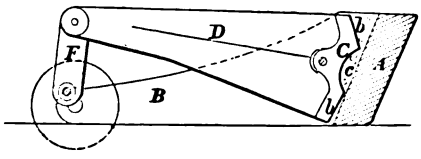

44581

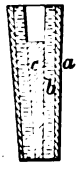

44584

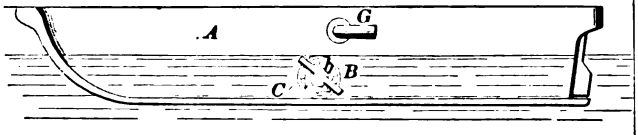

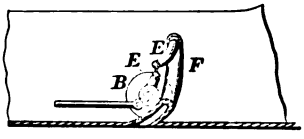

44582

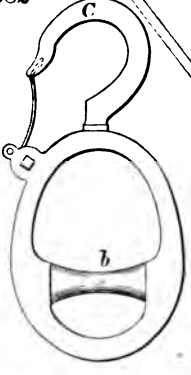

44585

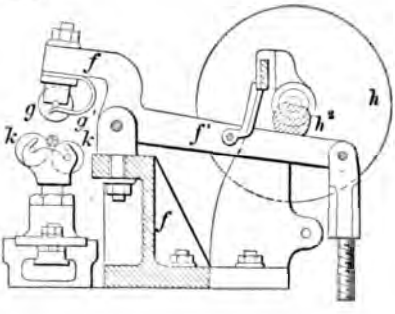

44586

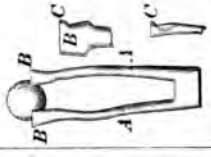

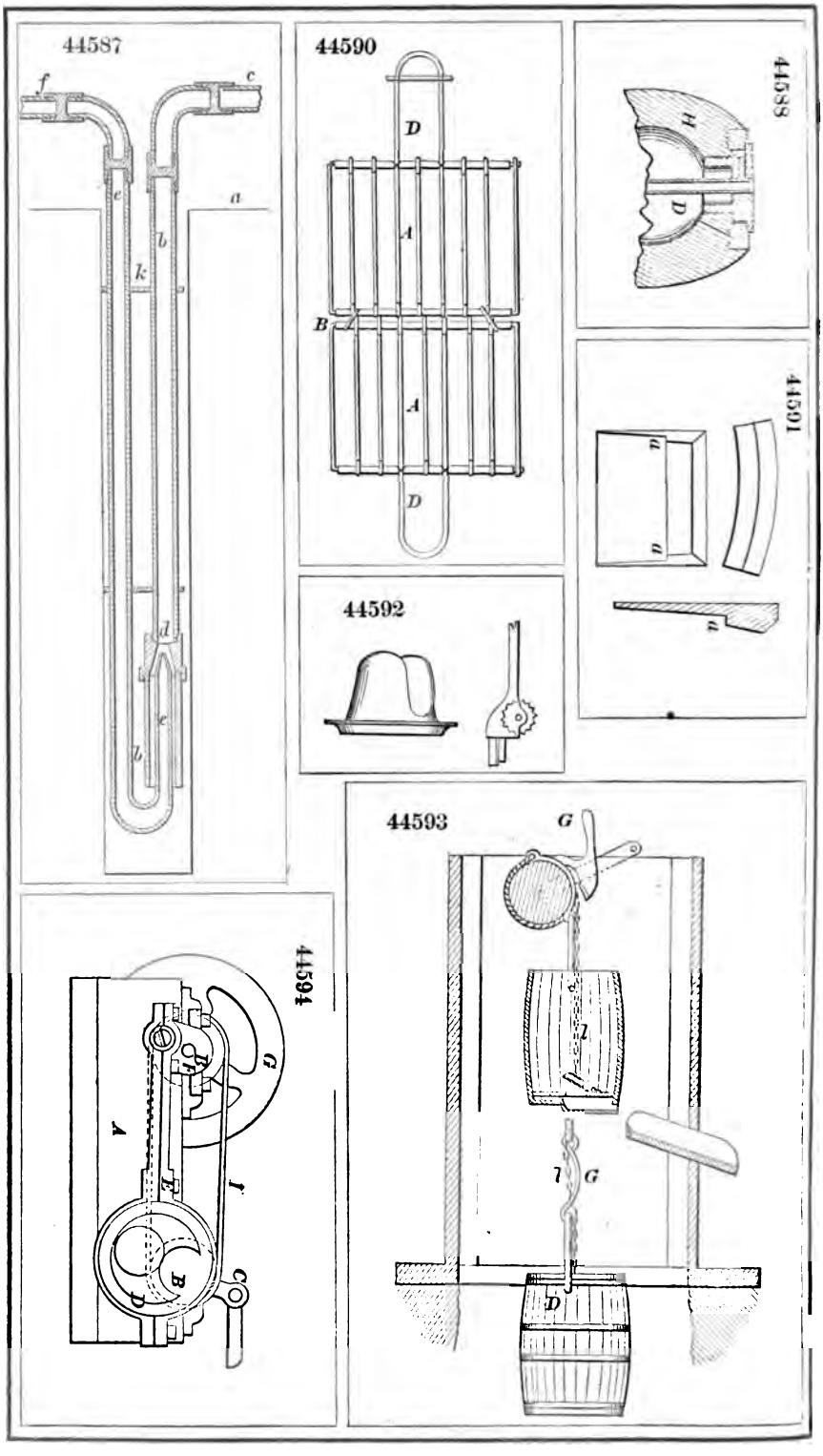
44587
44590
44588
44591
44592
44593
44594

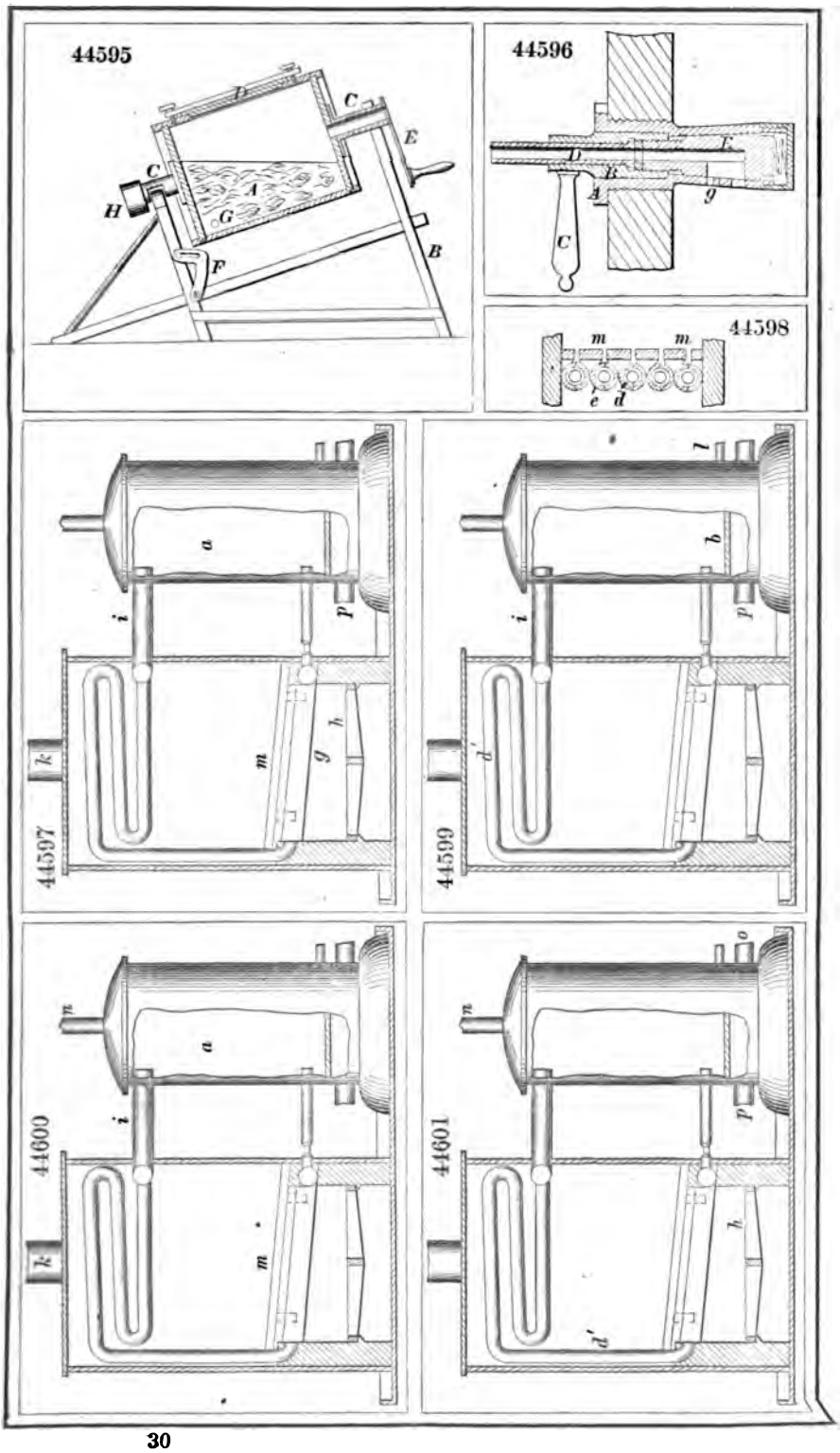
44595
44596
44597
44598
44599
44600
44601

44602

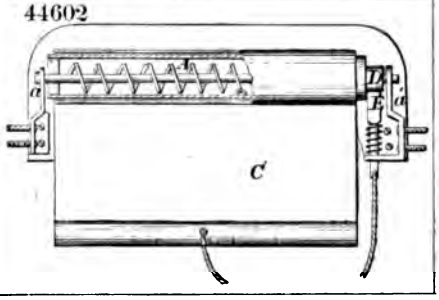

44603

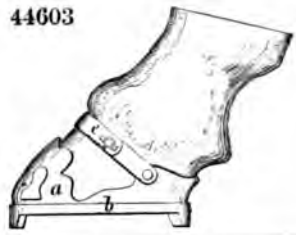

44604

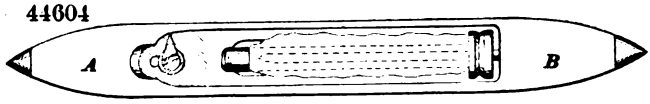

44608

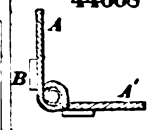

44605

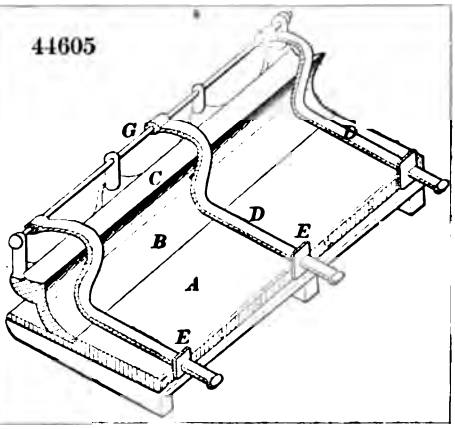

44607

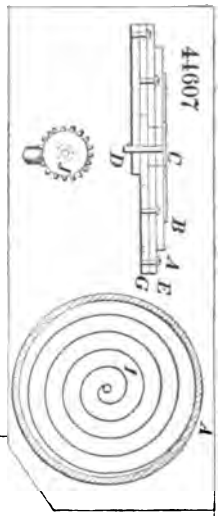

44610

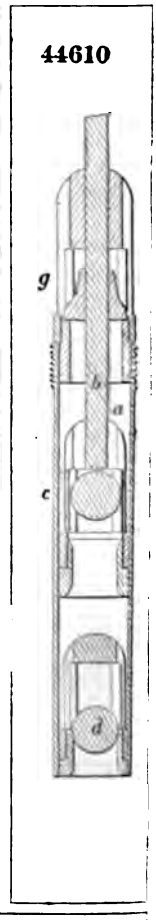

44606

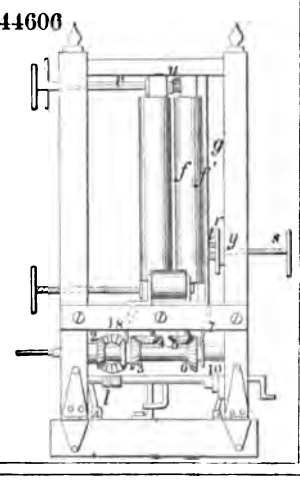

44609

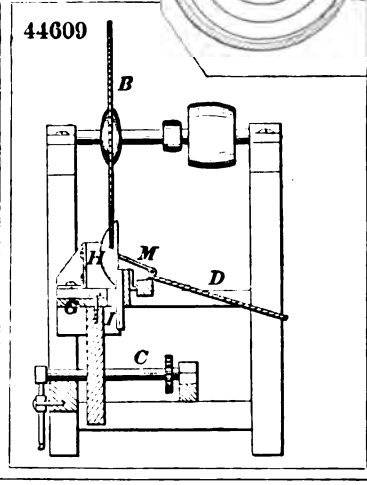

44611

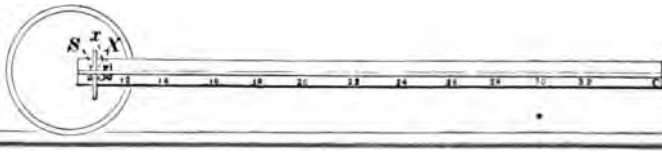

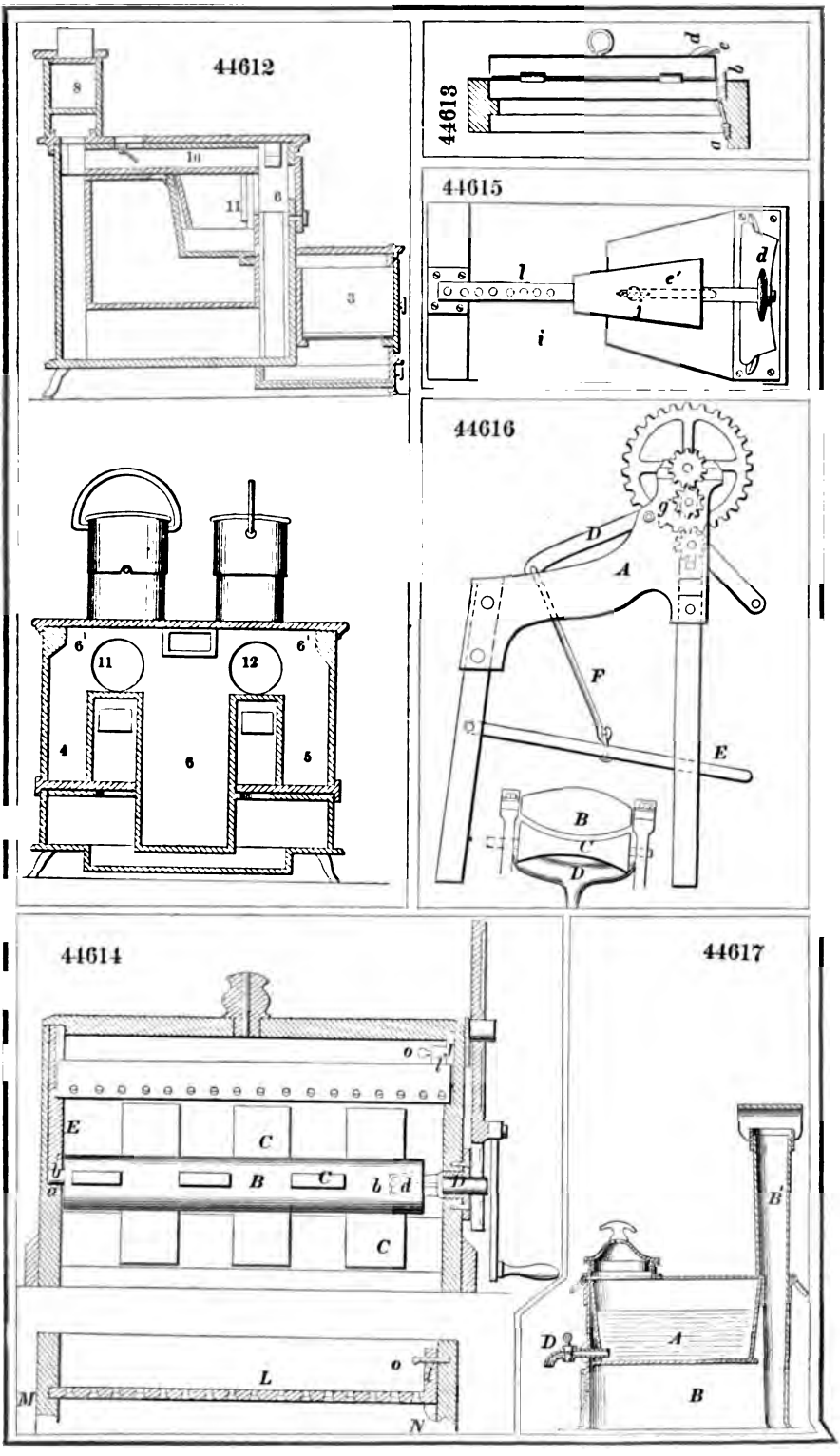
44612
8
10
11
6
3
44613
d
e
b
a
44615
l
e'
d
i
44616
g
D
A
F
E
B
C
D
6'
11
12
6'
4
6
5
44614
o
E
C
B
C
b
d
C
L
o
M
N
44617
B'
D
A
B

44618

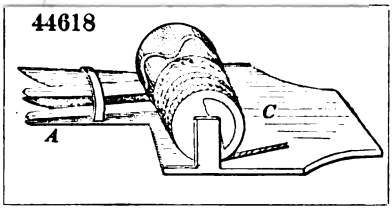

44621

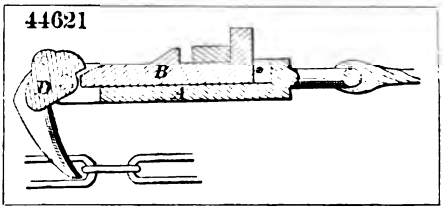

44619

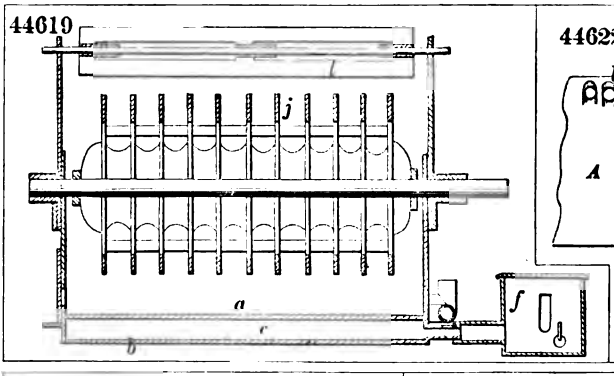

44622

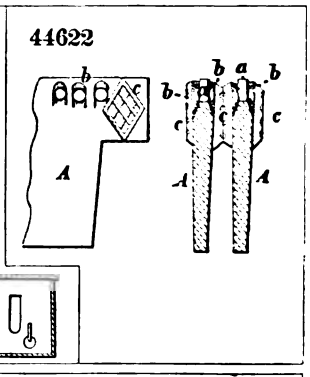

44623

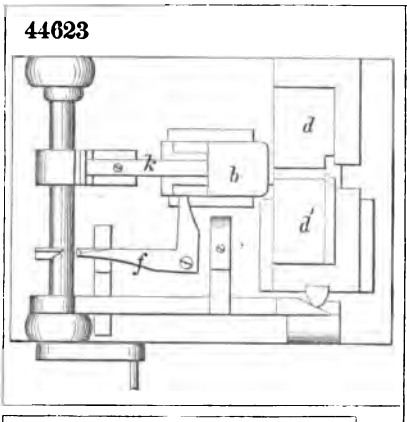

44620

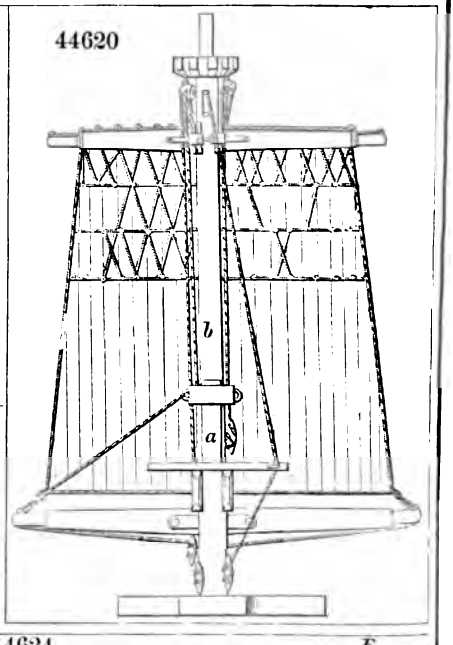

44625

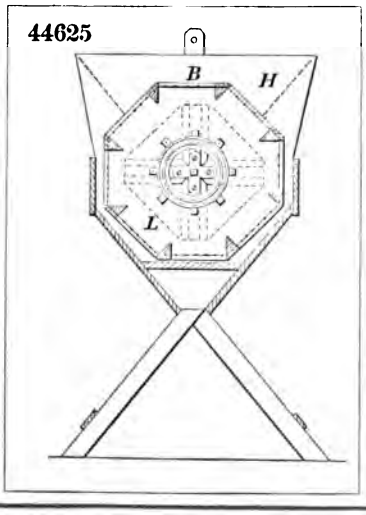

44624

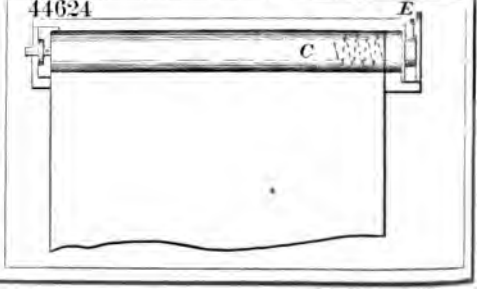

44626

44628

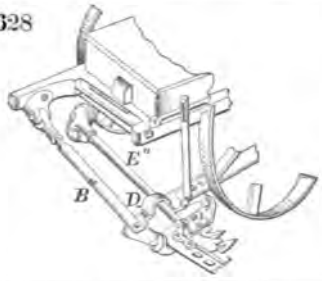

44630

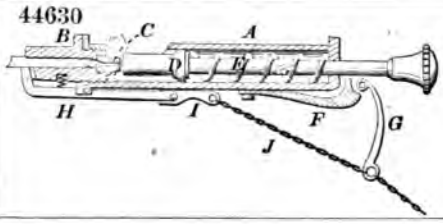

44627

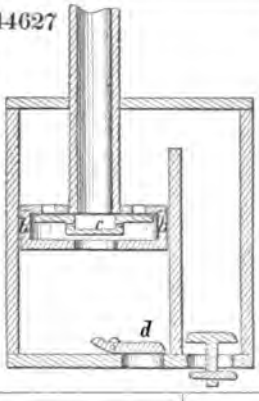

44632

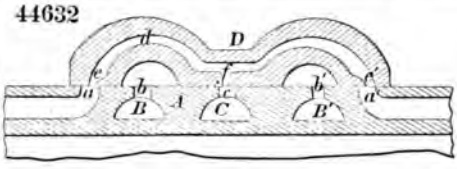

44631

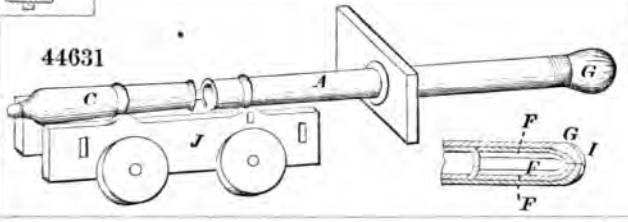

44629

44633

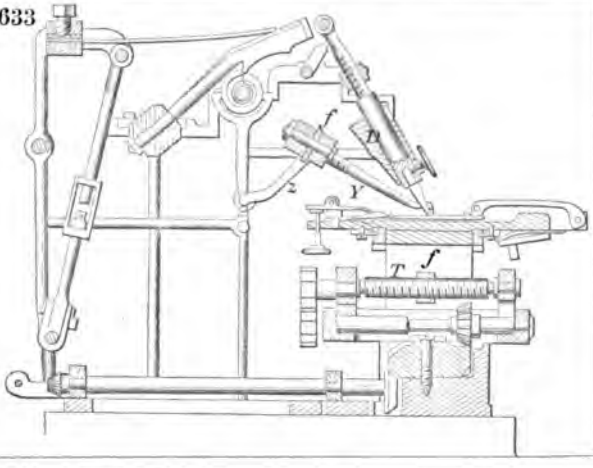

44634

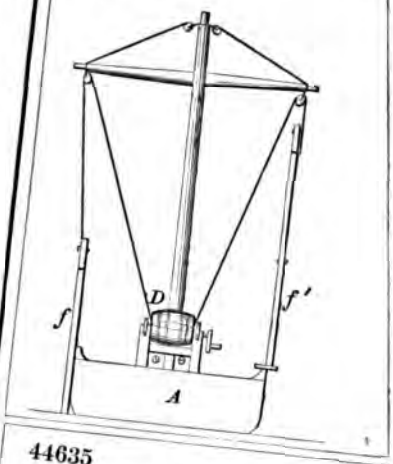

44637

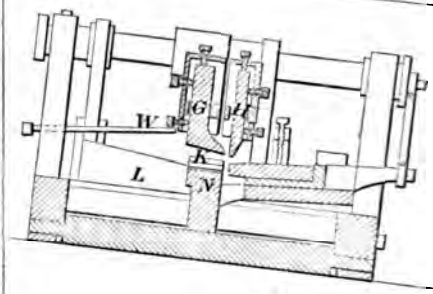

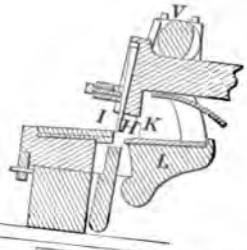

44635

44636

44640

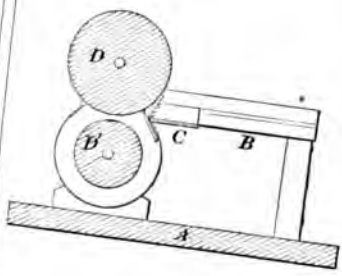

44638

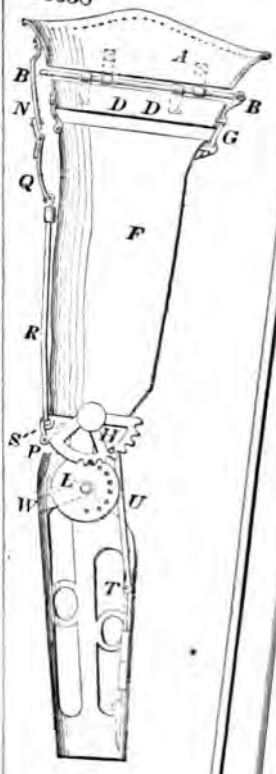

44639

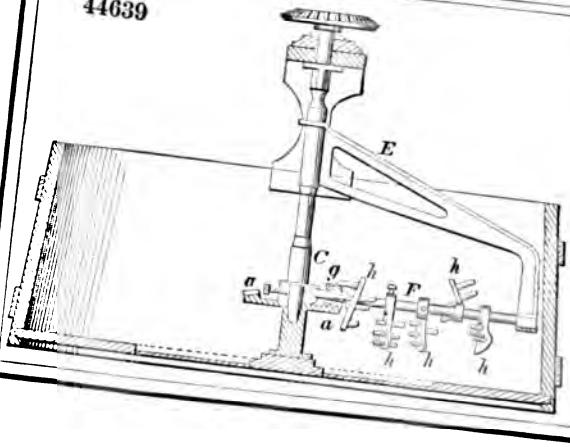

44641

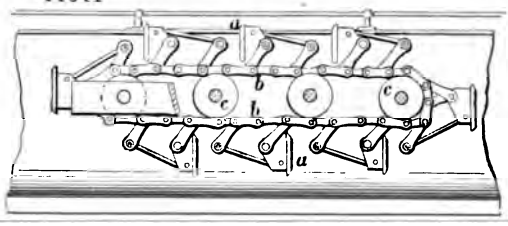

44644

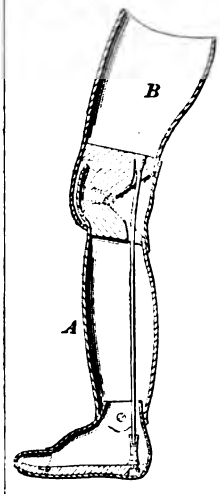

44643

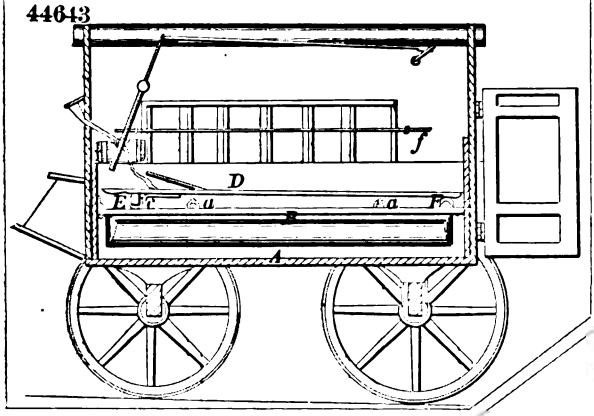

44647

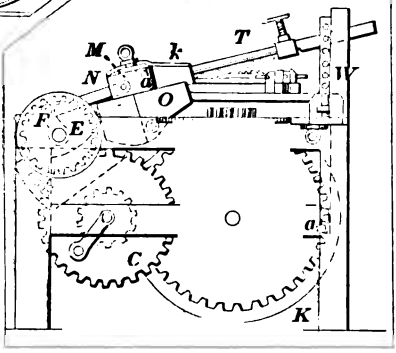

44645

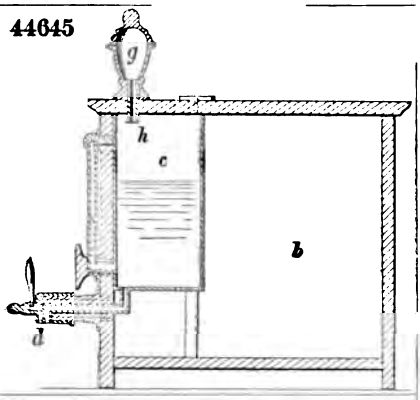

44648

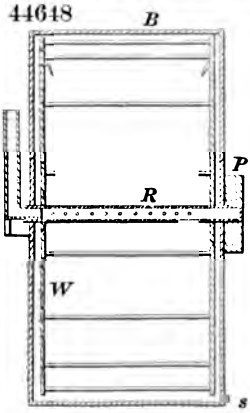

44642

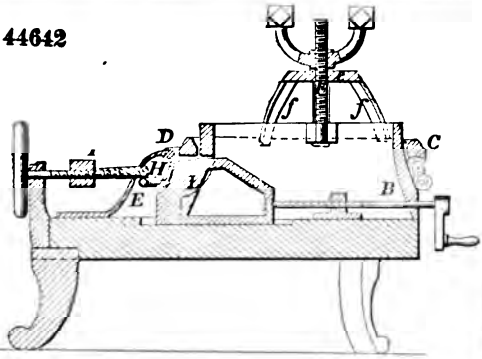

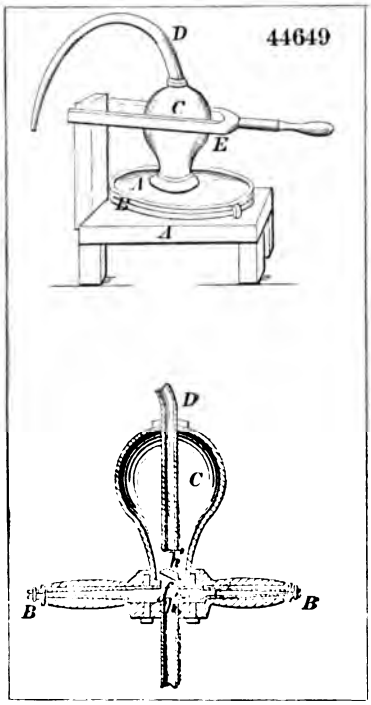
44649
D
C
E
A
B
A
D
C
h
B
B

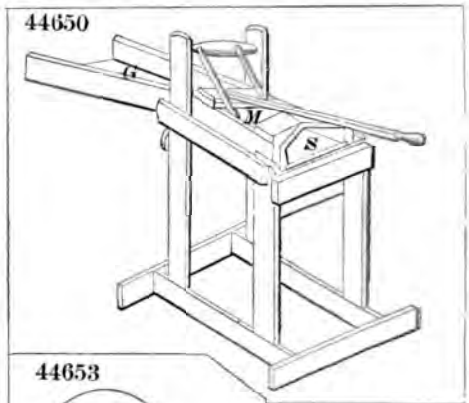
44650
G
M
S

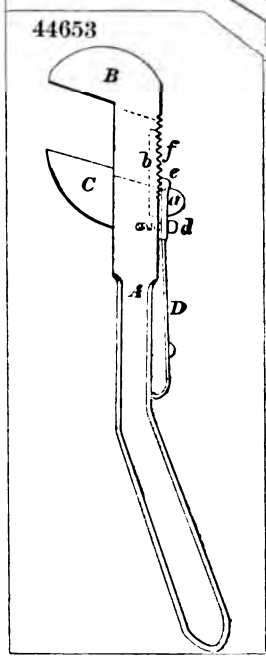
44653
B
f
b
e
C
d
a
d
A
D

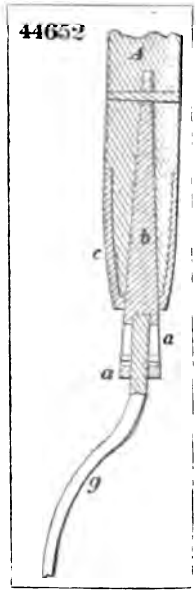
44652
A
b
c
a
a
g

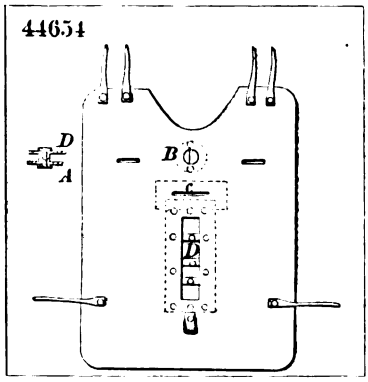
44654
D
A
B
c
D

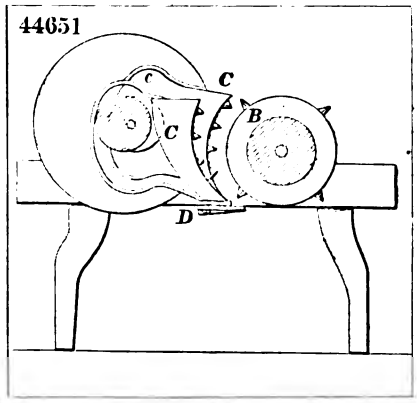
44651
c
C
C
B
D

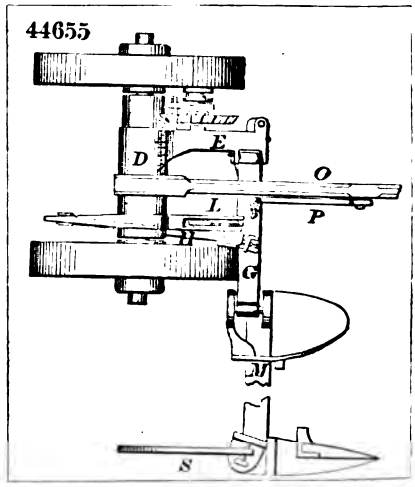
44655
E
D
O
L
P
H
G
M
S

44656

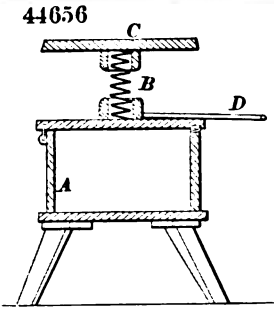

44658

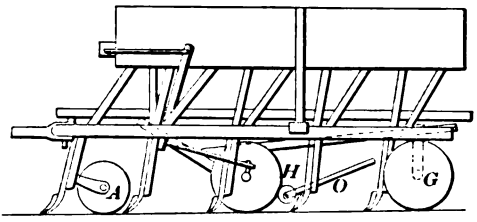

44657

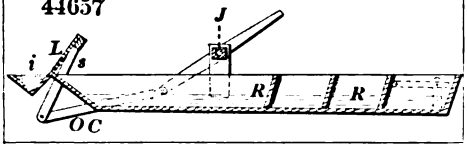

44659

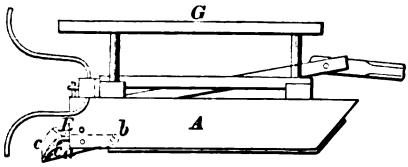

44660

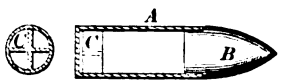

44661

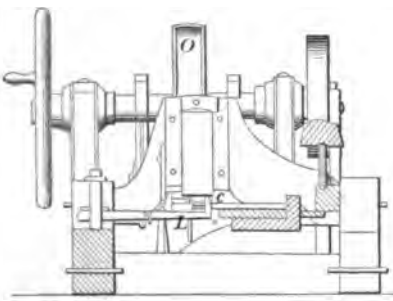

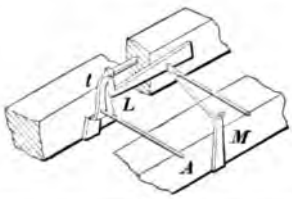

44662

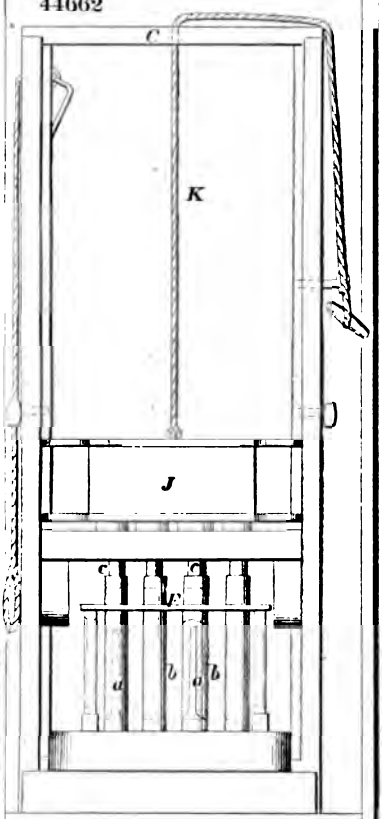

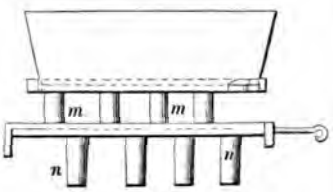

44663

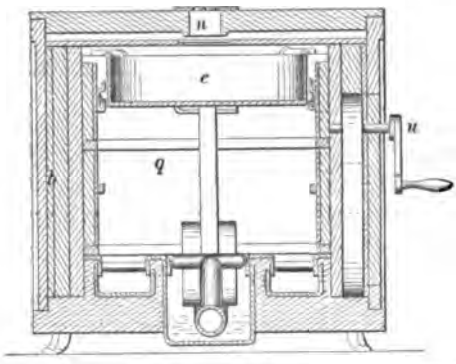

44664

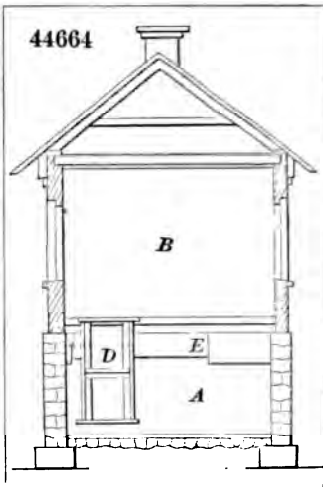

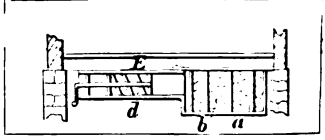

44665

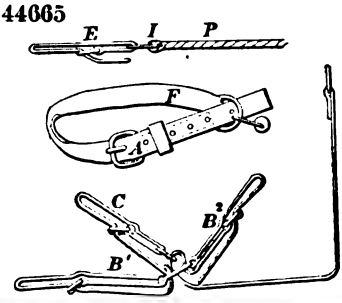

44666

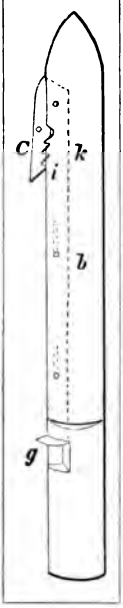

44670

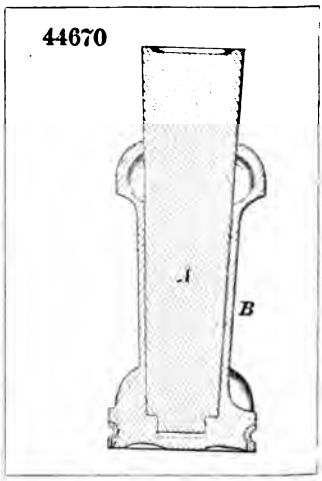

44667

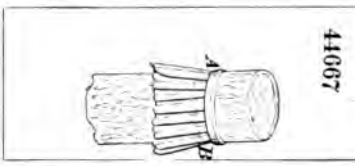

44668

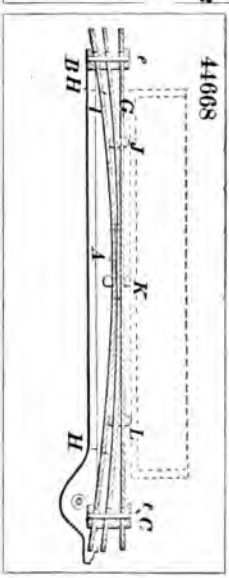

44669

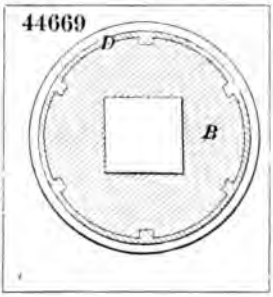

44671

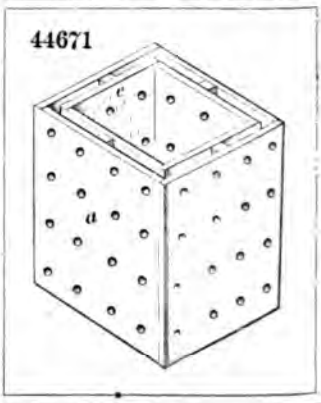

44673

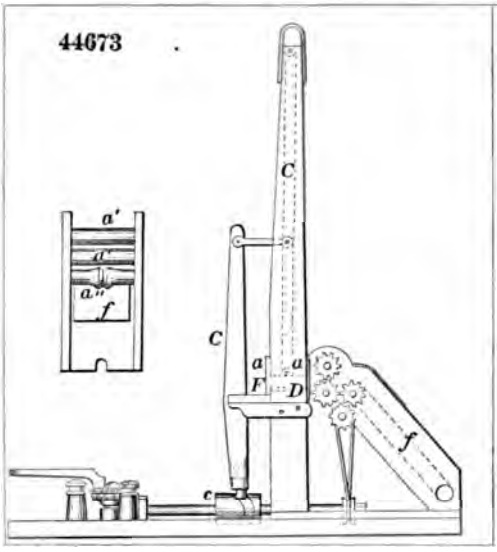

44675

44676

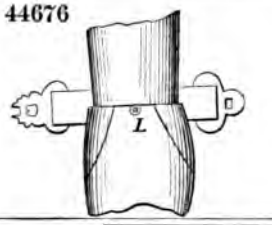

44674

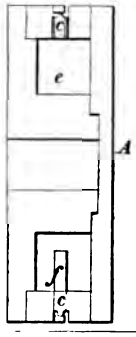

44677

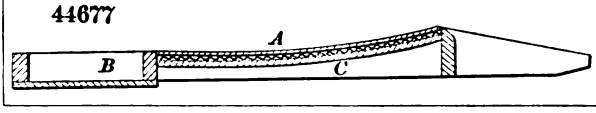

44678

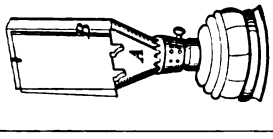

44680

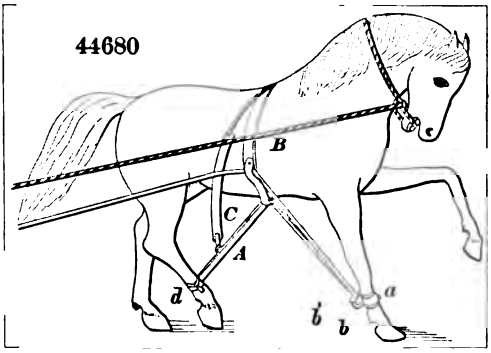

44679

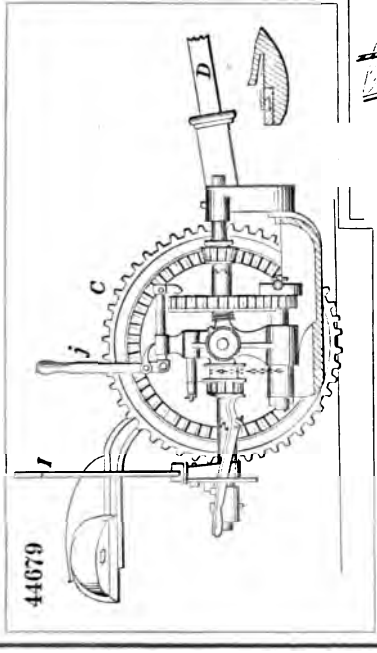

44681

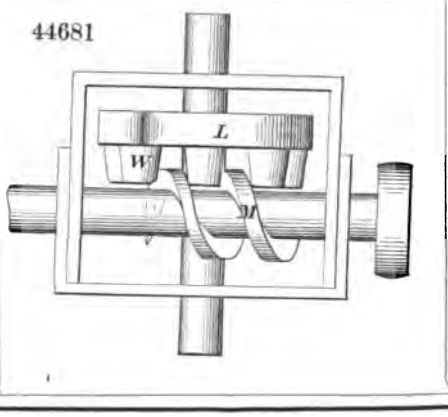

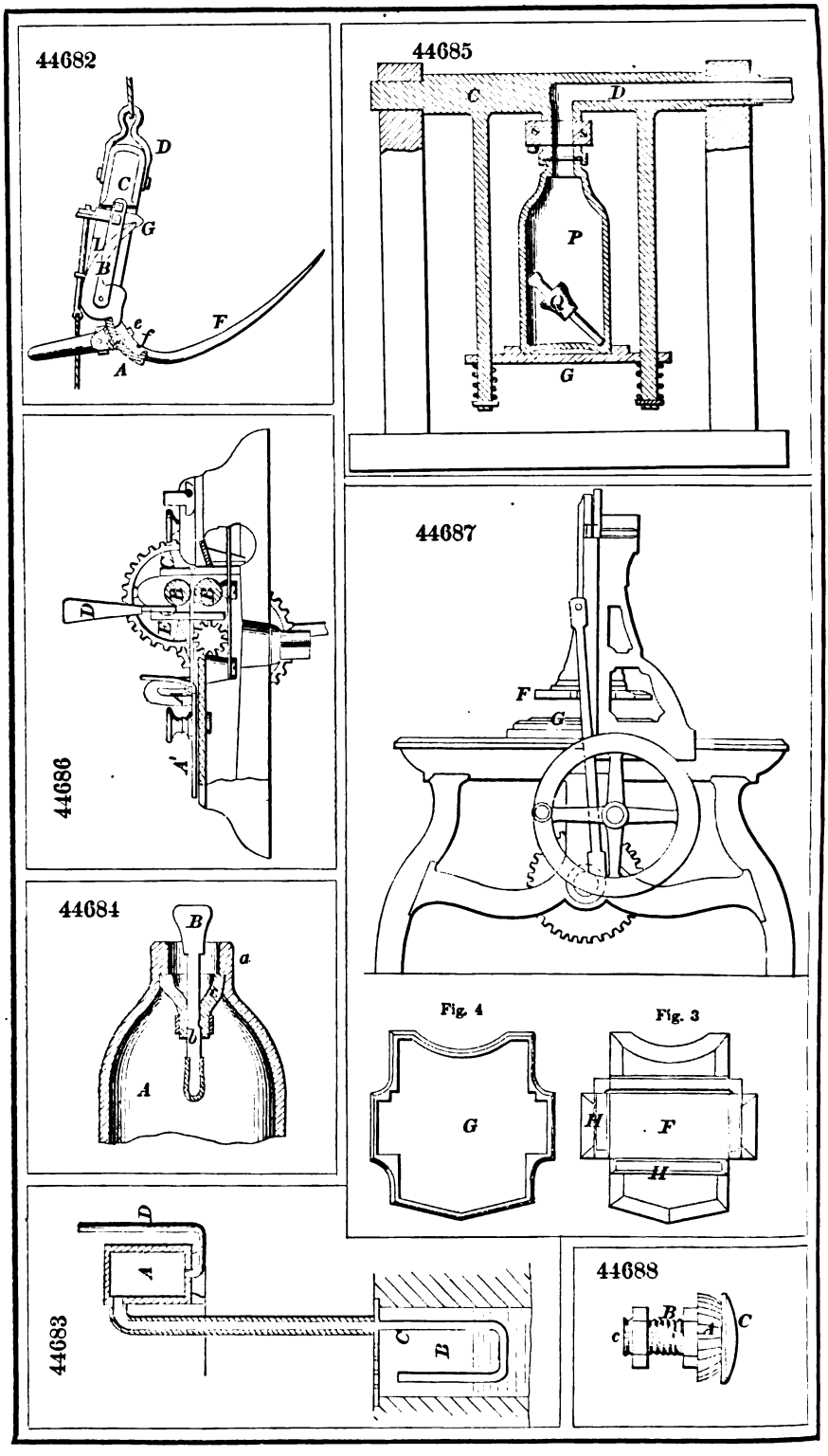
44682
D
C
G
L
B
e
f
F
A
44685
C
D
P
Q
G
44686
D
E
B
B
A'
44687
F
G
44684
B
a
A
Fig. 4
G
Fig. 3
H
F
H
44683
D
A
C
B
44688
B
C
c

44689

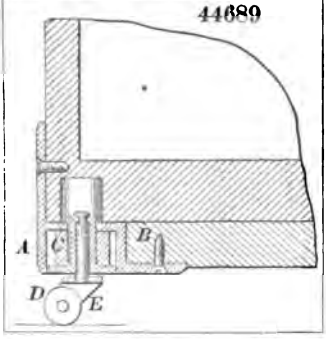

44690

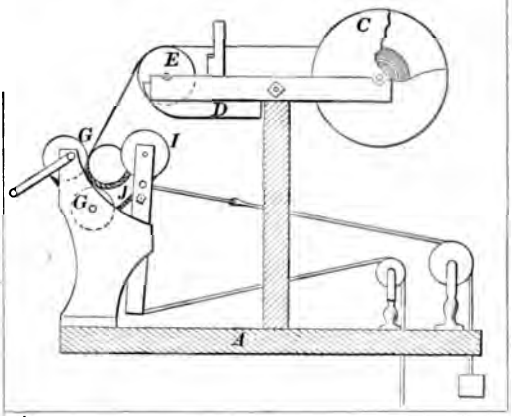

44691

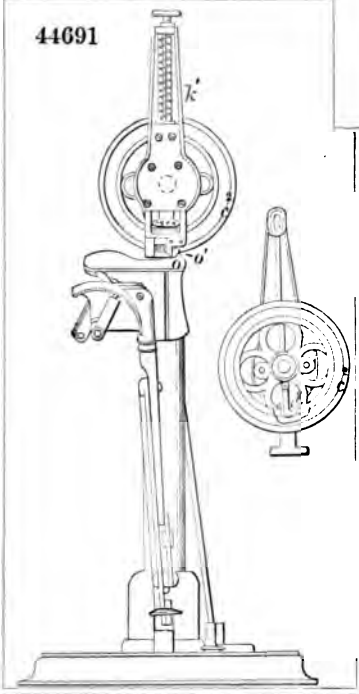

44693

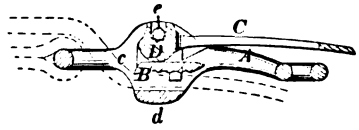

44694

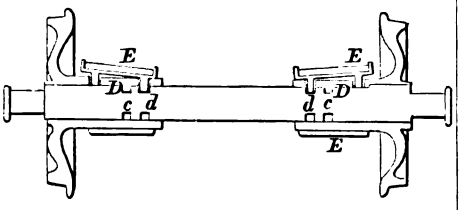

44692

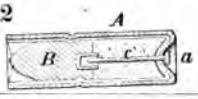

44696

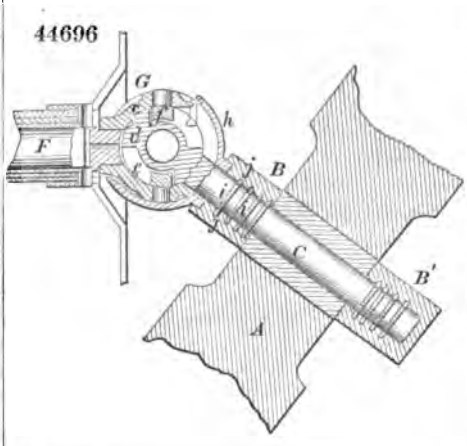

44697

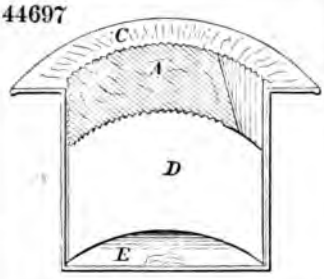

44698

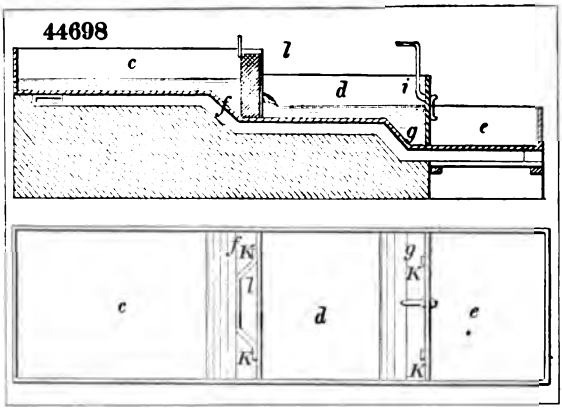

44699

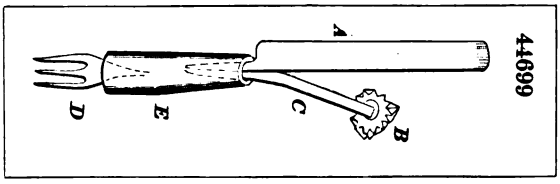

44703

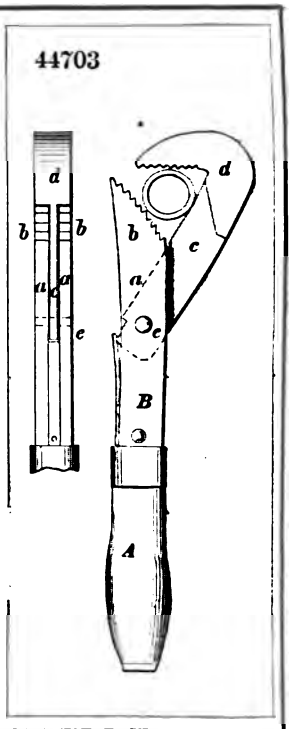

44700

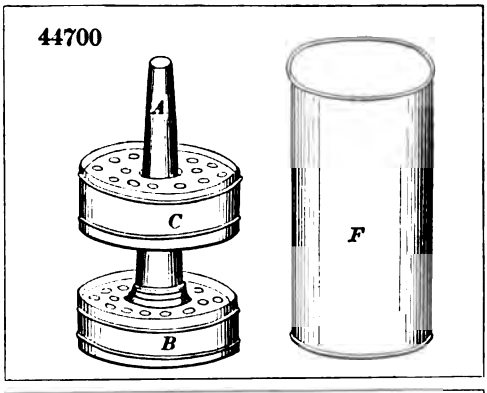

44701

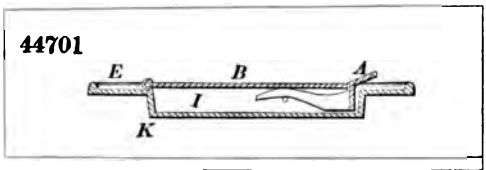

44702

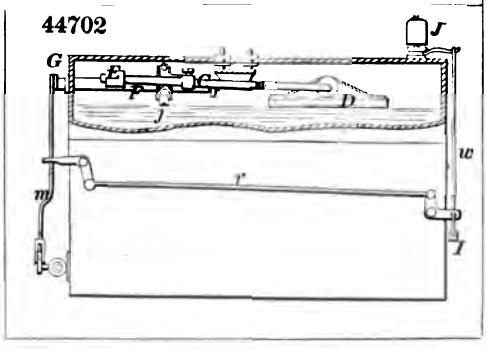

44704

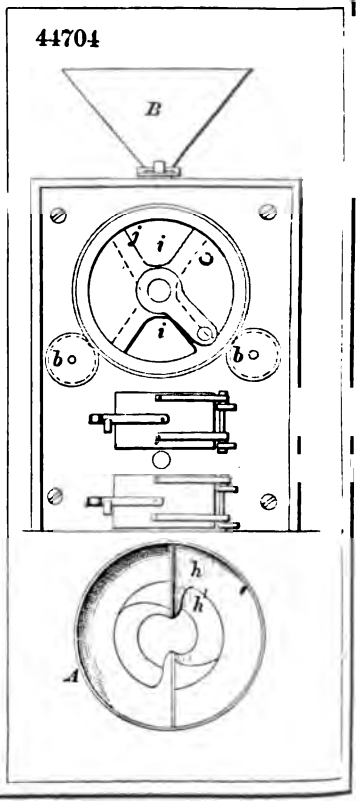

44705

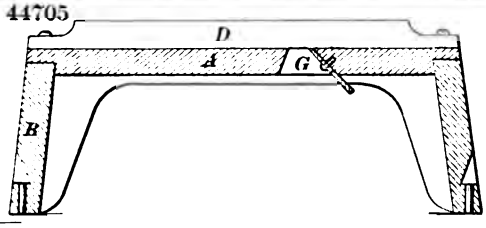

44706

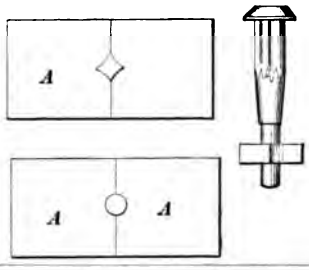

44707

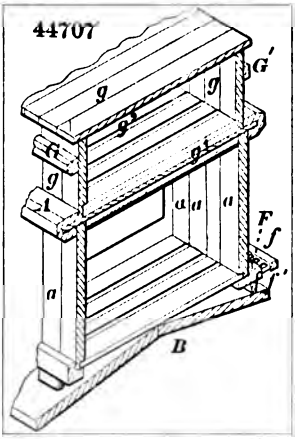

44708

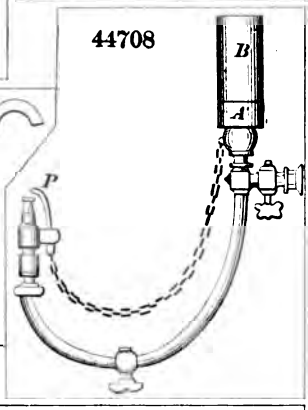

44710

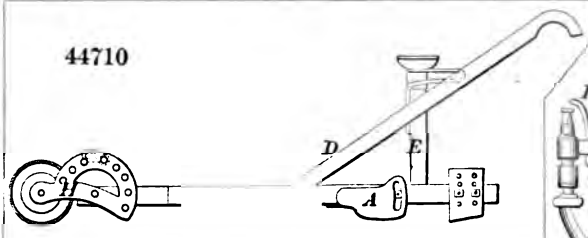

44709

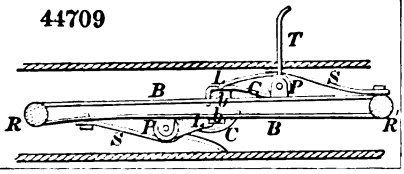

44711

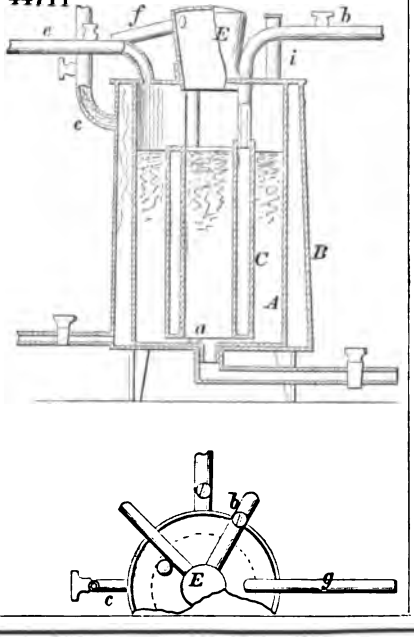

44712

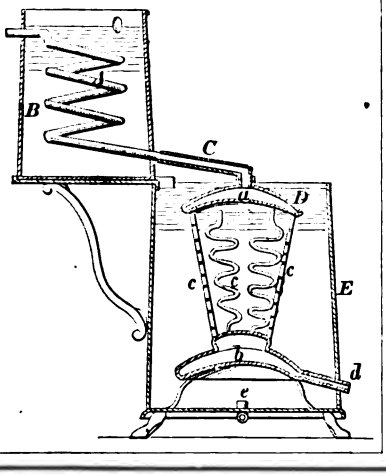

44713

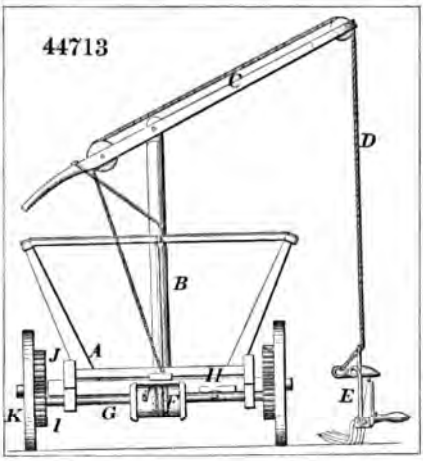

44717

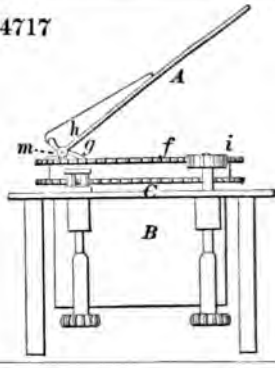

44715

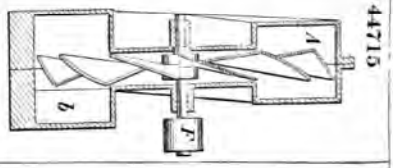

44716

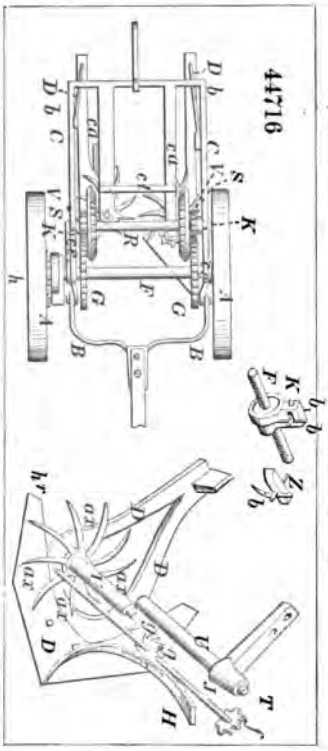

44718

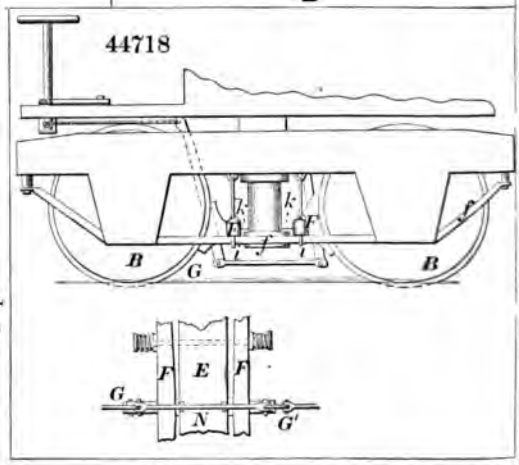

44719

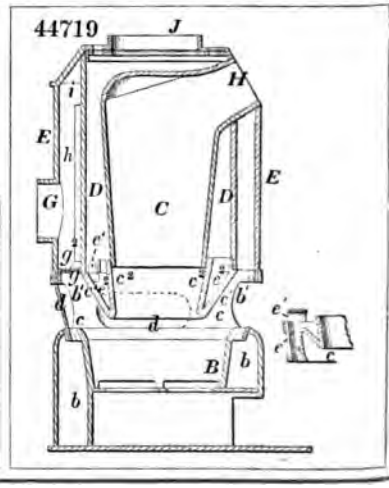

44714

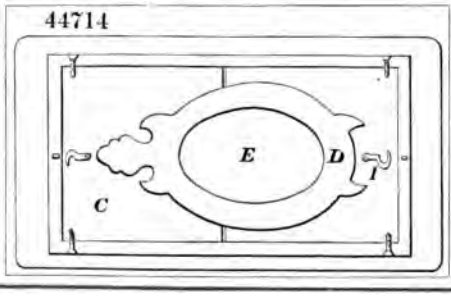

44720

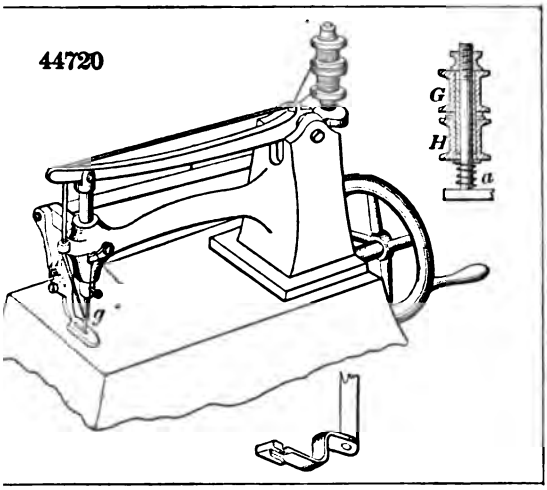

44721

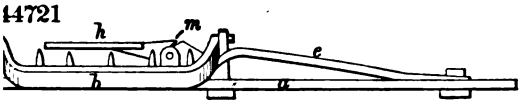

44723

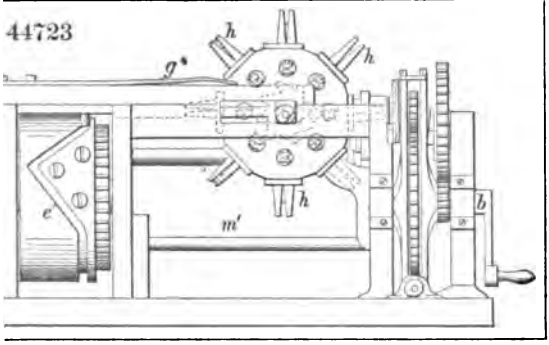

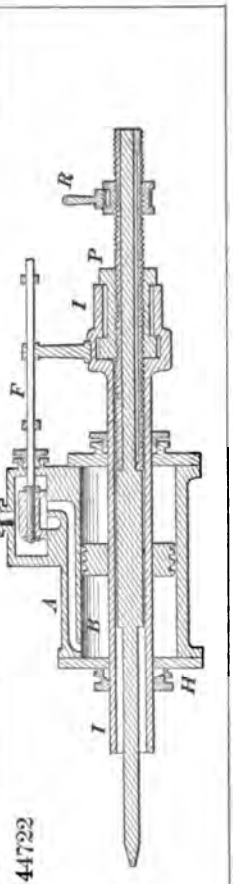

44722

44724

44725

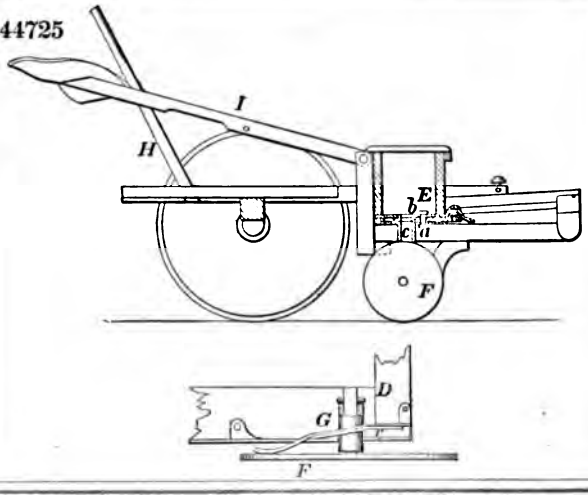

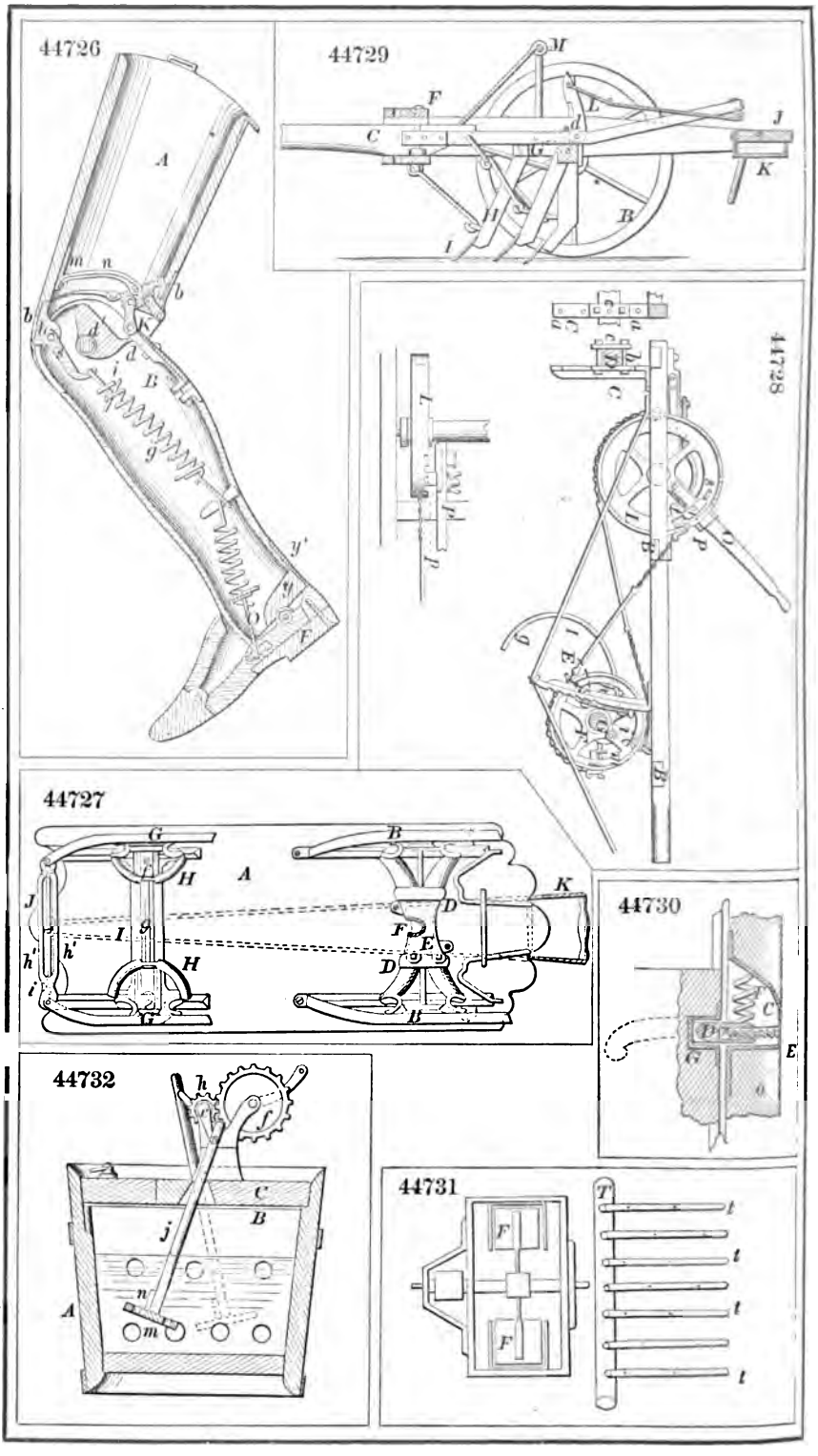
44726
44729
44728
44727
44730
44732
44731

44733

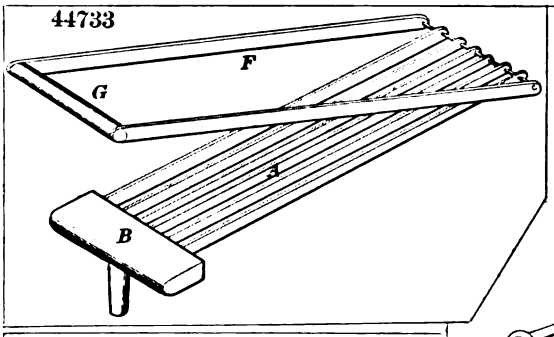

44740

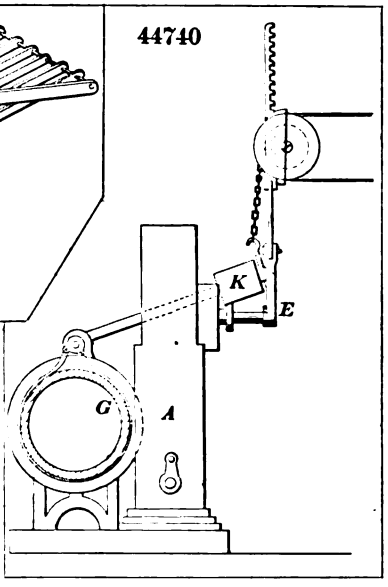

44734

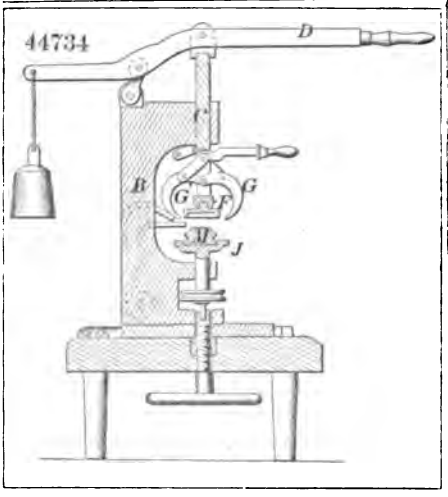

44737

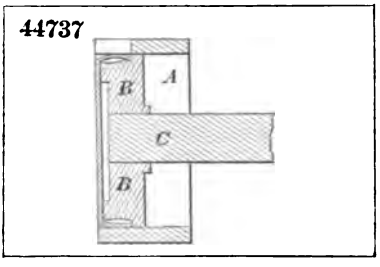

44738

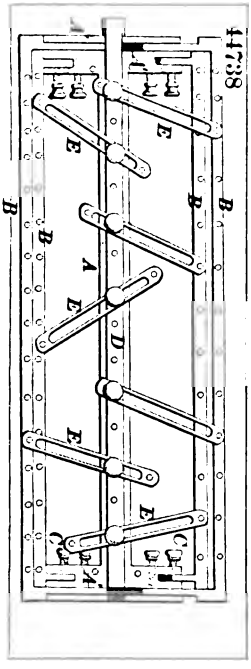

44736

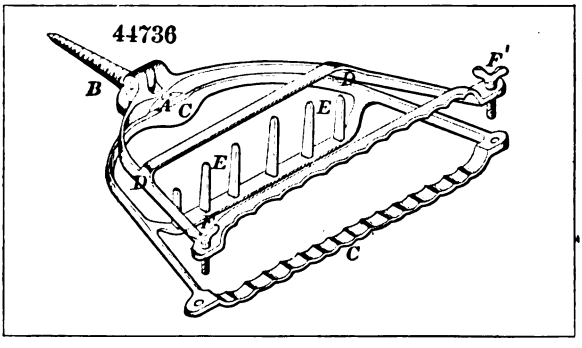

44741

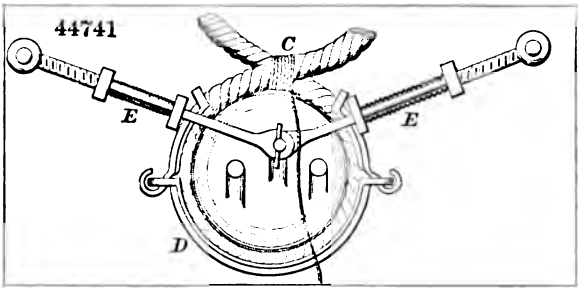

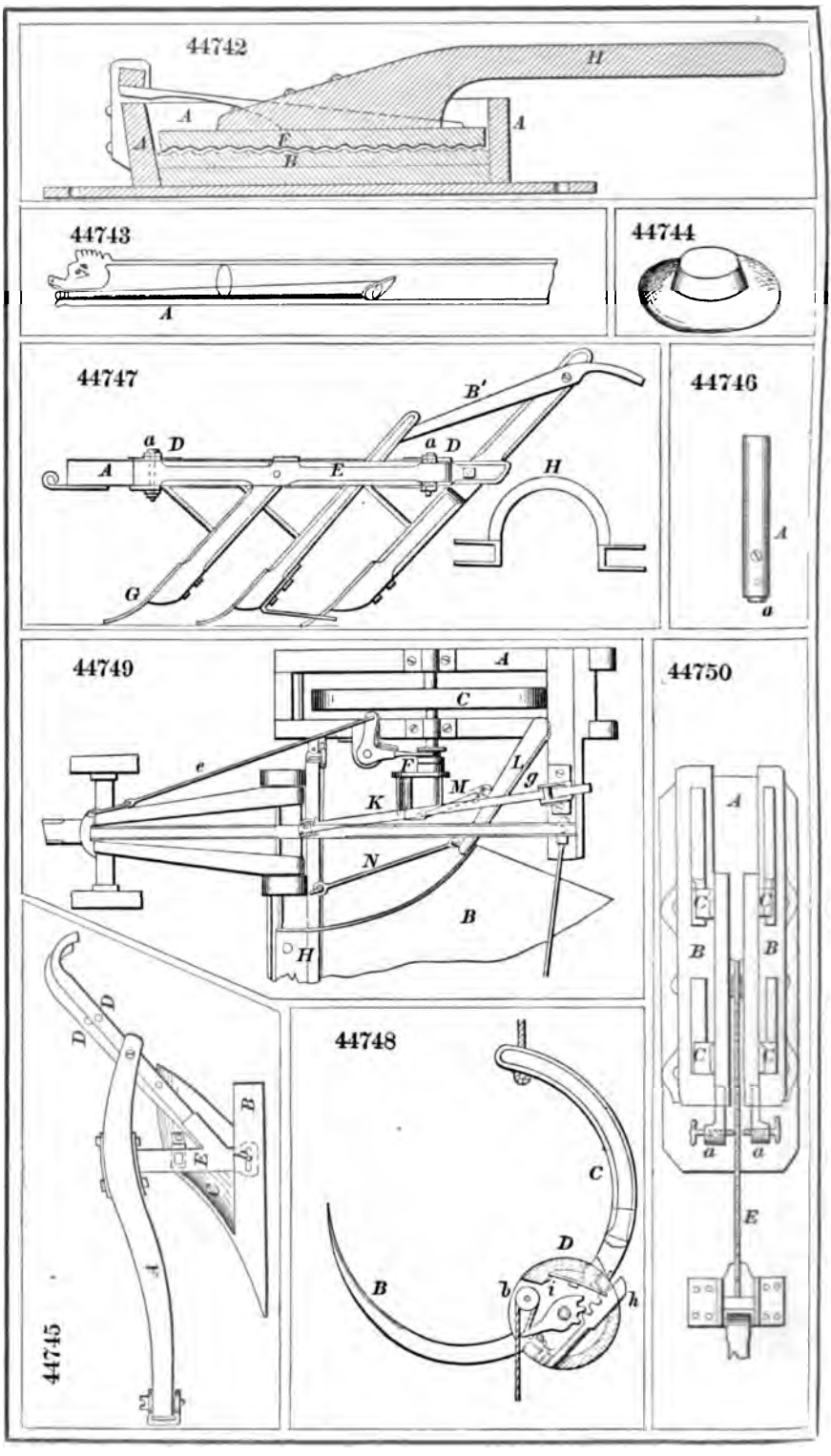
44742
H
A
A
A
F
B
44743
A
44744
44747
B'
a D
a D
A
E
H
G
44746
A
a
44749
A
C
e
F
L
g
M
K
N
B
H
44750
A
C
C
B
B
C
C
a
a
E
44745
D
D
e
B
E
F
44748
C
D
B
b
i
h

44751

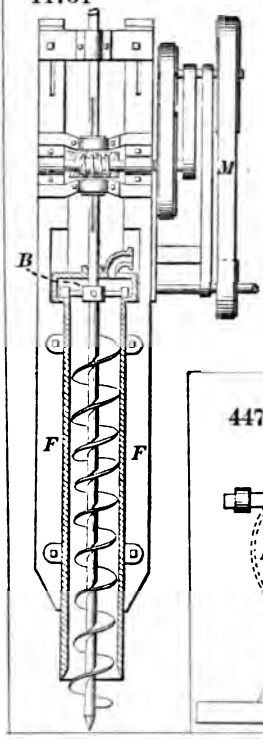

44753

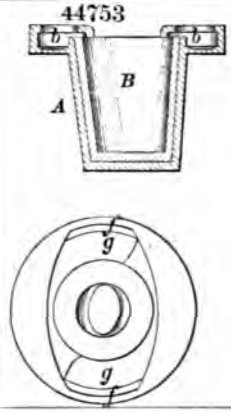

44752

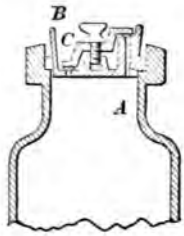

44755

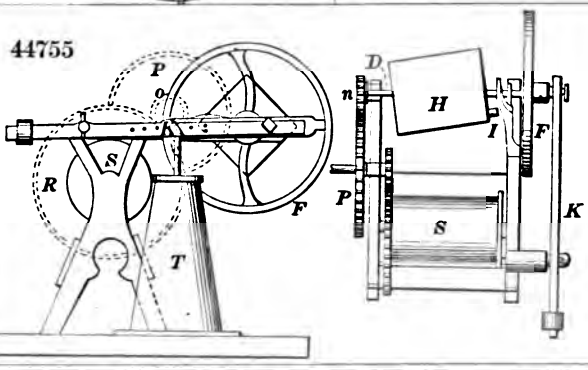

44754

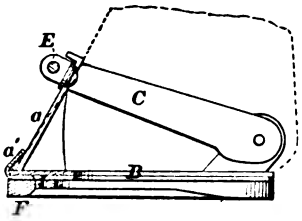

44756

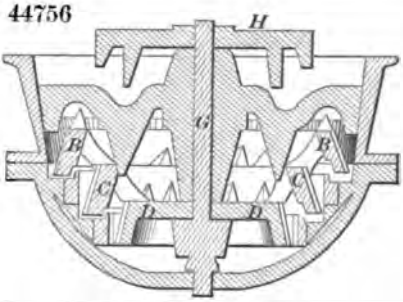

44759

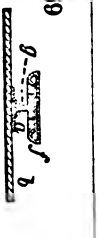

44757

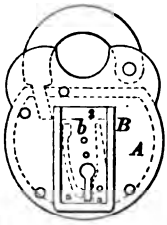

44758

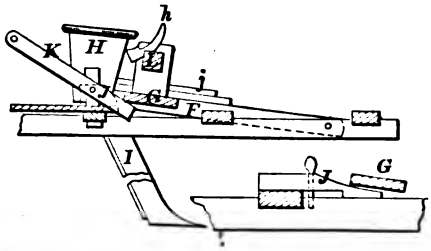

44760

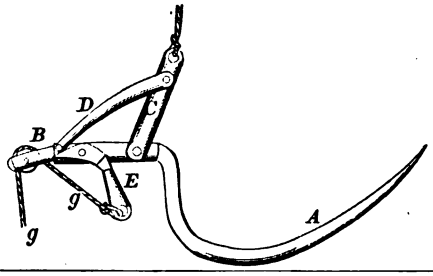

44764

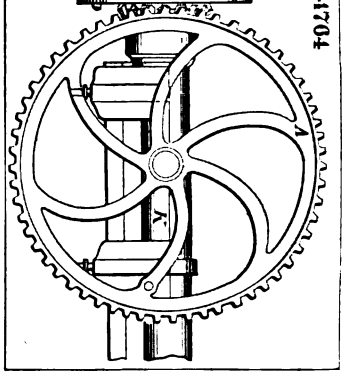

44761

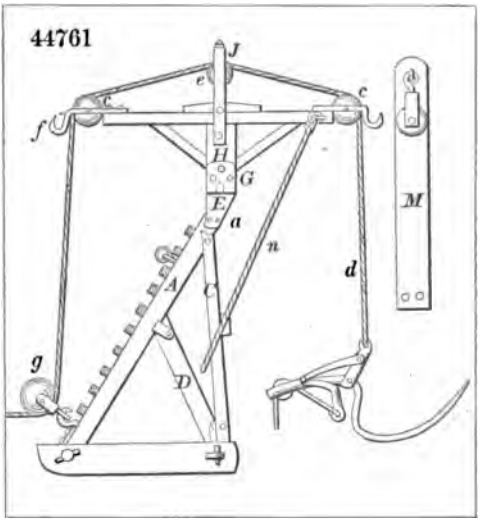

44763

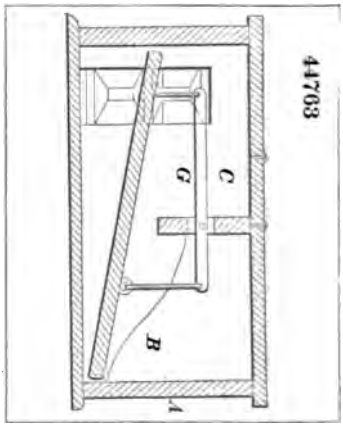

44765

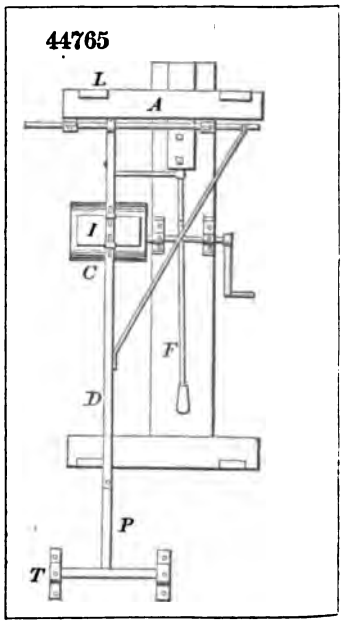

44762

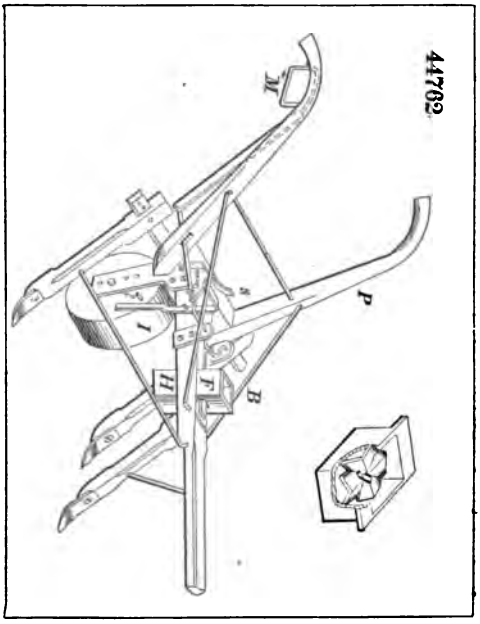

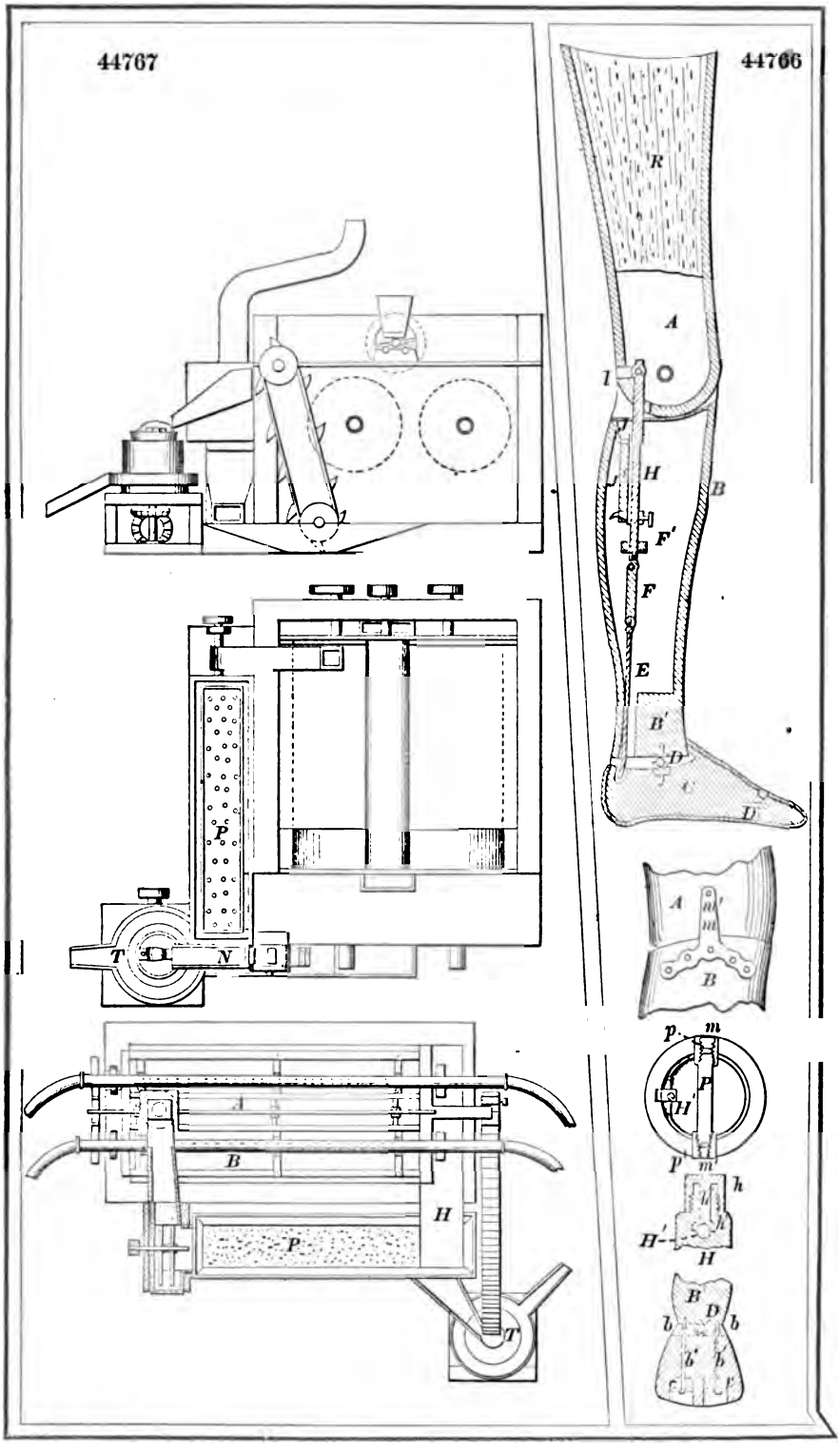
44767
44766
R
A
l
H
B
F'
F
E
B'
D
C
D
P
T
N
A
m'
m
B
p
m
P
H'
p
m
h
H'
H
B
D
b
b
b'
b
b'

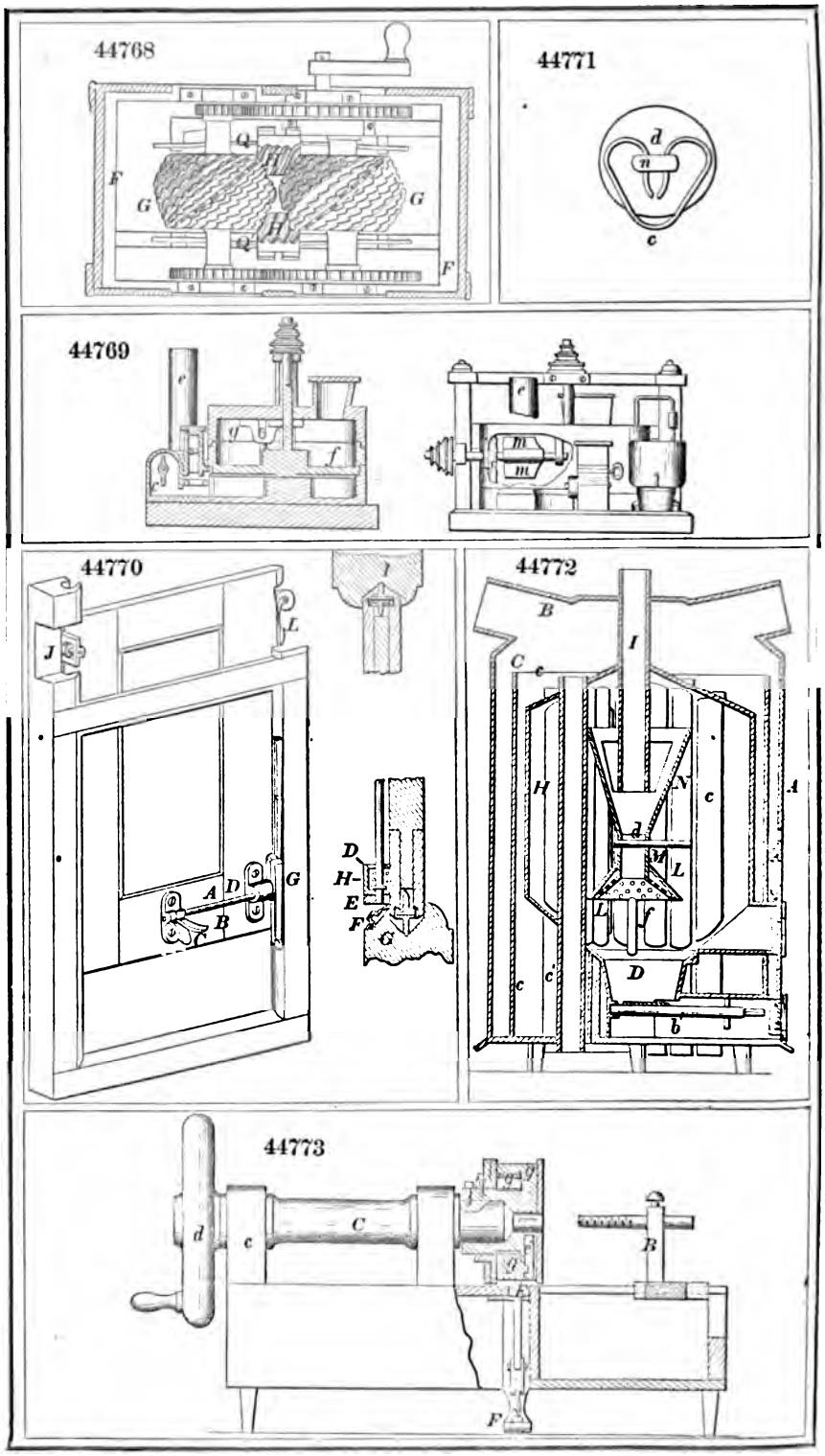
44768
44771
44769
44770
44772
44773

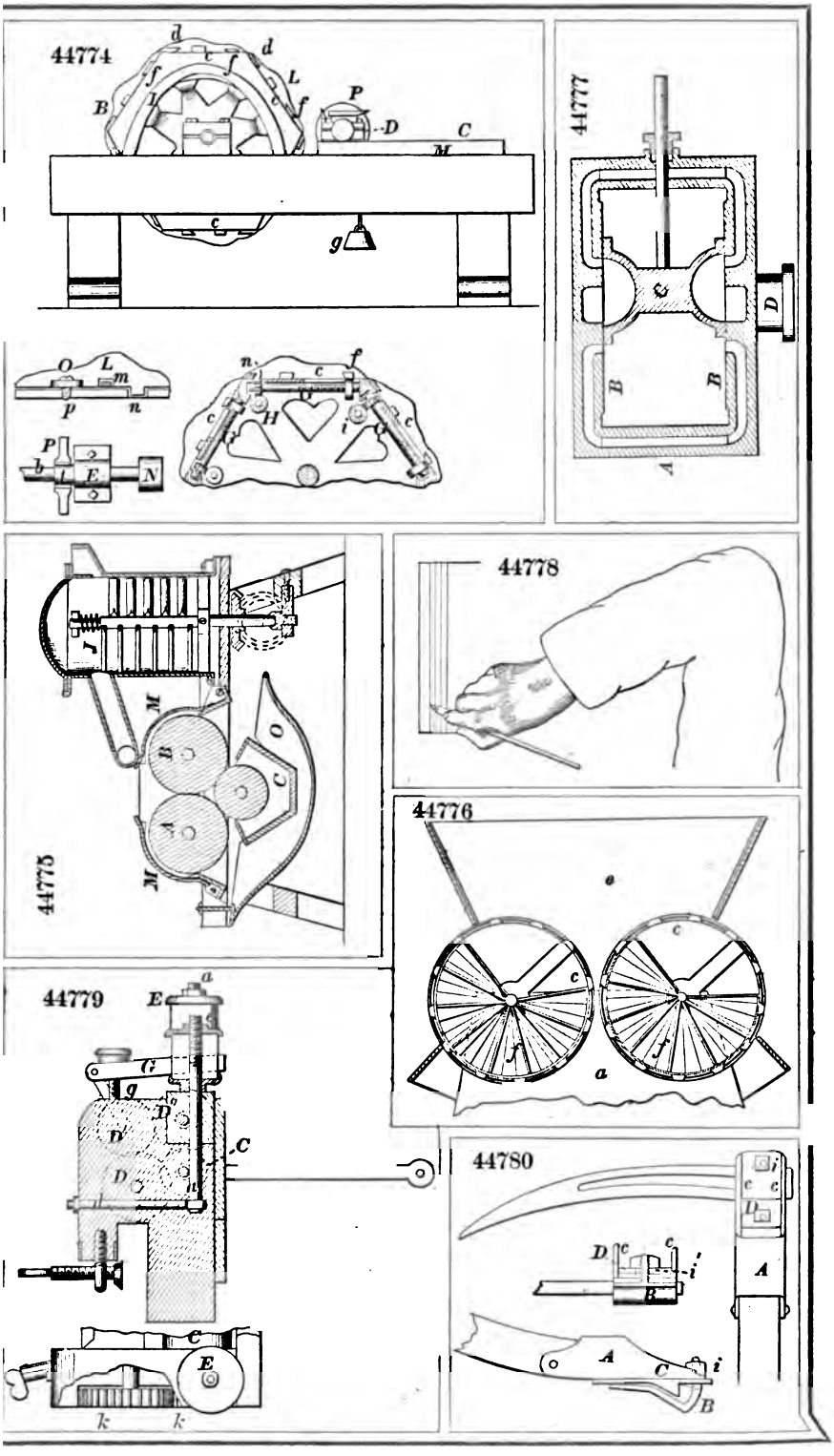
44774
44777
44775
44778
44776
44779
44780

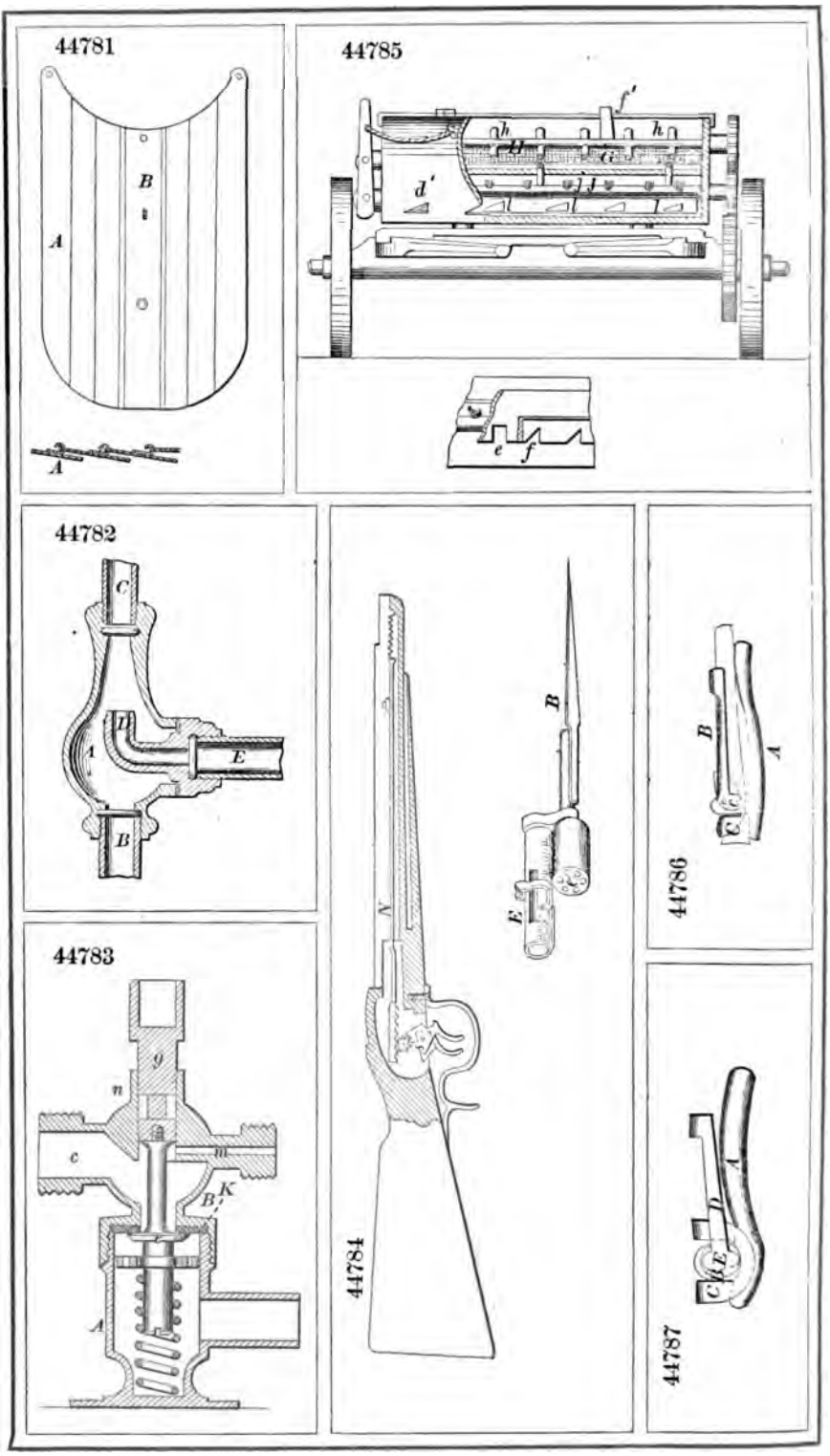
44781
44785
44782
44783
44784
44786
44787

44788

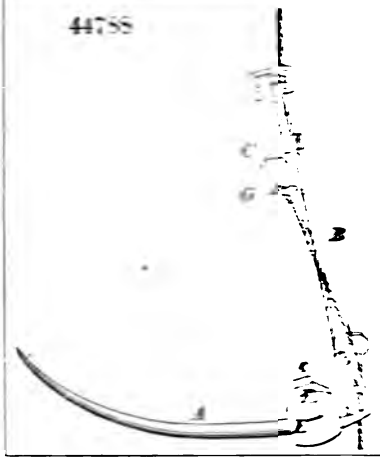

44790

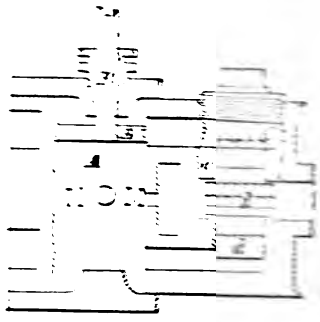

44789

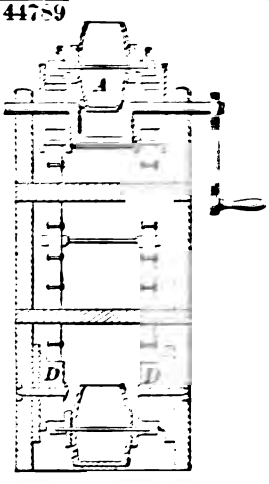

44791

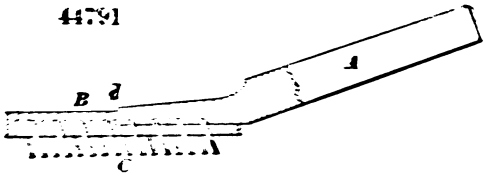

44793

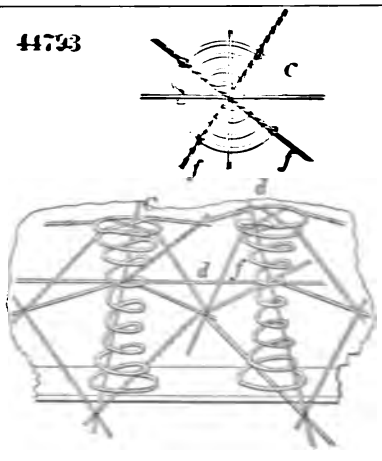

44792

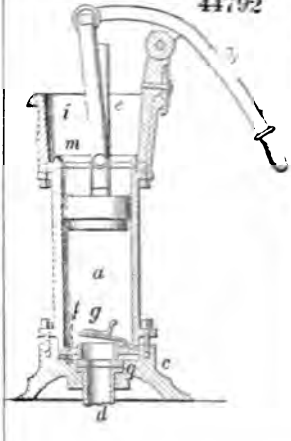

44794

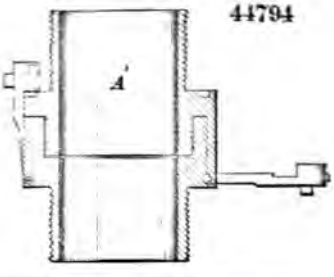

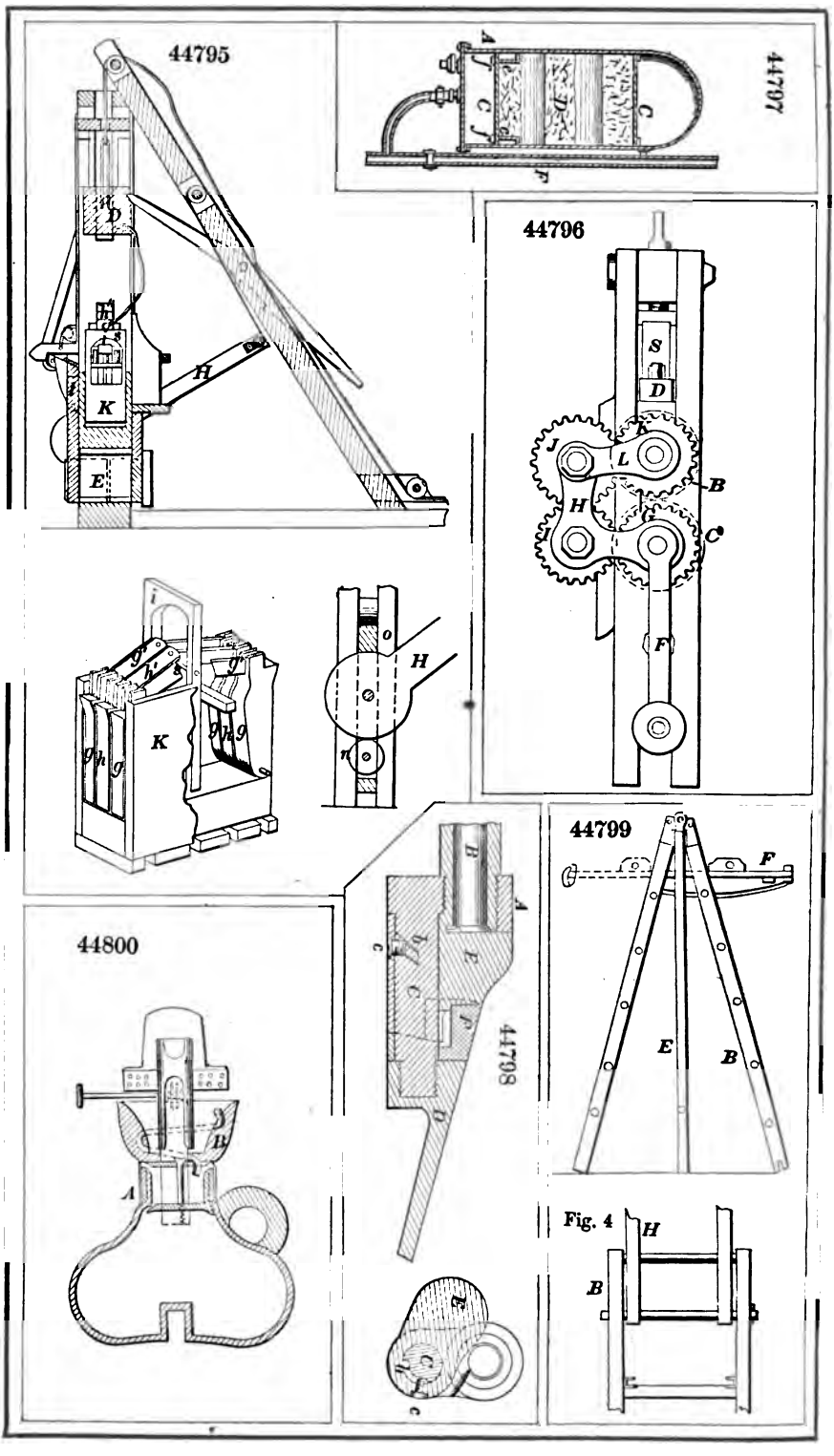
44795
44797
44796
44800
44798
44799
Fig. 4

44801

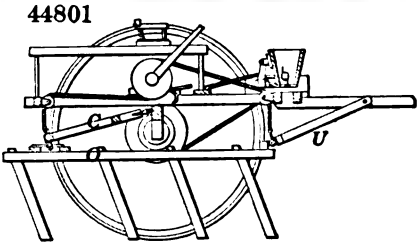

44804

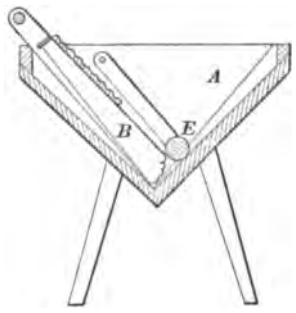

44803

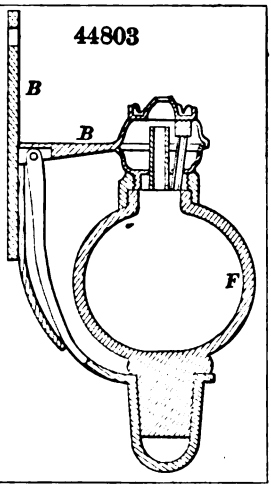

44805

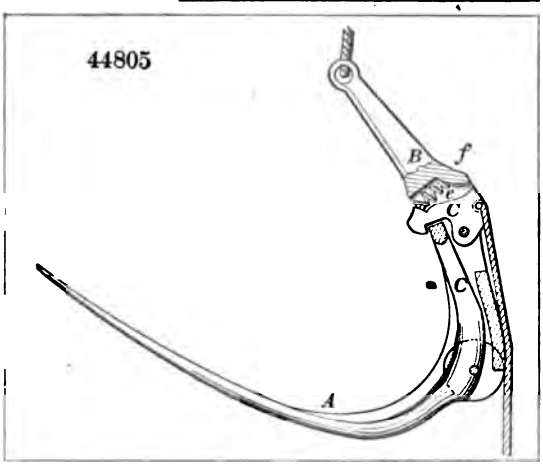

44802

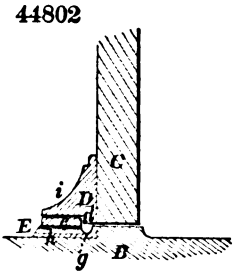

44806

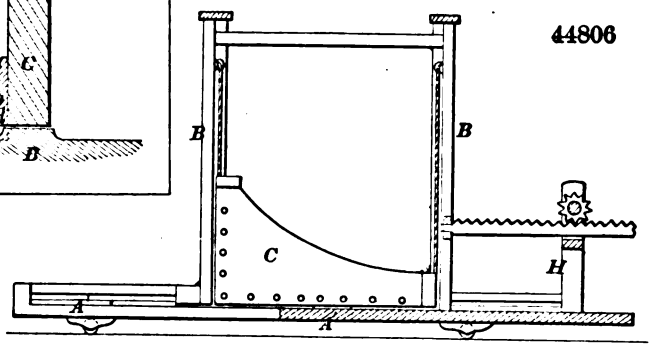

44807

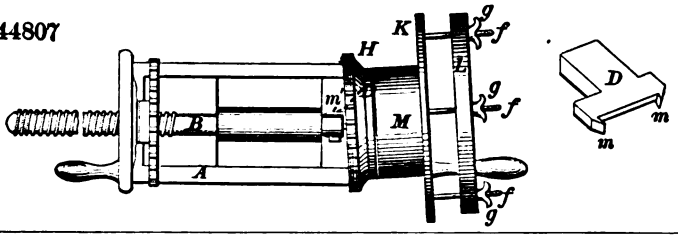

44808

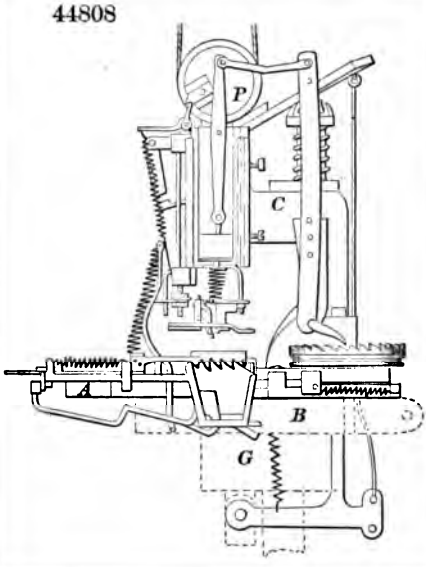

44810

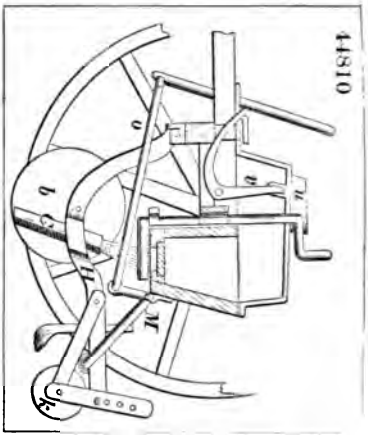

44809

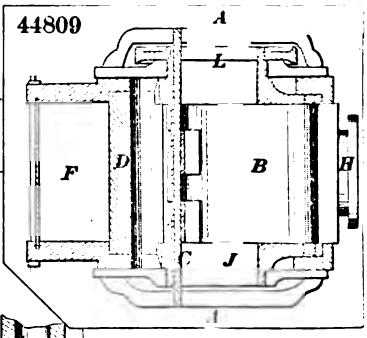

44813

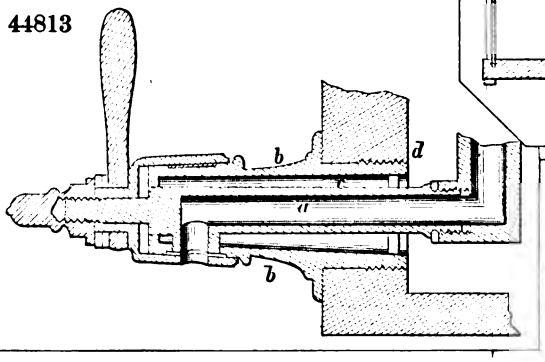

44811

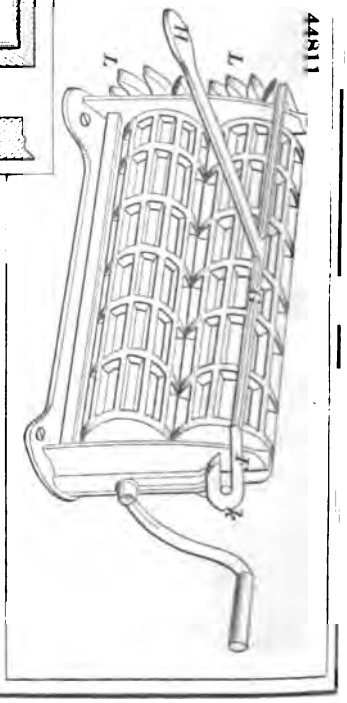

44814

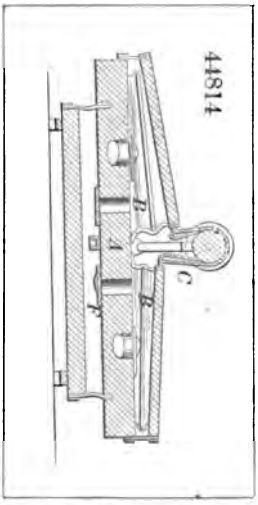

44812

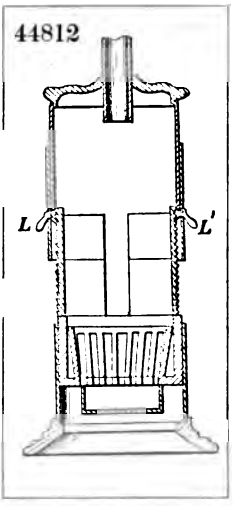

44815

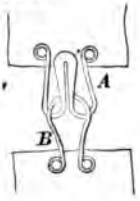

44816

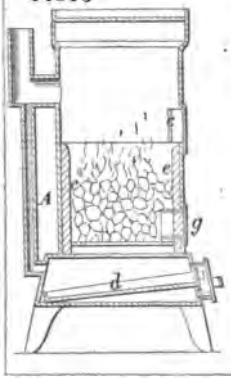

44818

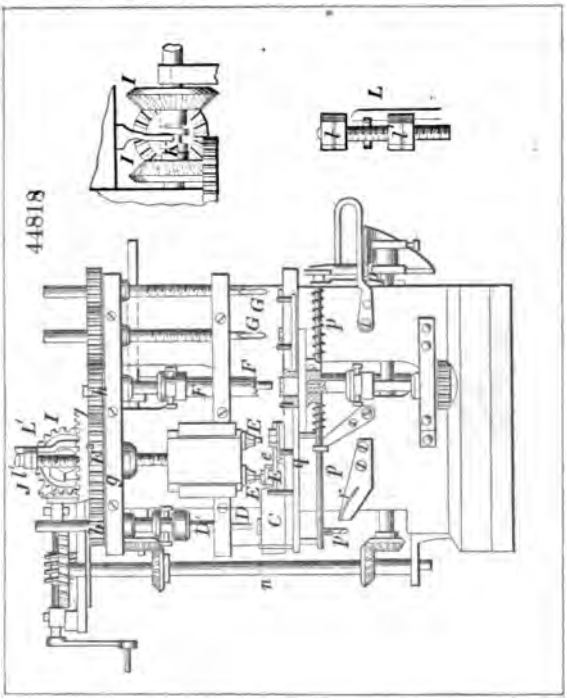

44819

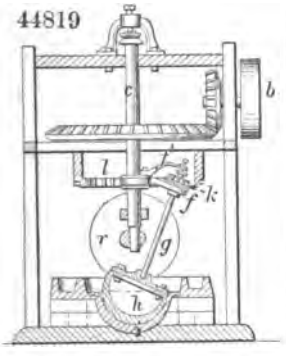

44821

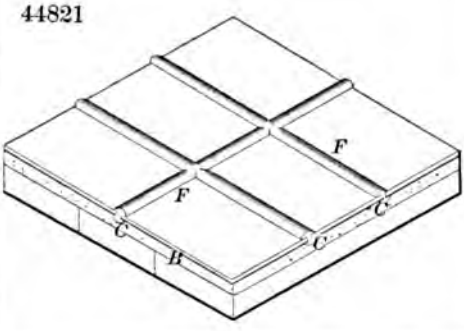

44820

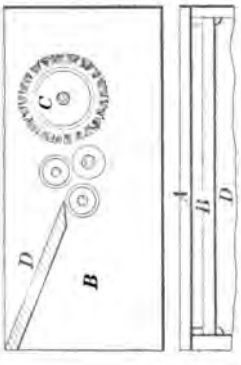

44822

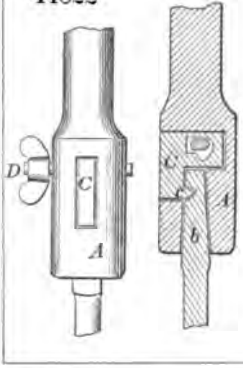

44823

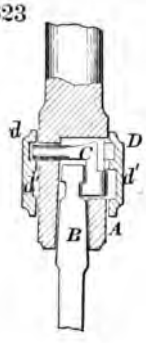

44841

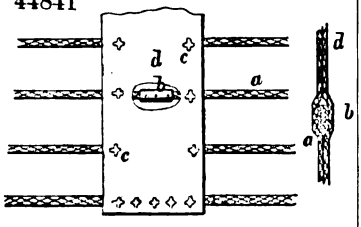

44846

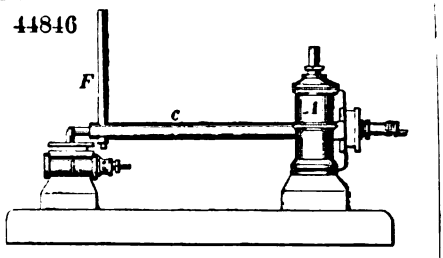

44843

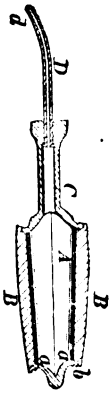

44847

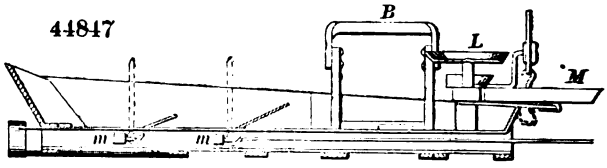

44845

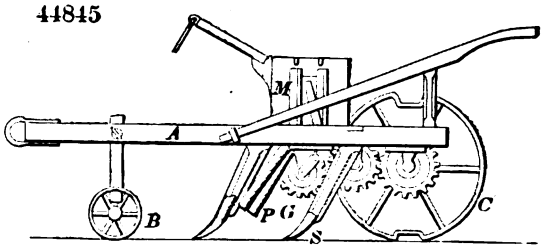

44842

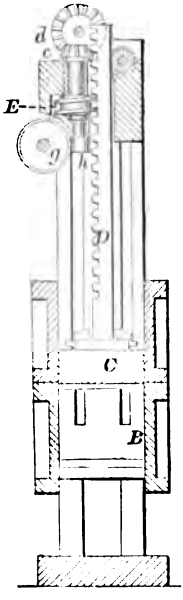

44848

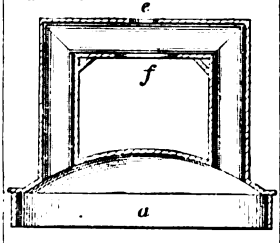

44844

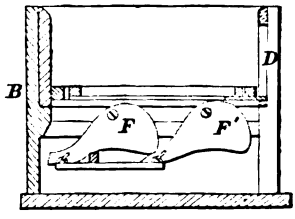

44849

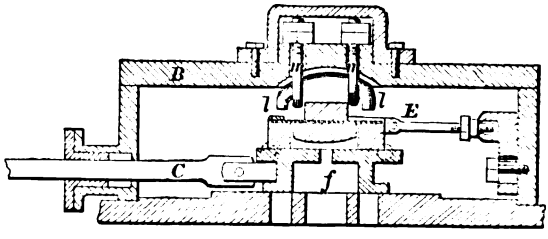

44850

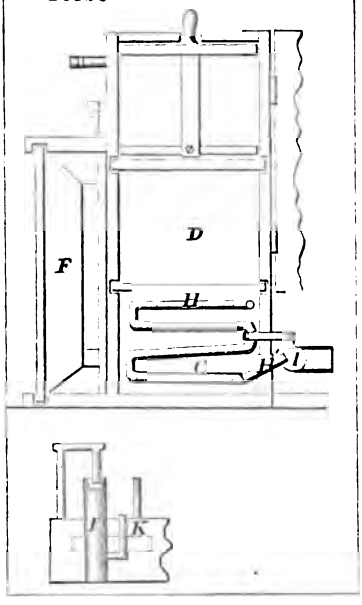

44851

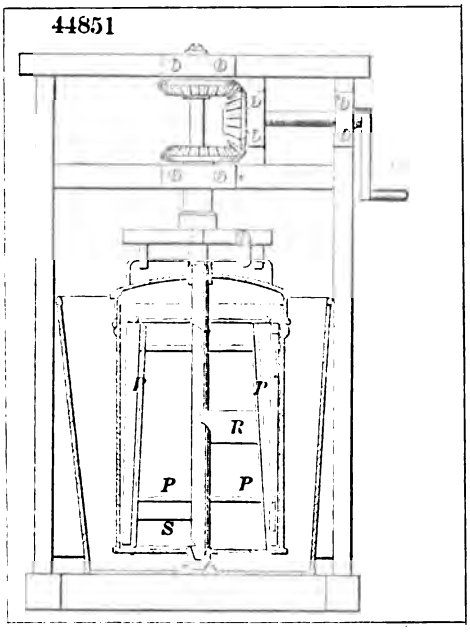

44854

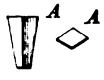

44855

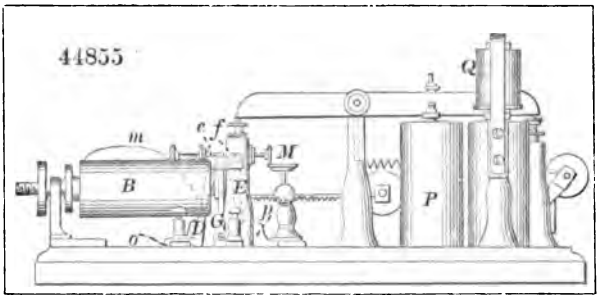

44852

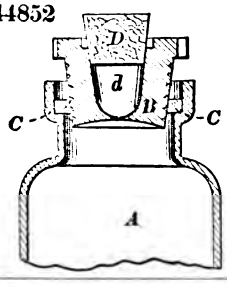

44856

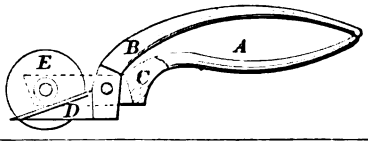

44853

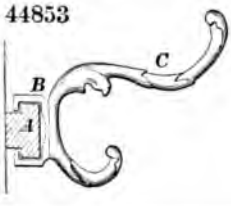

44857

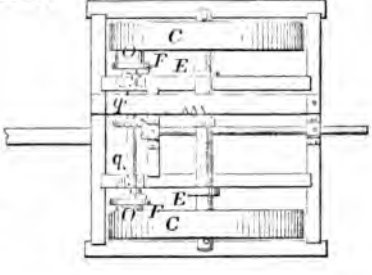

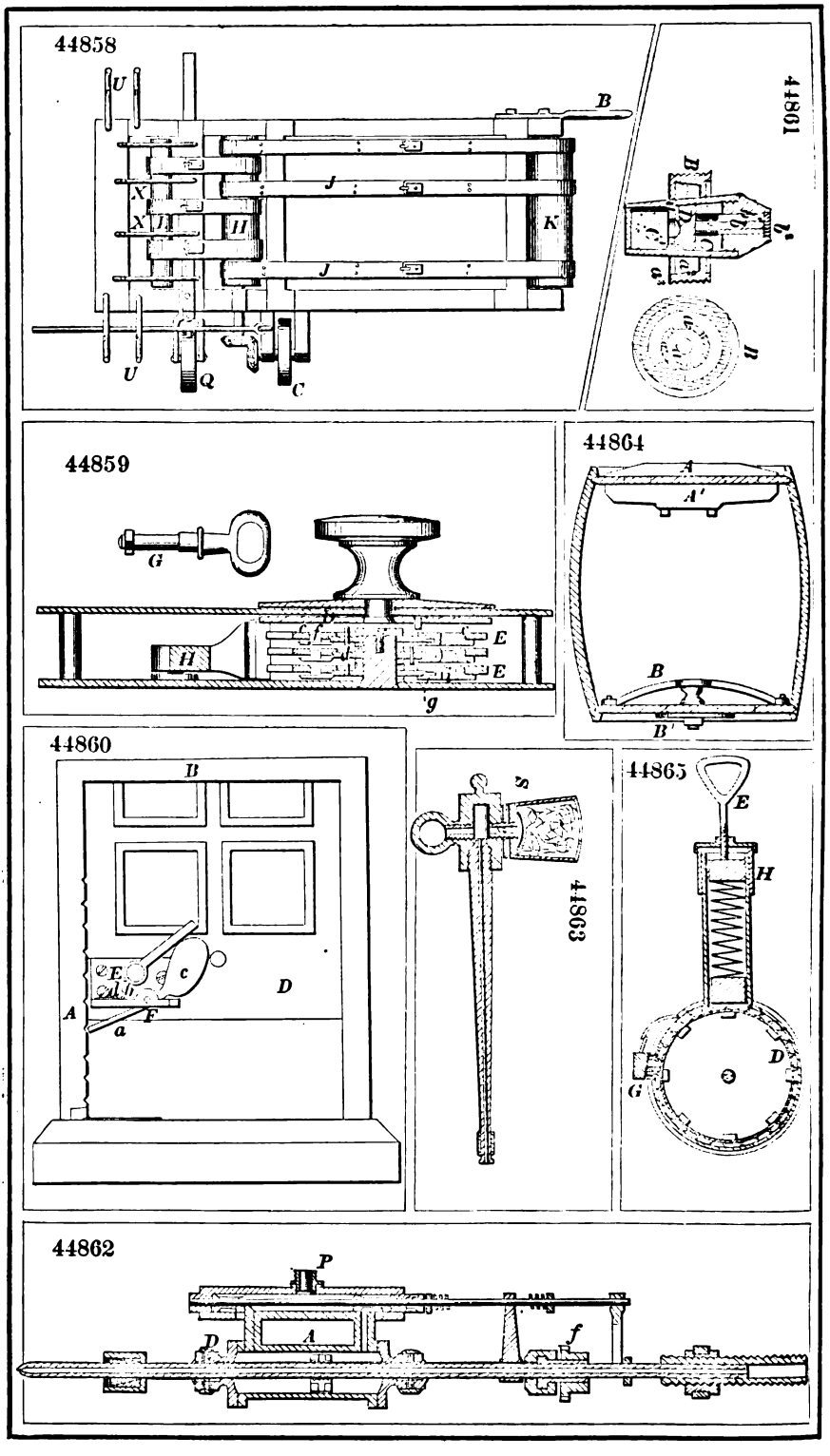
44858
U
B
X
X
J
H
K
J
U
Q
C
44861
44859
G
H
E
E
g
44864
A
A'
B
B'
44860
B
E
c
D
A
F
a
44863
s
44865
E
H
D
G

44862
P
D
A
f

44866

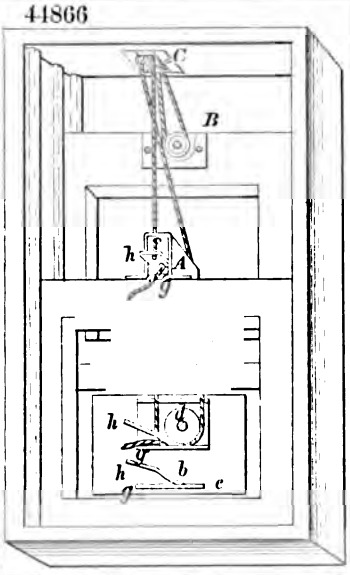

44867

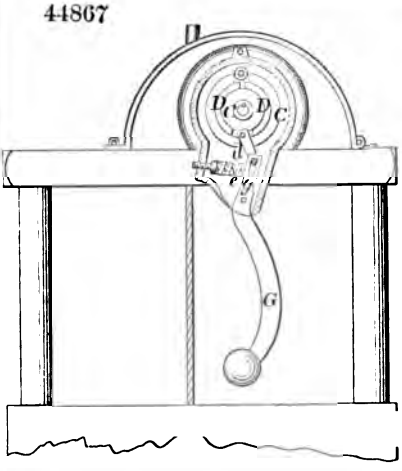

44868

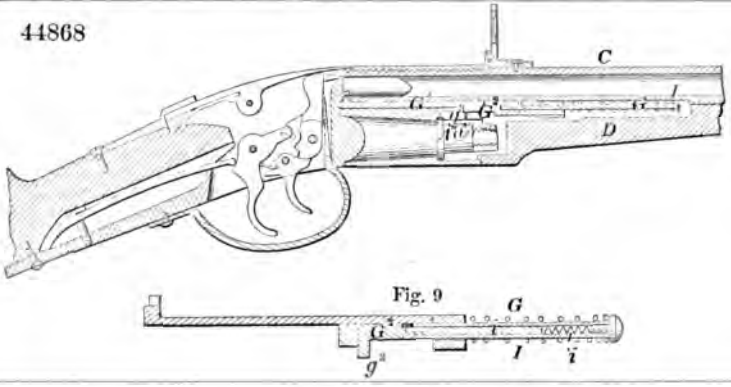

44869

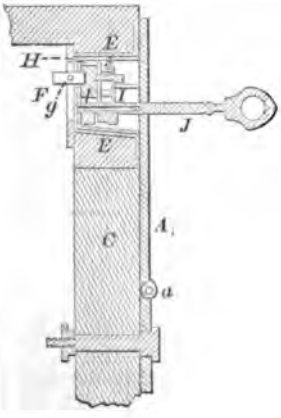

44870

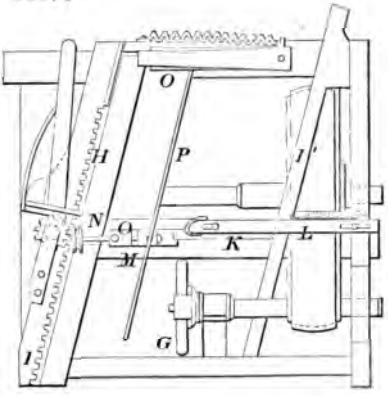

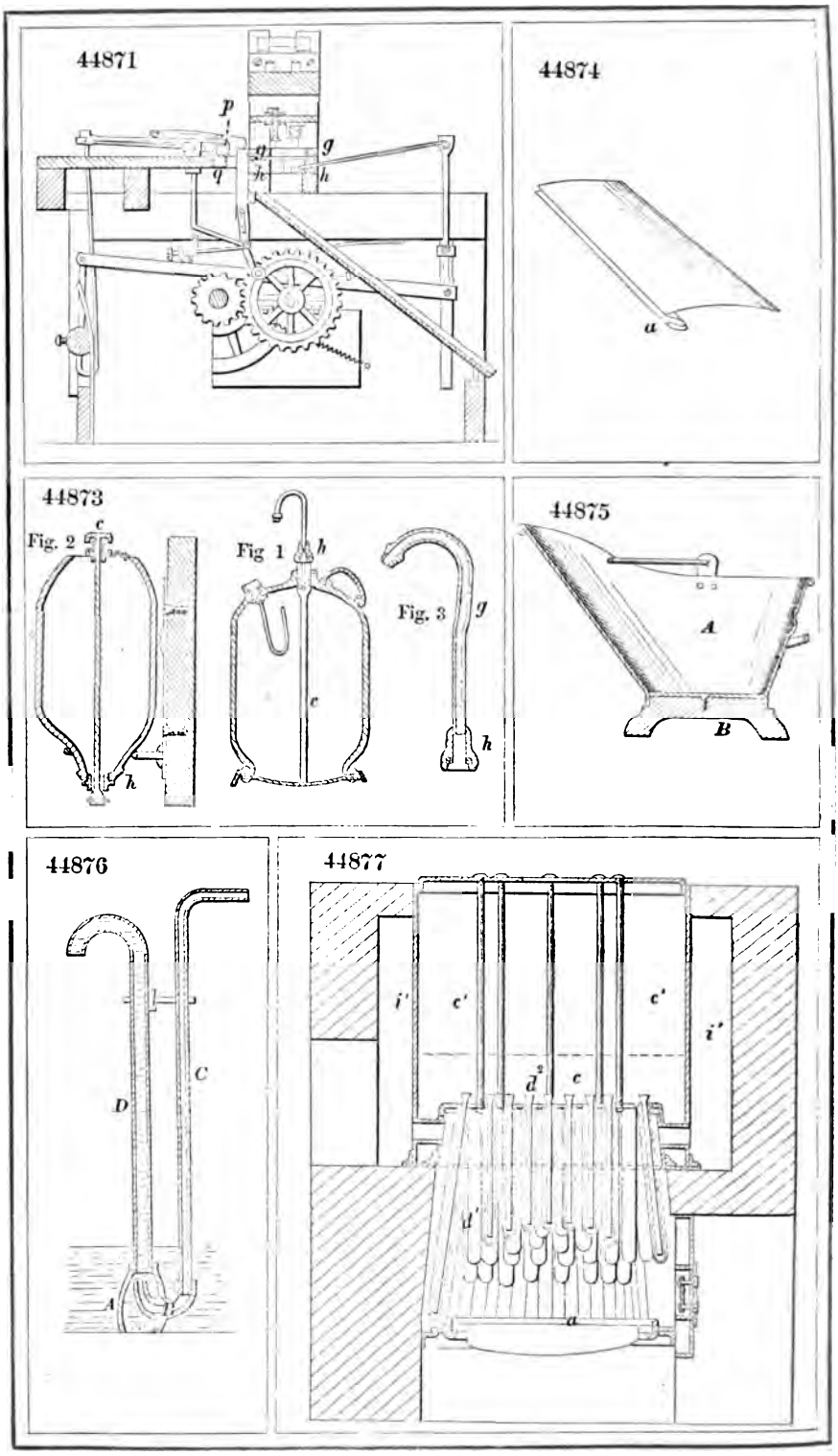
44871
p
g
q
h
g
h
44874
a
44873
Fig. 2
c
h
Fig 1
h
c
Fig. 3
g
h
44875
A
B
44876
D
C
A
44877
i'
c'
c'
i'
d
c
d'
a

44878

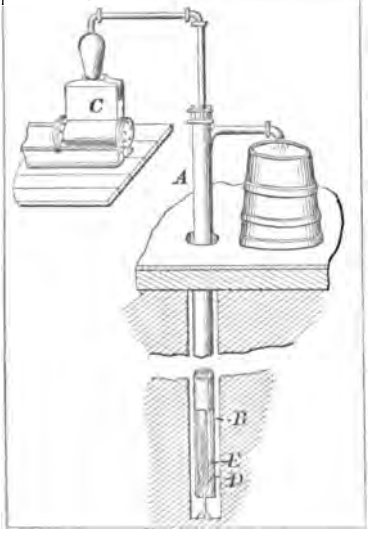

44879

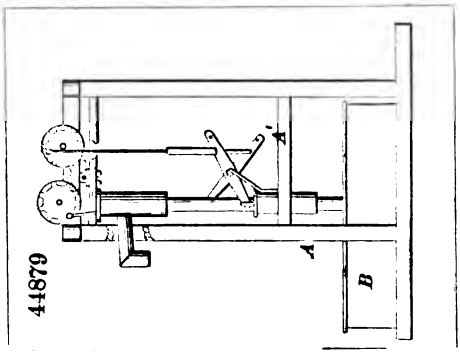

44882

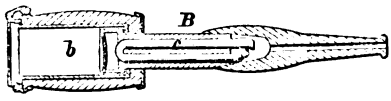

44881

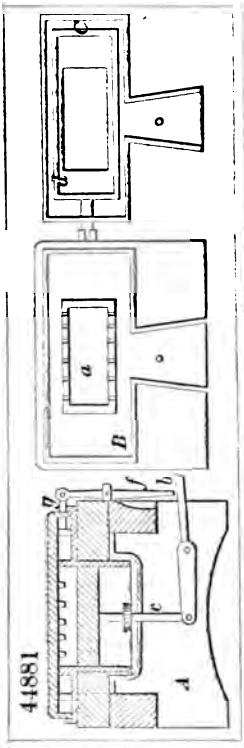

44883

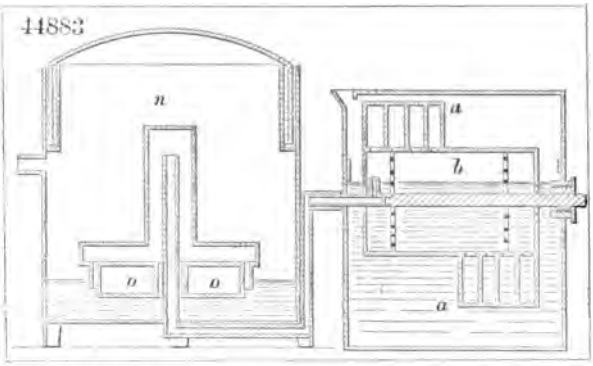

44884

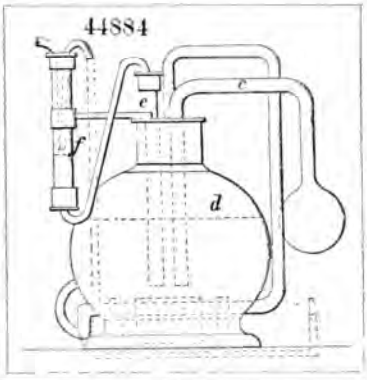

44885

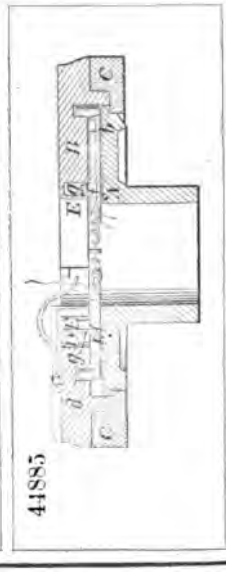

44880

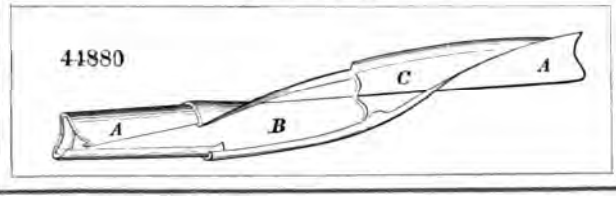

44886

44889

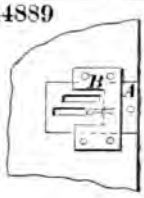

44887

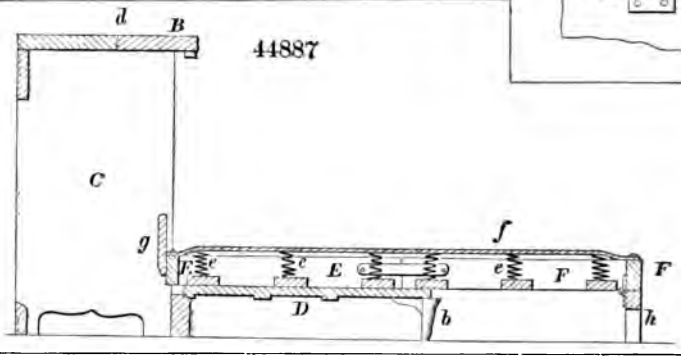

44888

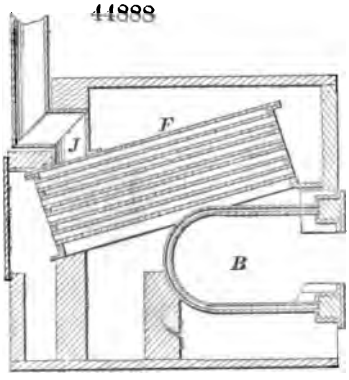

44890

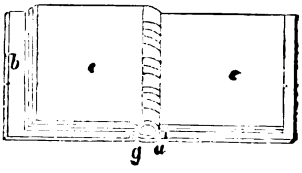

44892

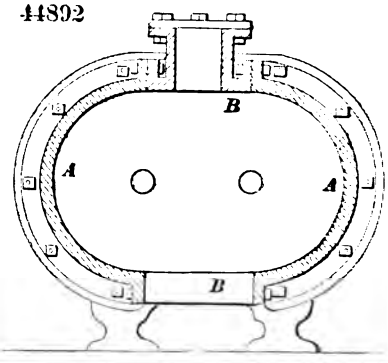

44891

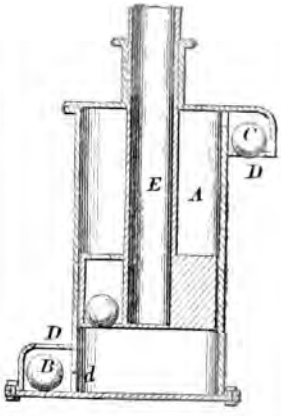

44893

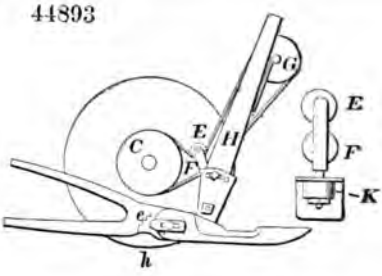

44894

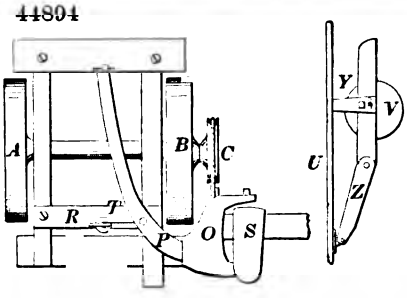

44895

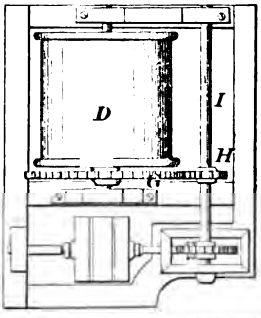

44896

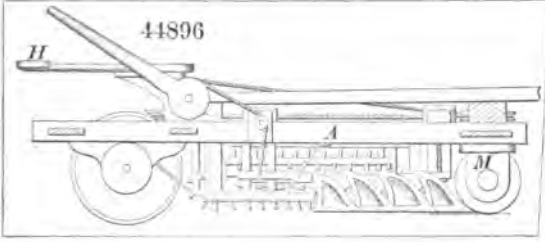

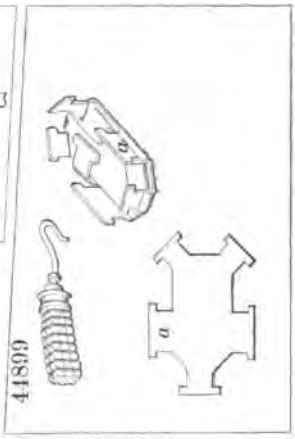

44897

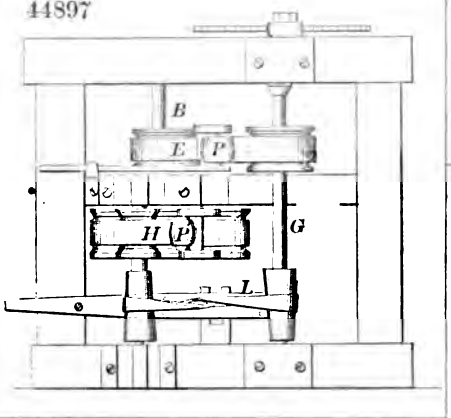

44900

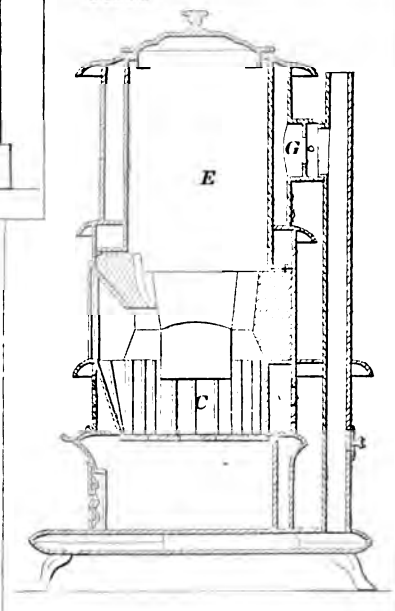

44898

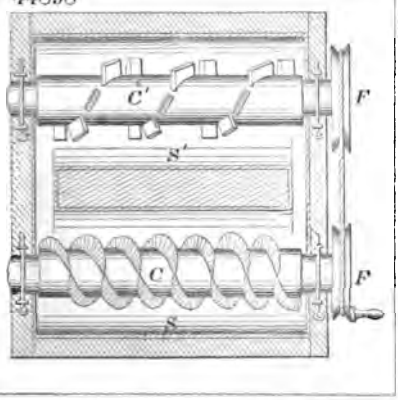

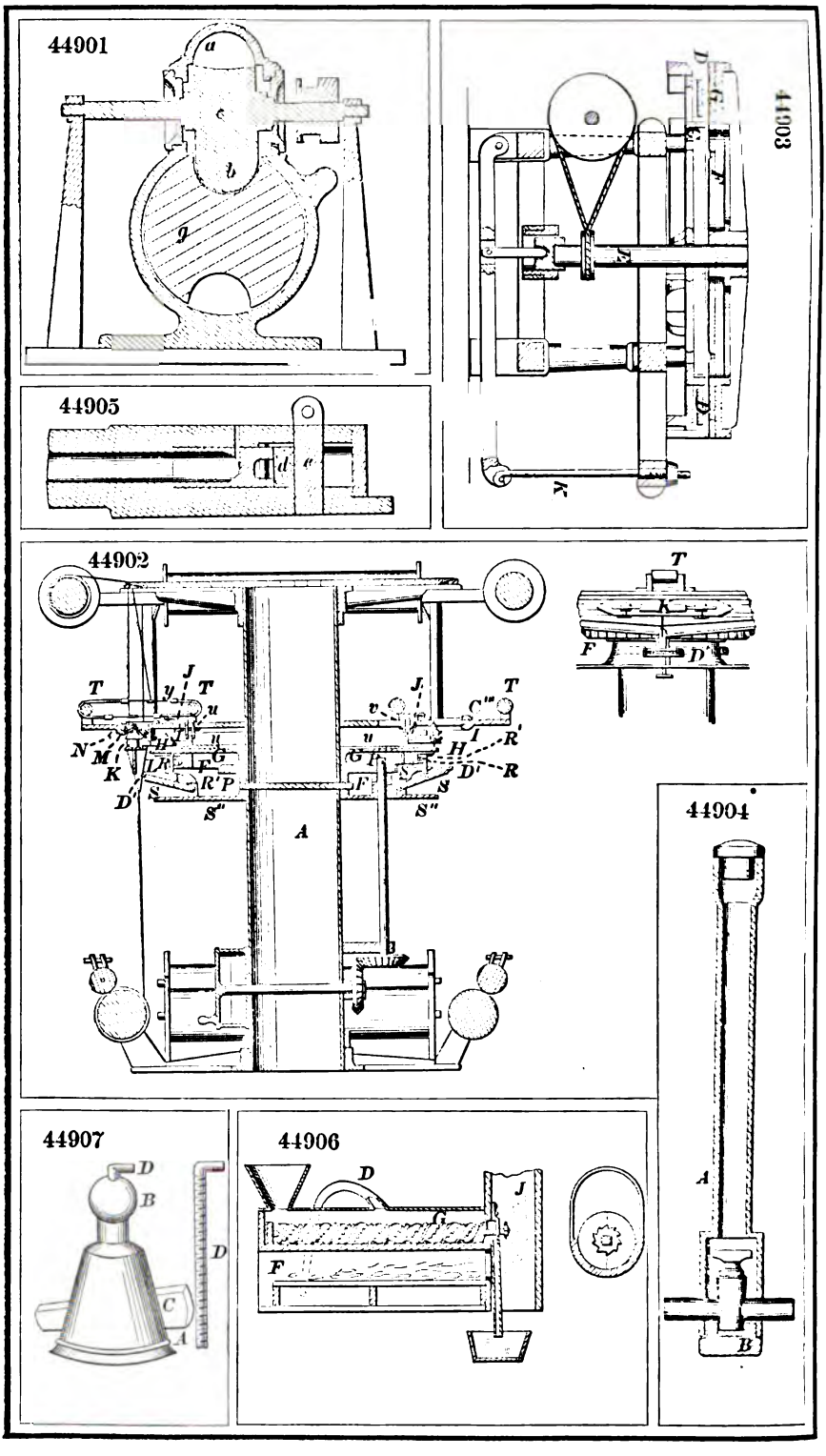
44901
44903
44905
44902
44904
44907
44906

44908

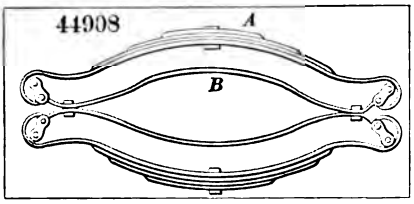

44913

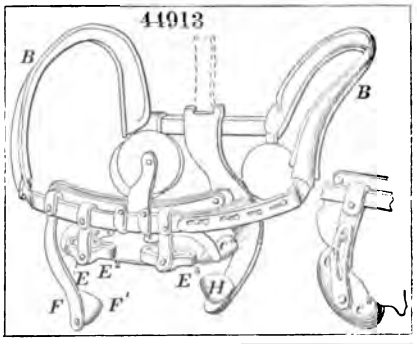

44916

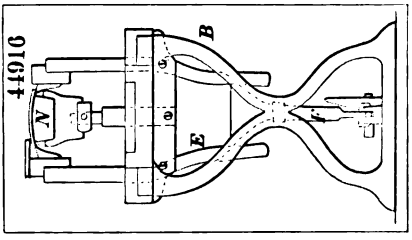

44912

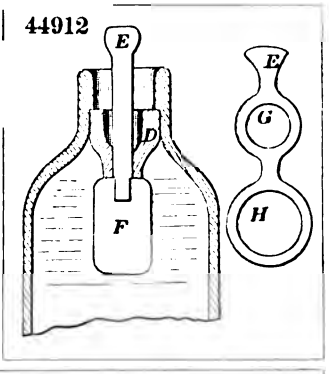

44914

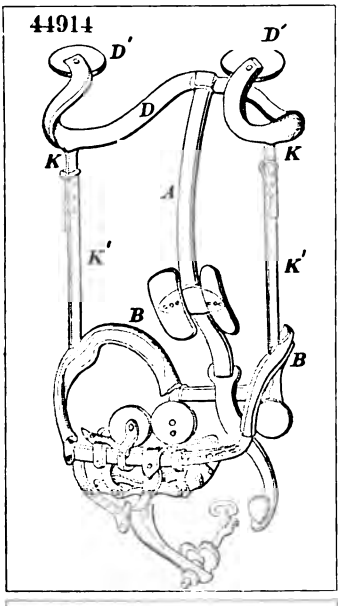

44911

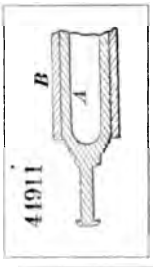

44915

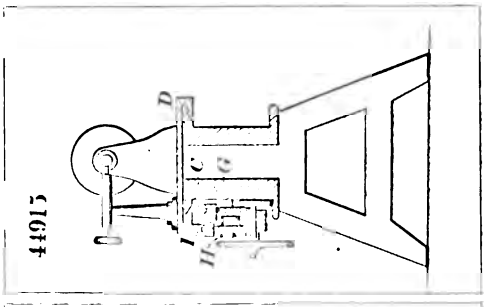

44909

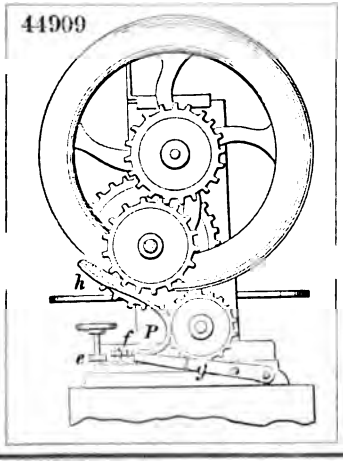

44917

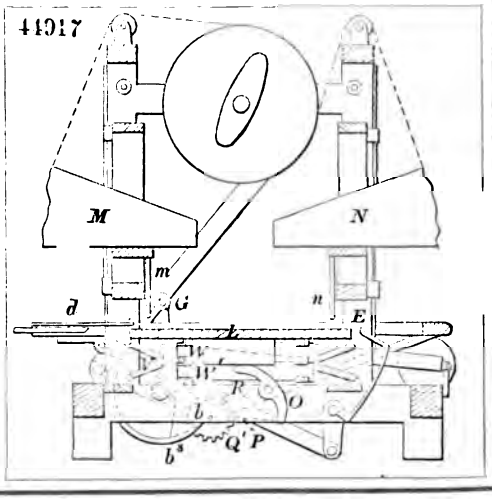

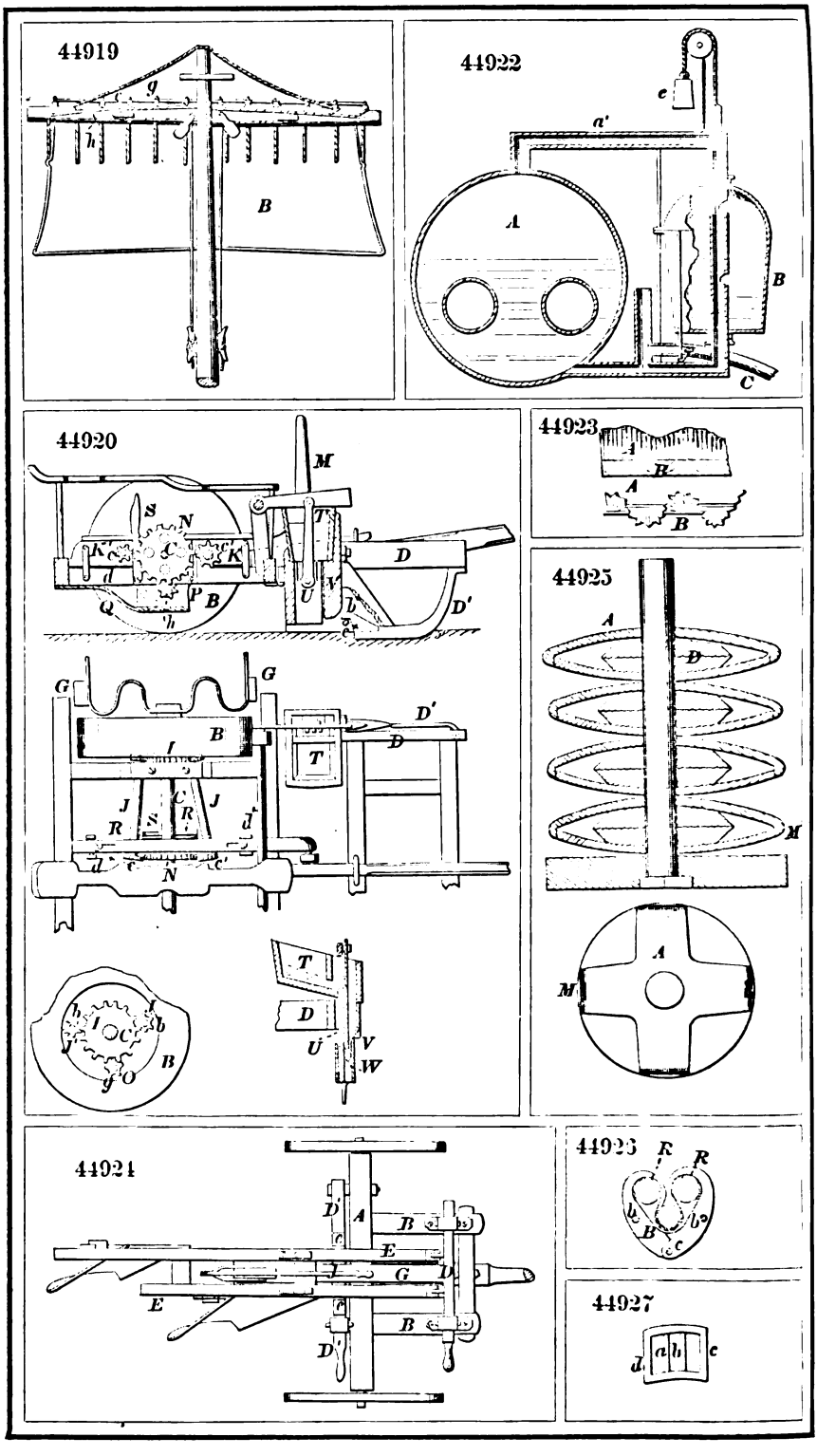
44919
44922
44920
44923
44925
44924
44926
44927

44928

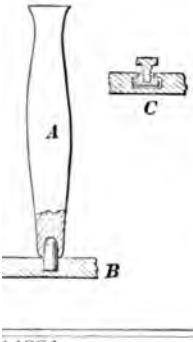

44932

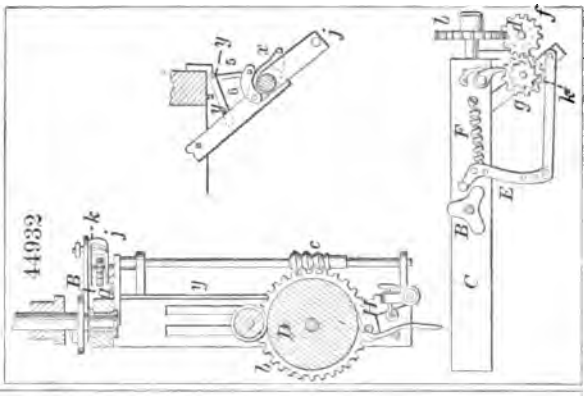

44931

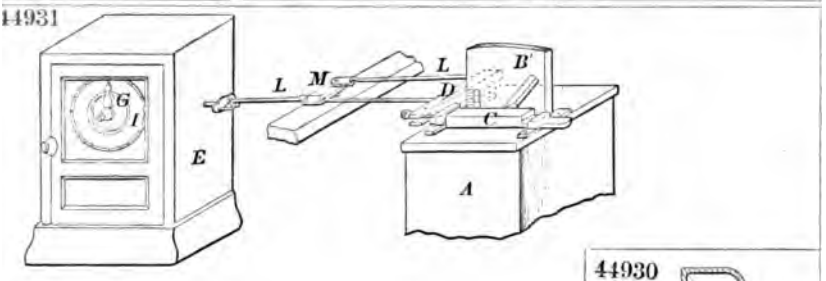

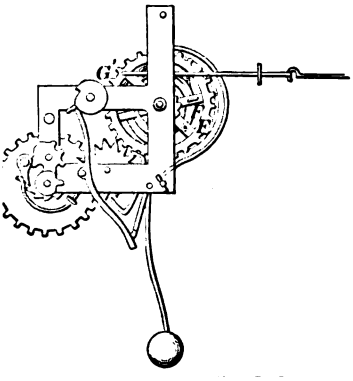

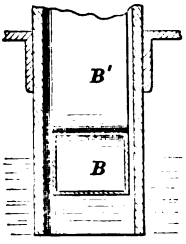

44930

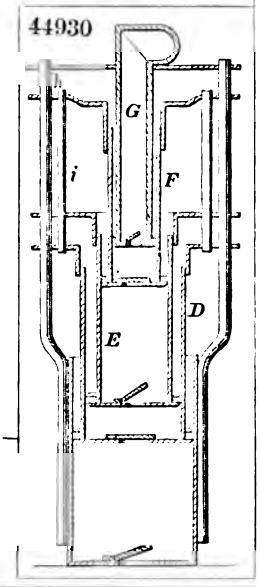

44929

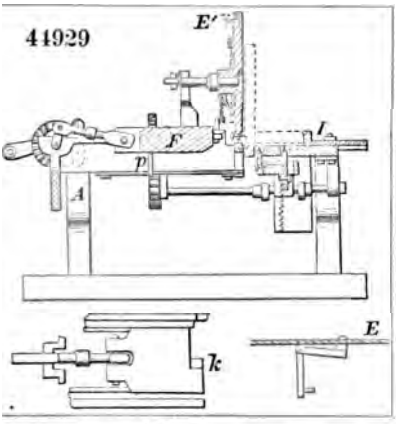

44933

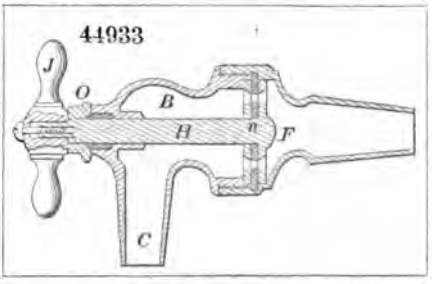

44934

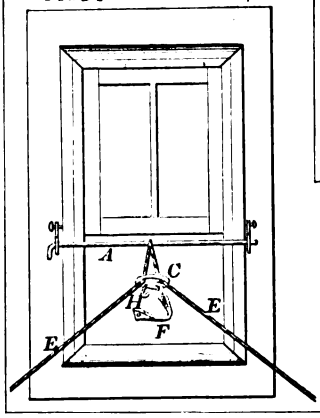

44942

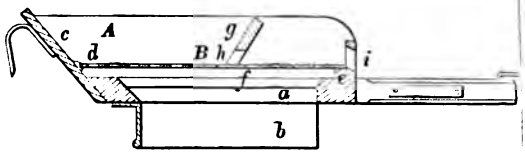

44937

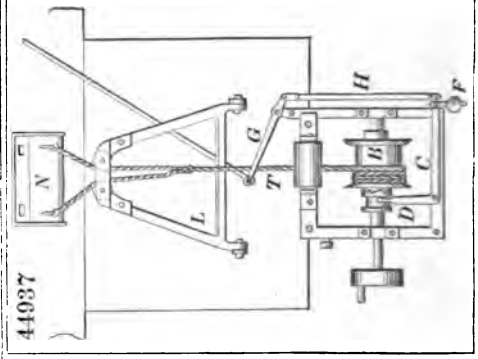

44935

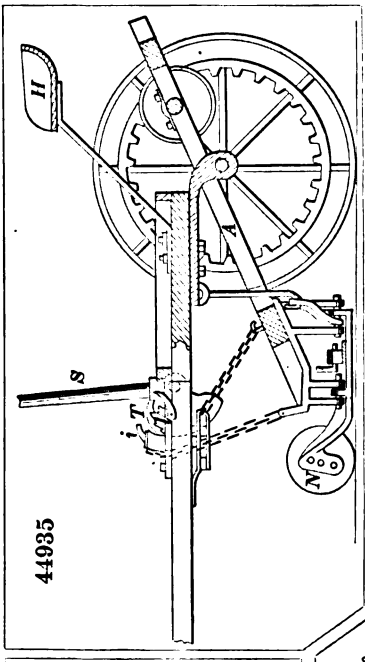

44941

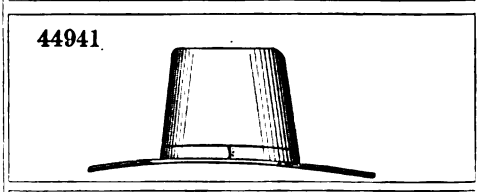

44943

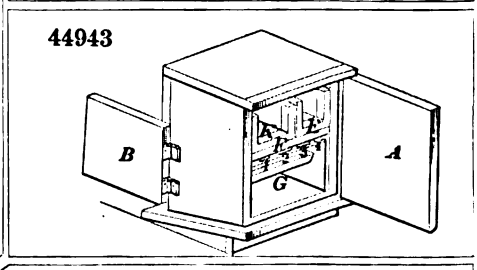

44936

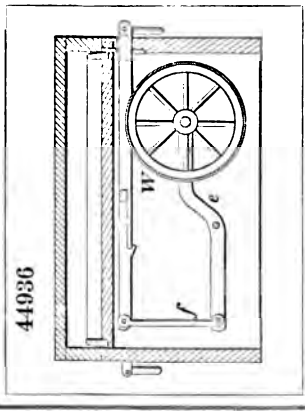

44945

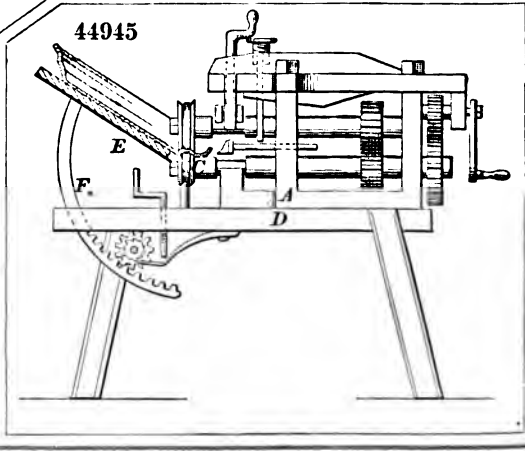

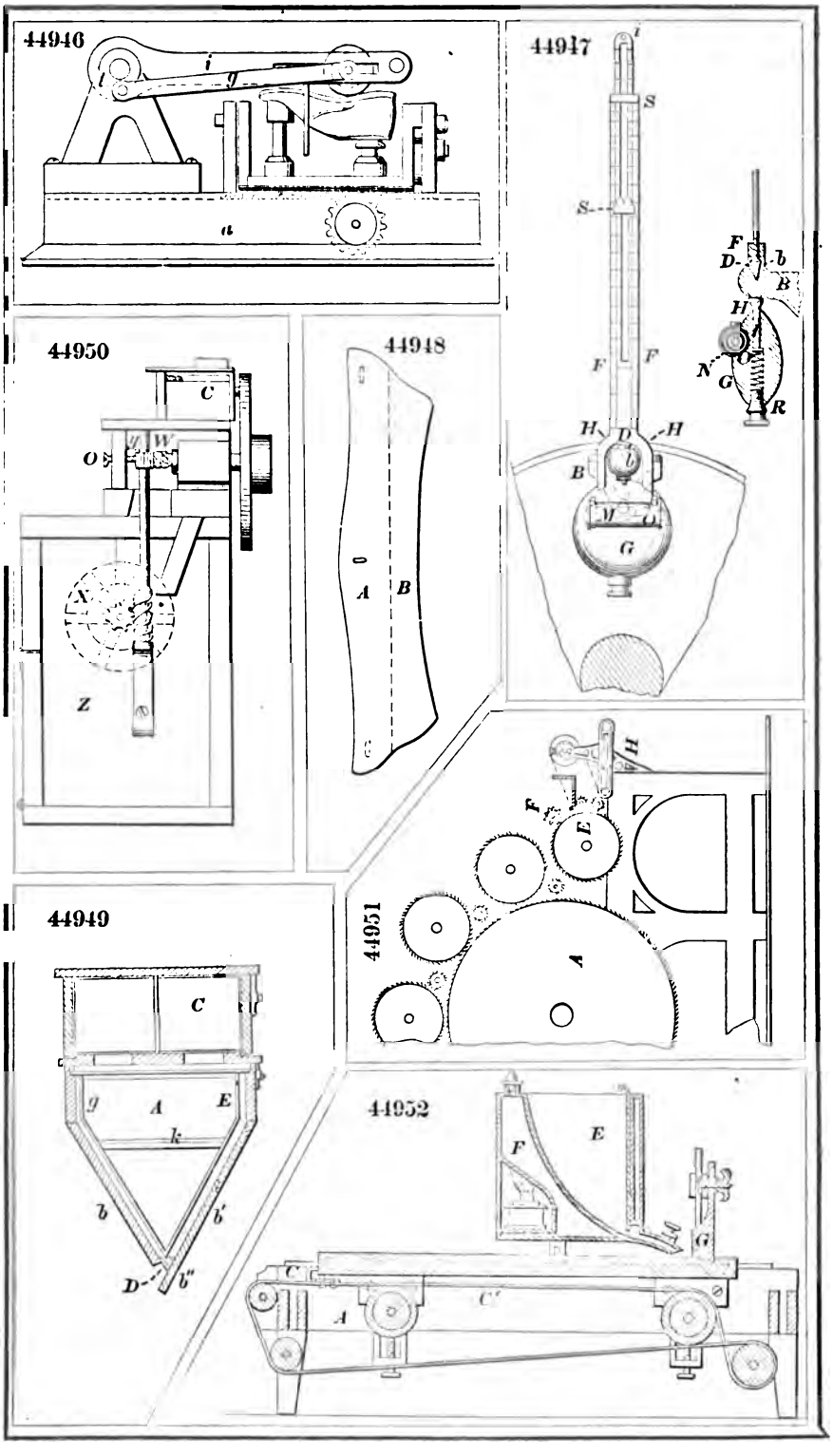
44946
44947
44950
44948
44949
44951
44952

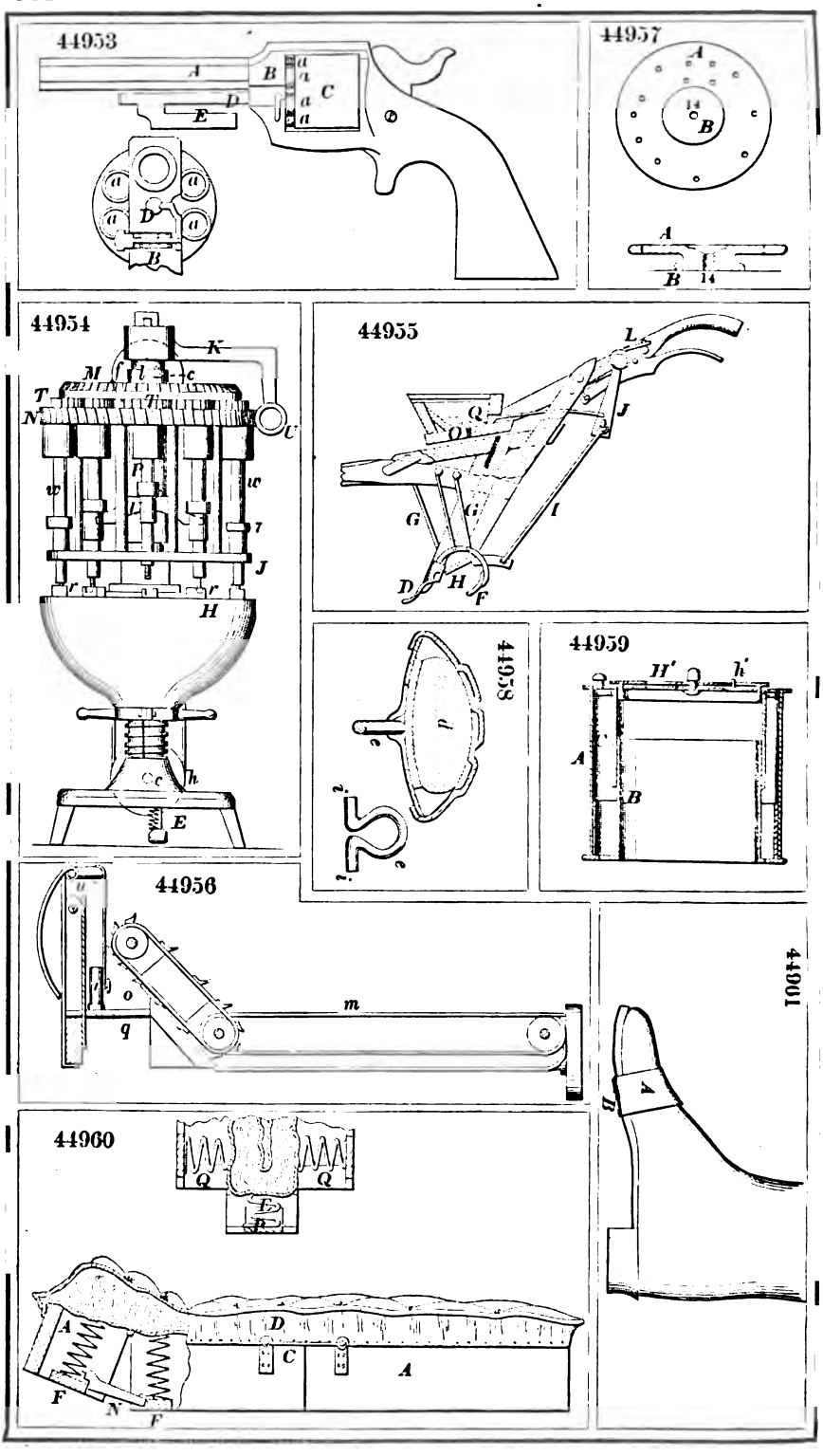
44953
44957
44954
44955
44958
44959
44956
44960
44961

44962

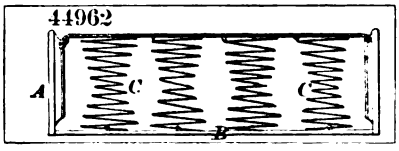

44963

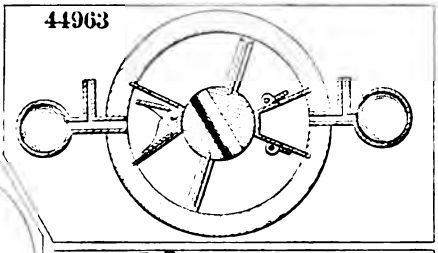

44969

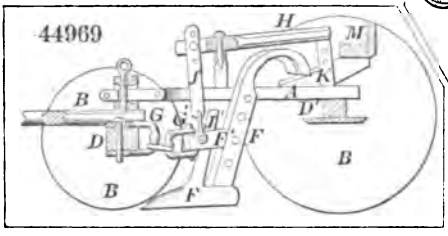

44968

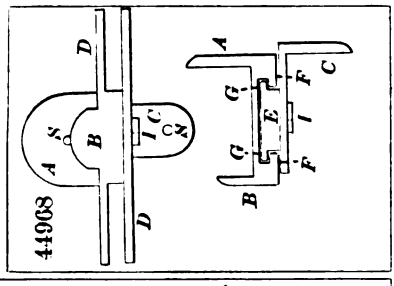

44967

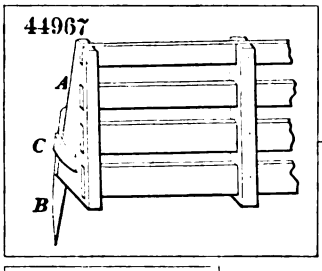

44965

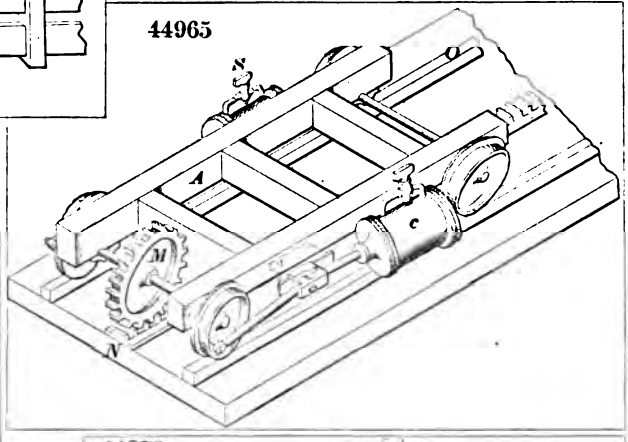

44964

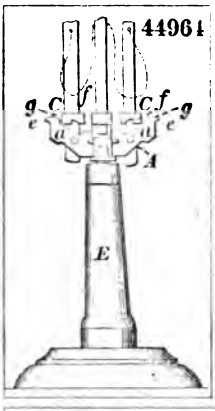

44970

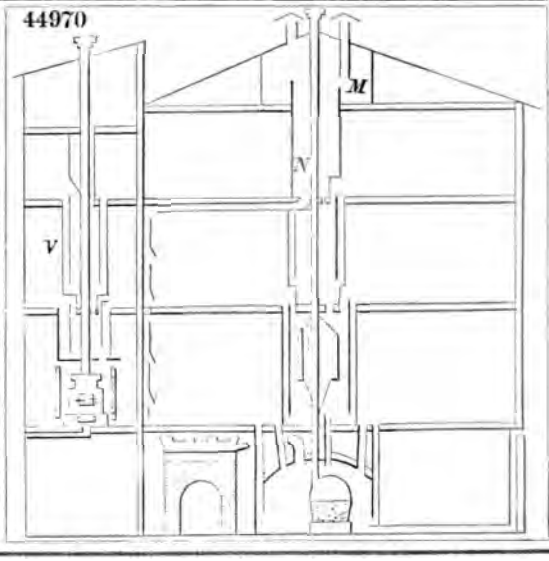

44966

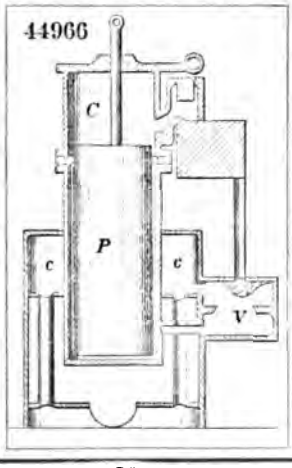

44971

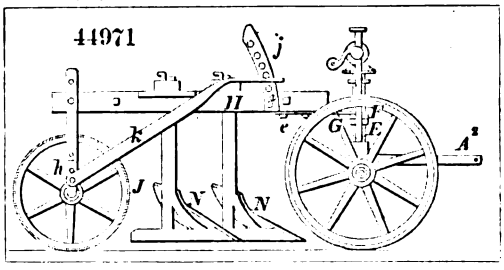

44973

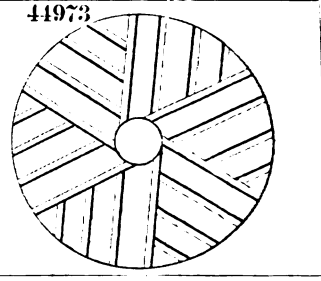

44972

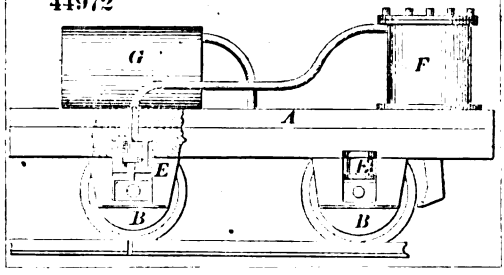

44976

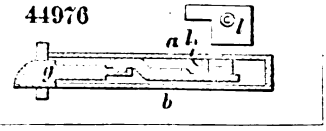

44975

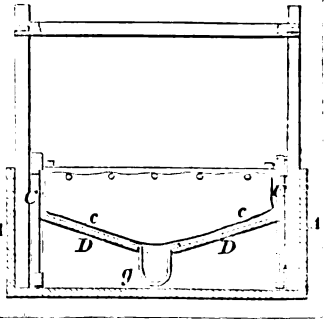

44974

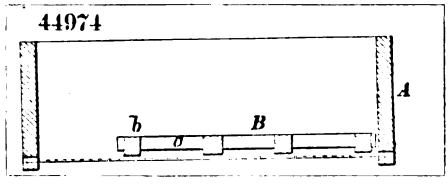

44977

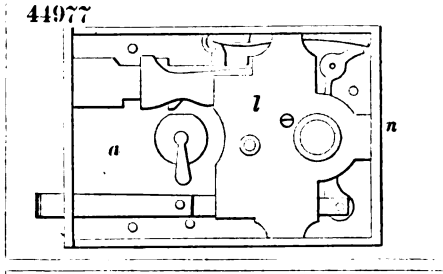

44978

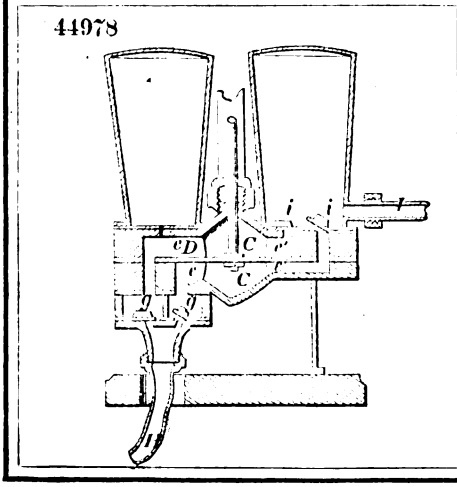

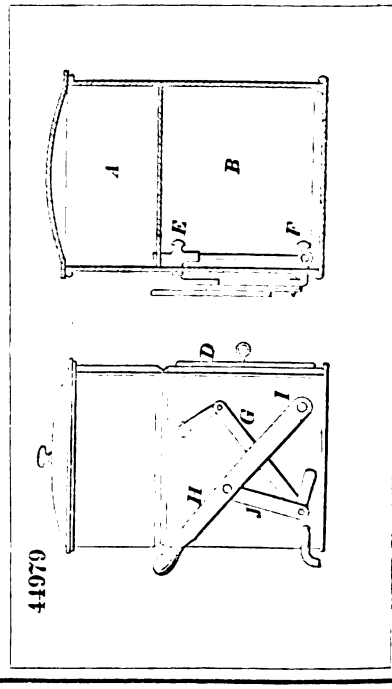

44979

44980

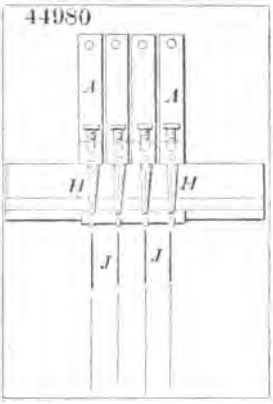

44983

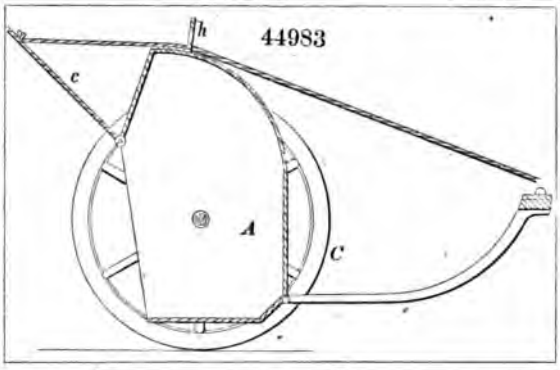

44981

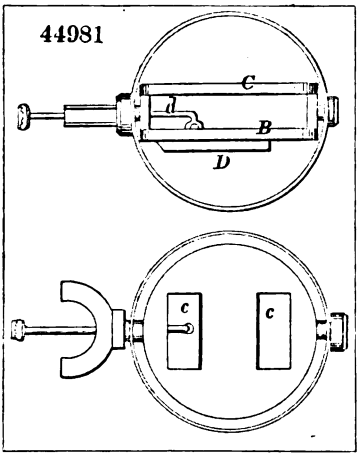

44982

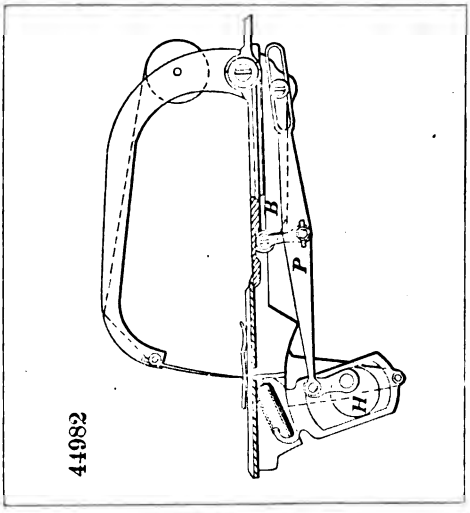

44984

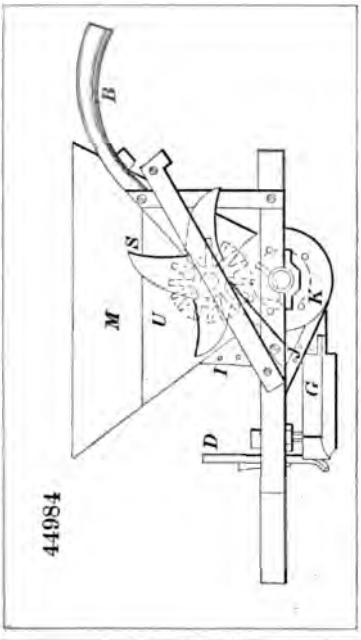

44985

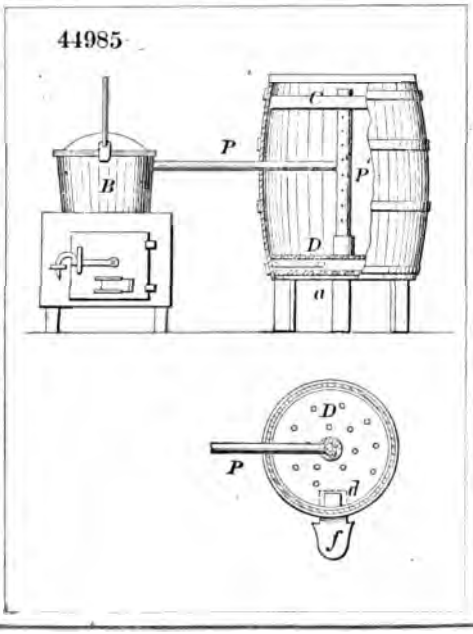

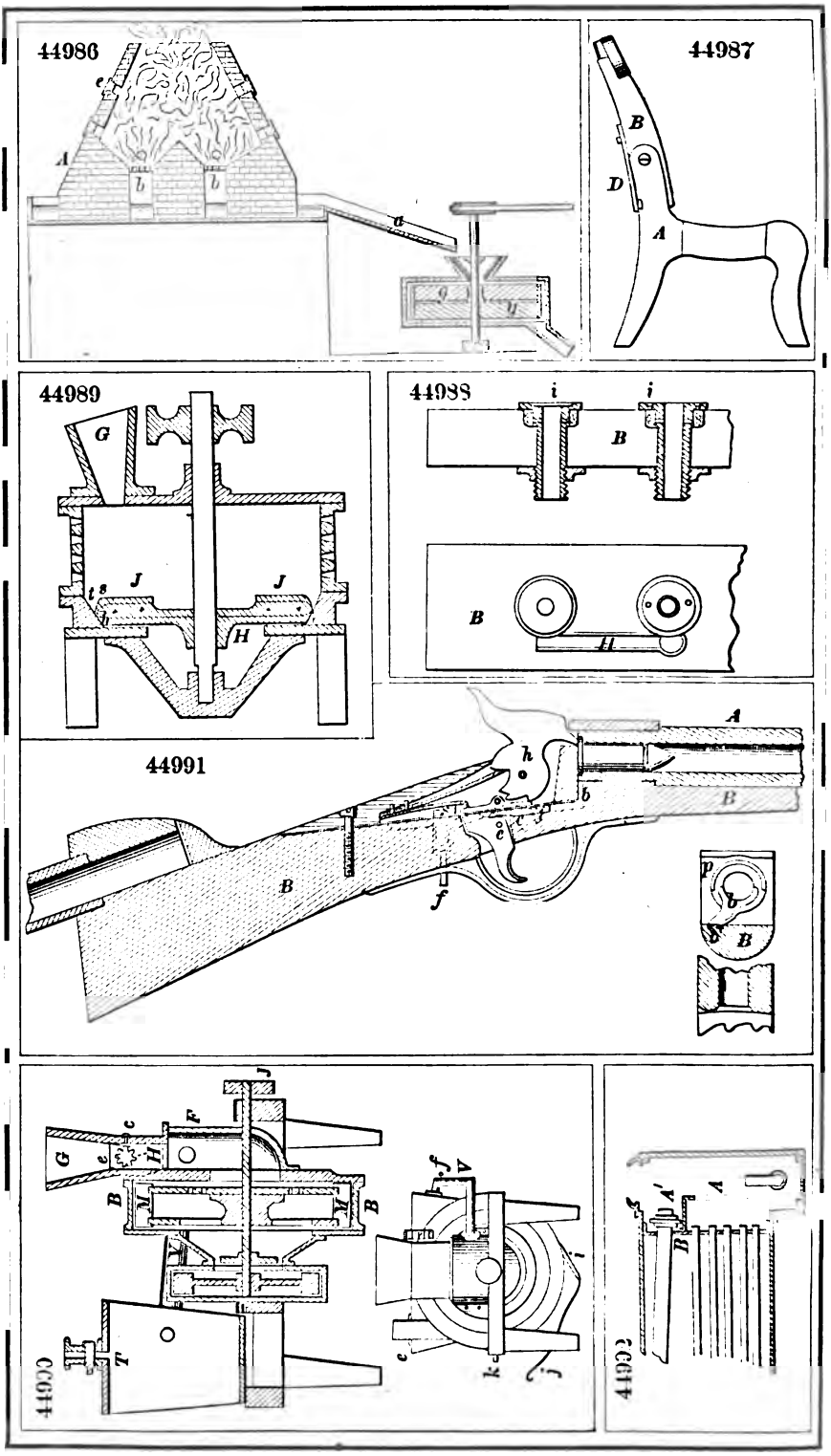
44986
44987
44988
44989
44991
CC614
CC614

44993

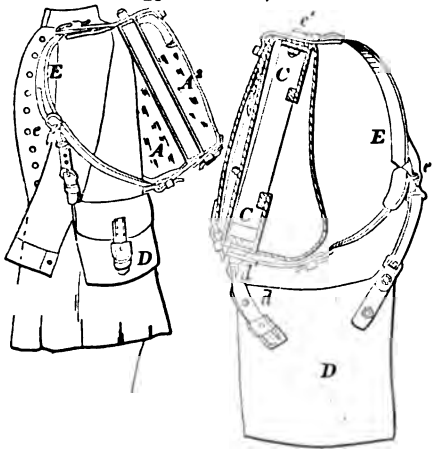

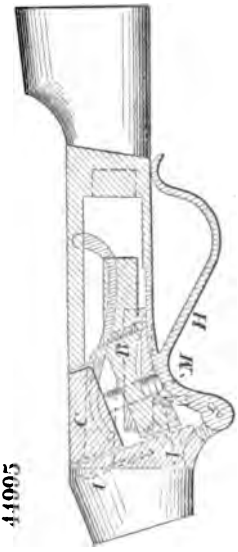

44995

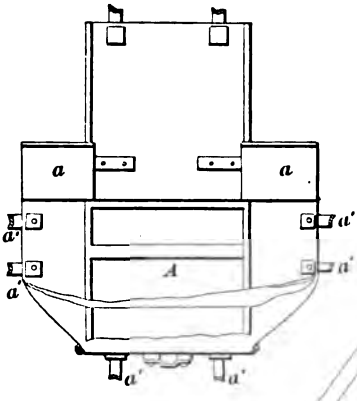

44996

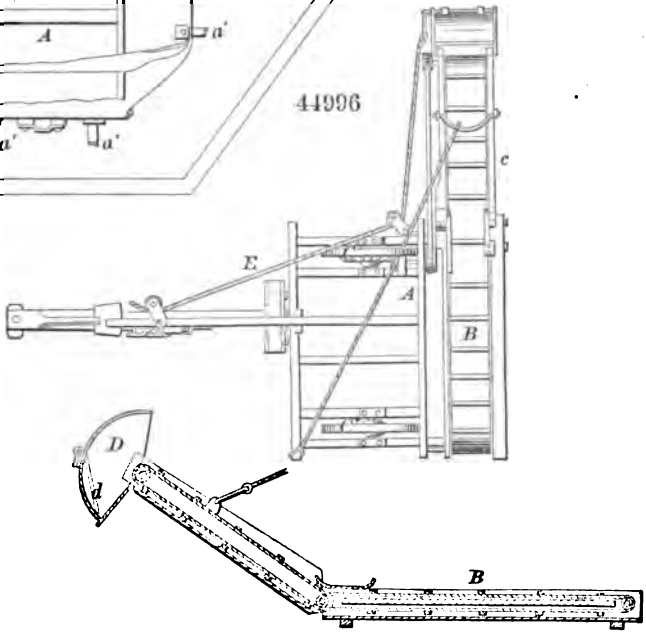

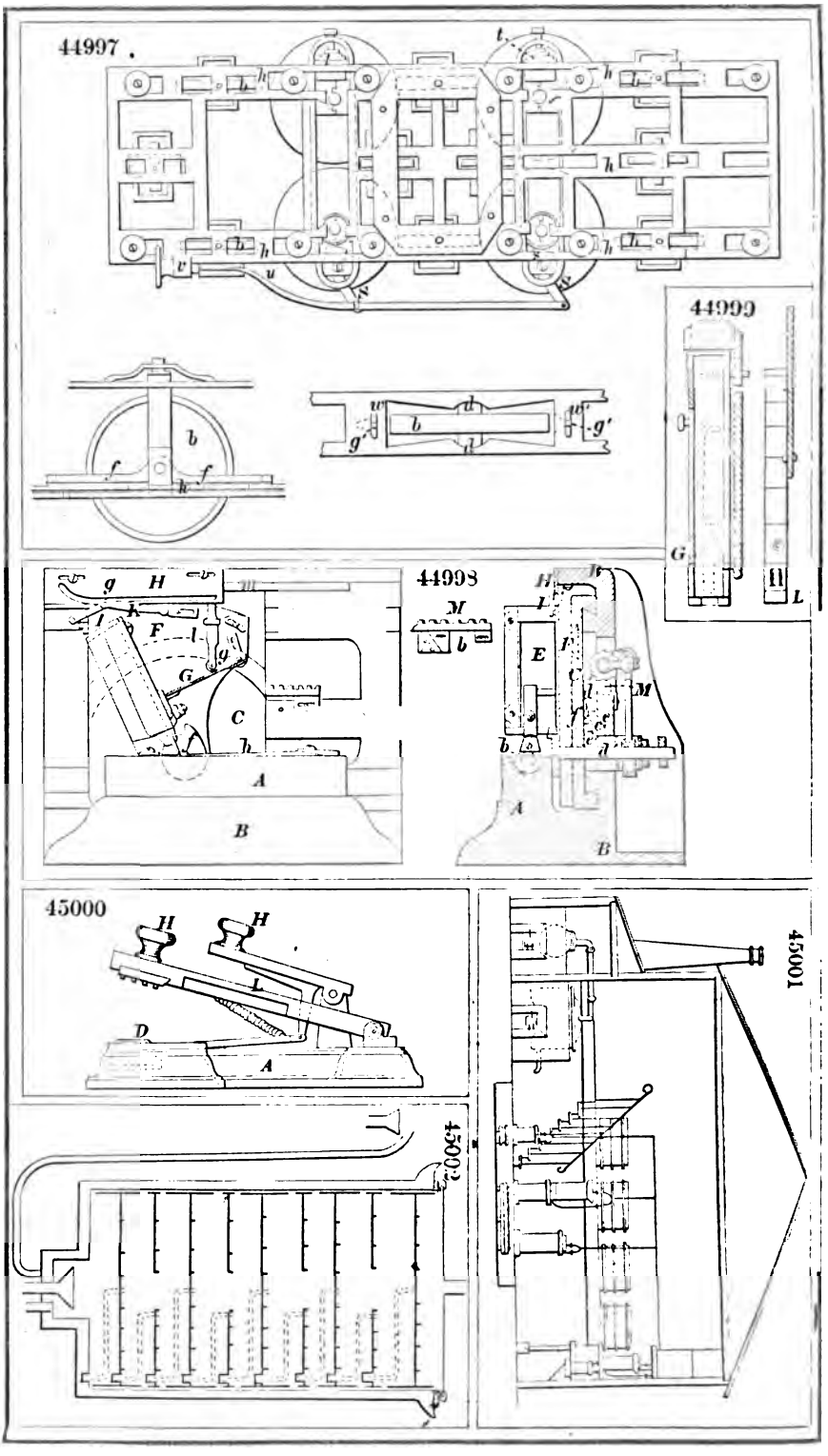
44997
44999
44998
45000
45001
45002

45003

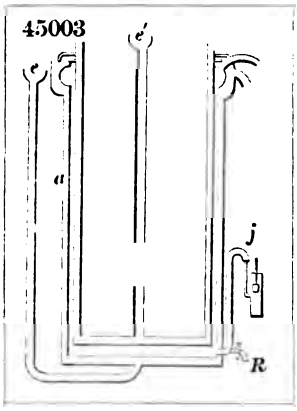

45004

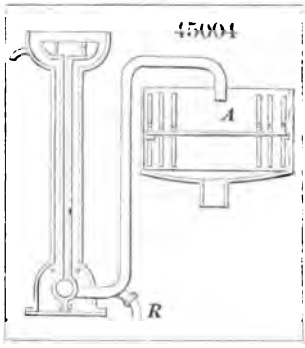

45005

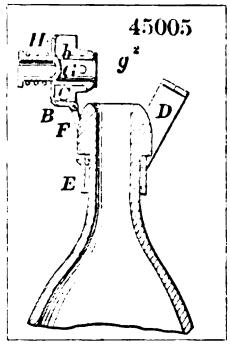

45010

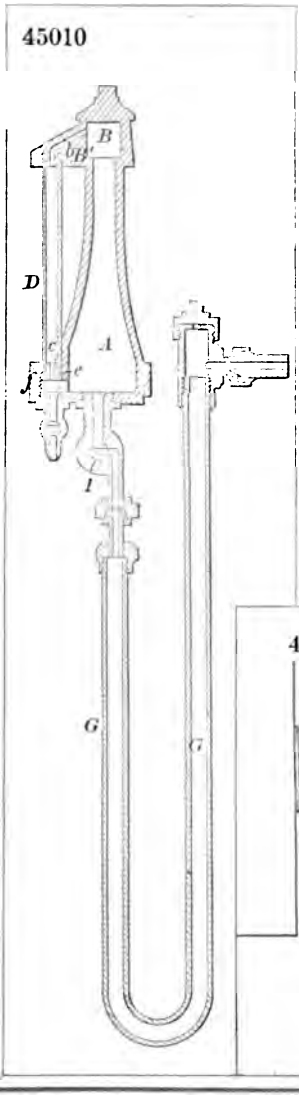

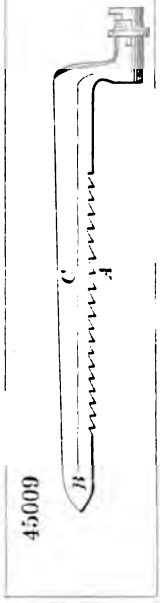

45009

45007

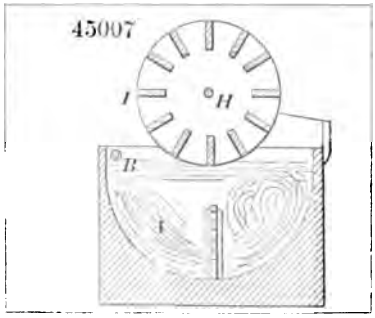

45011

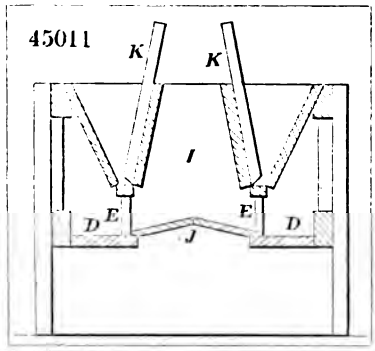

45012

45013

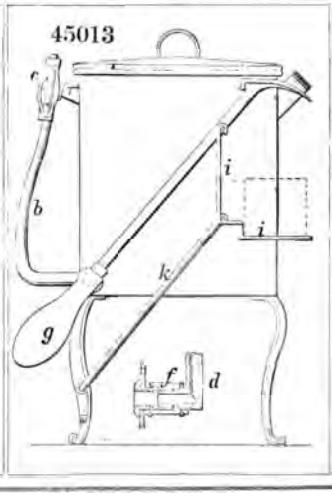

45014

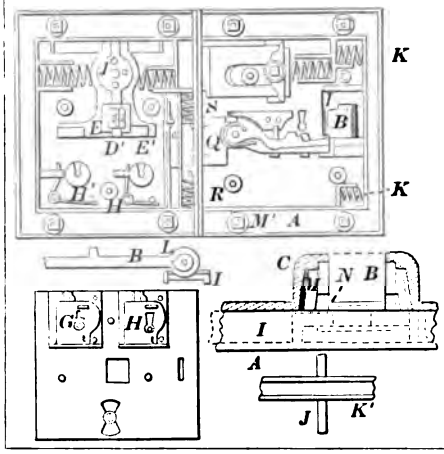

45015

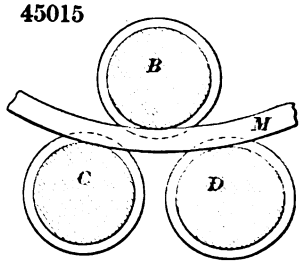

45016

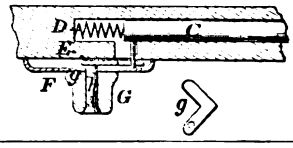

45017

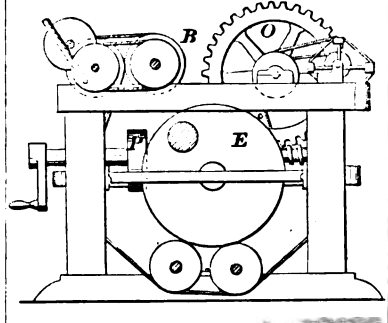

Fig. 4

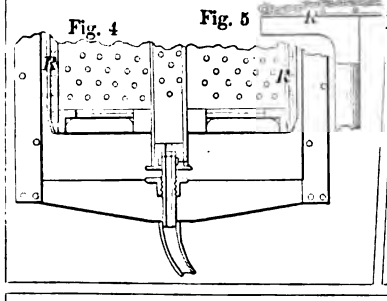

Fig. 5

45019

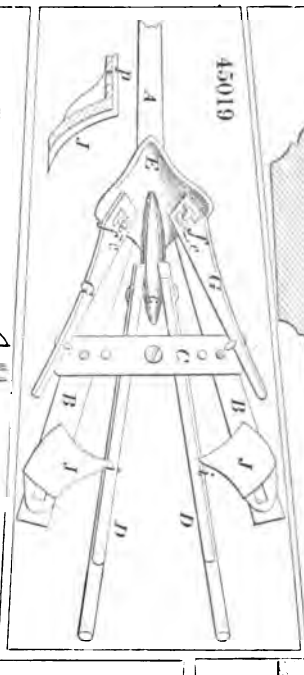

45020

45021

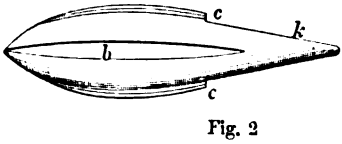

Fig. 7

Fig. 2

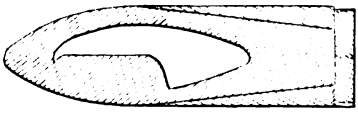

Fig. 3

45013

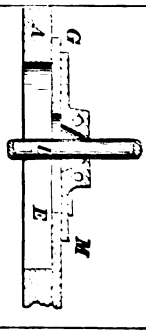

45023

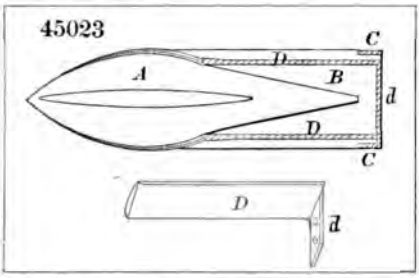

45024

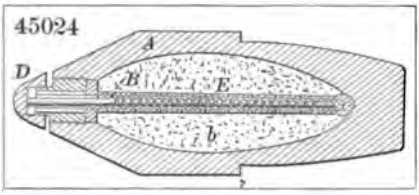

45025

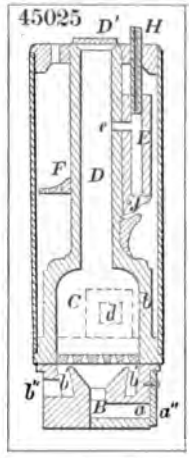

45026

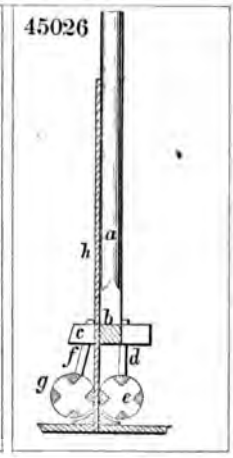

45027

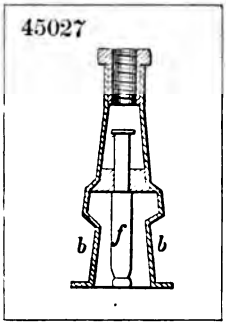

45029

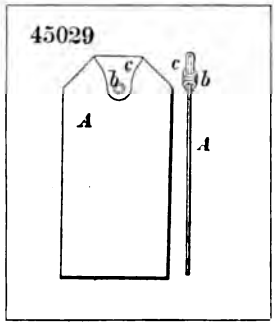

45030

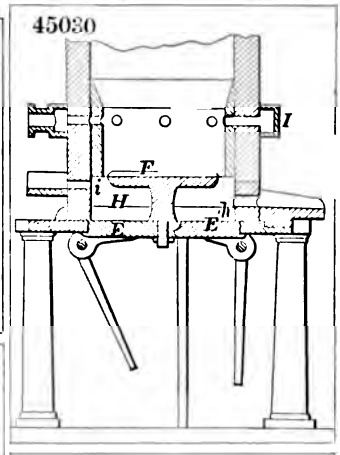

45032

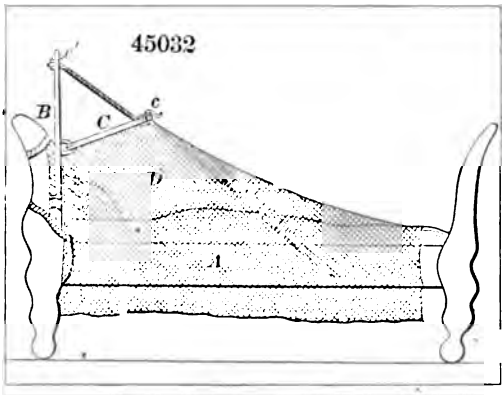

45033

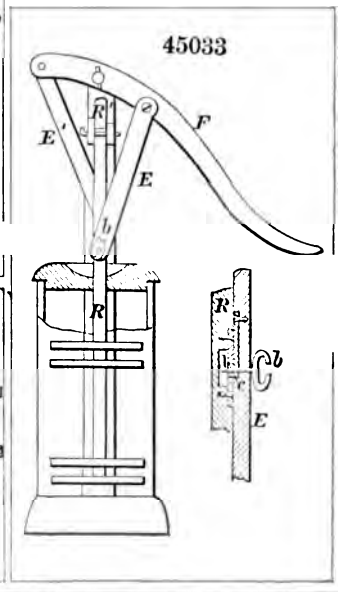

45031

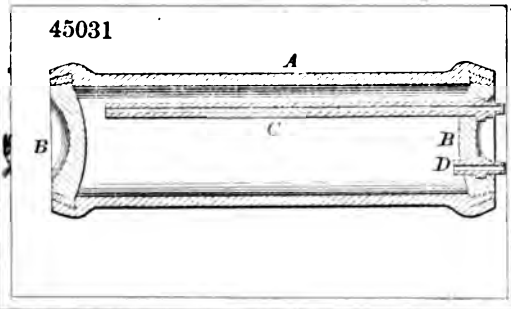

45034

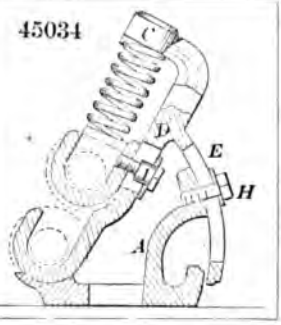

45036

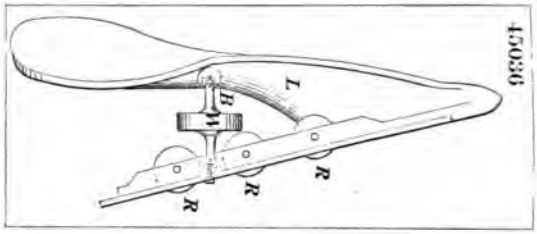

45041

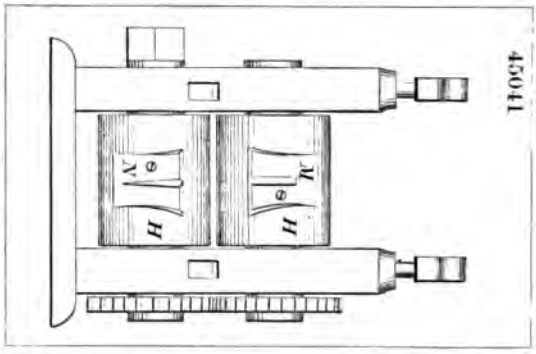

45039

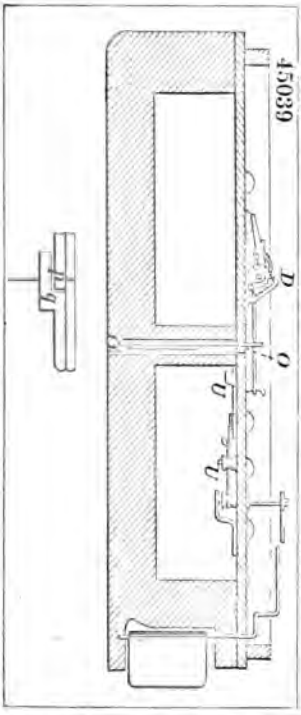

45035

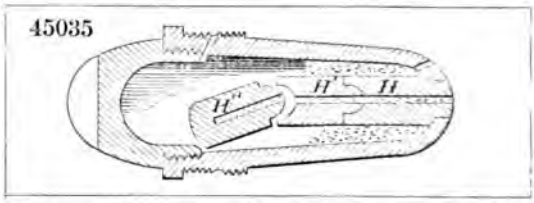

45038

45042

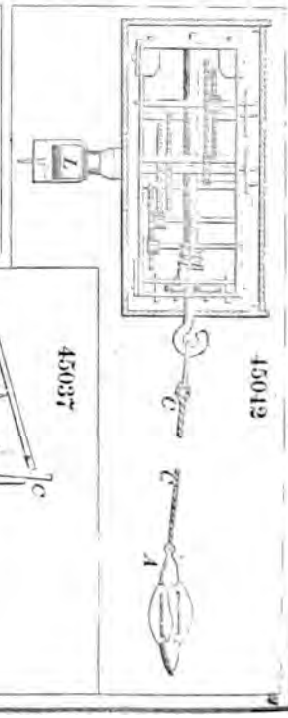

45040

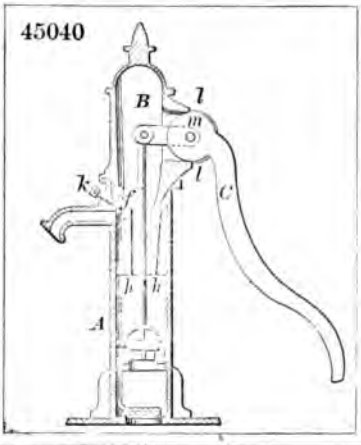

45037

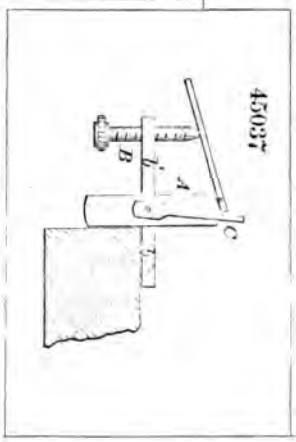

45043

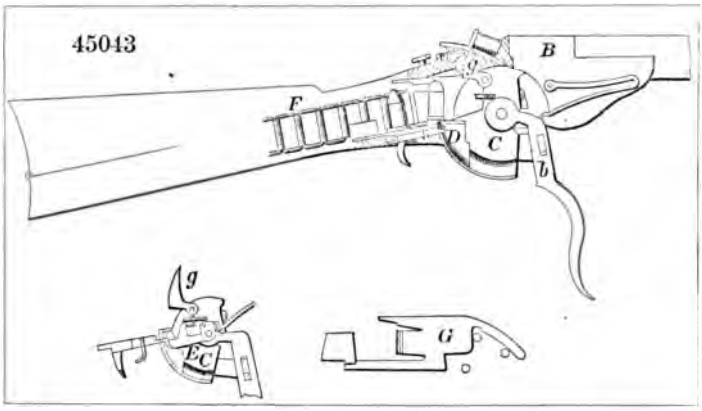

45044

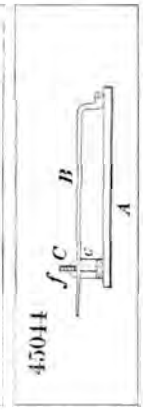

45045

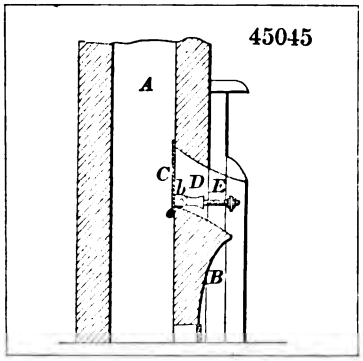

45046

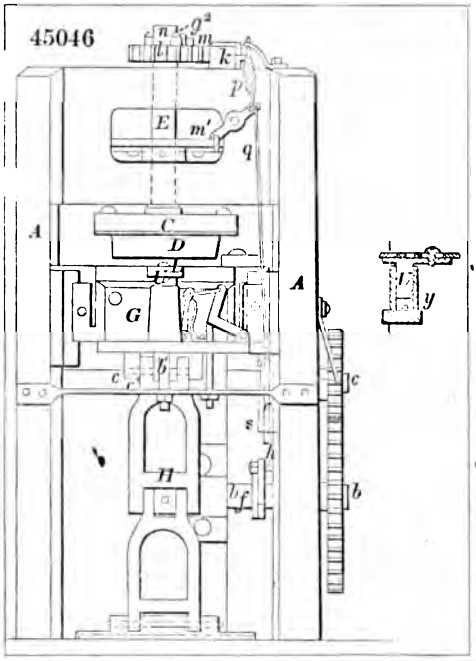

45047

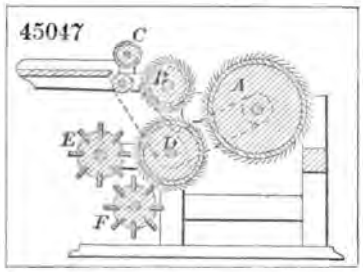

45049

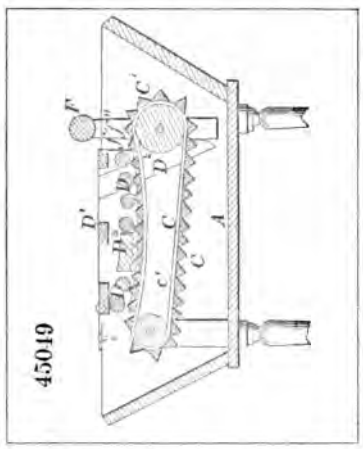

45050

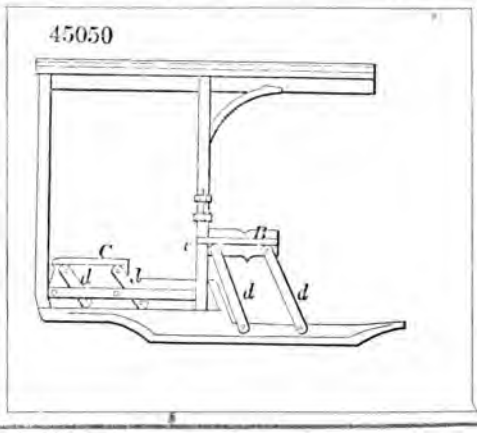

45051

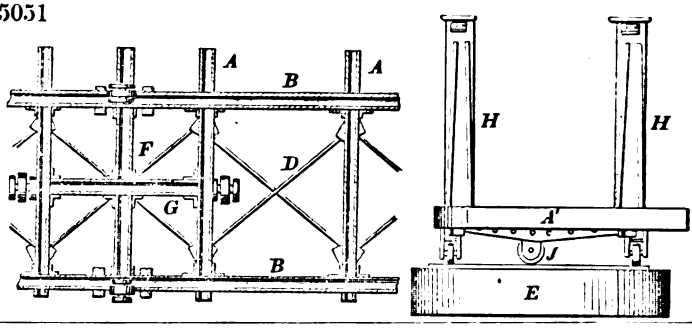

45052

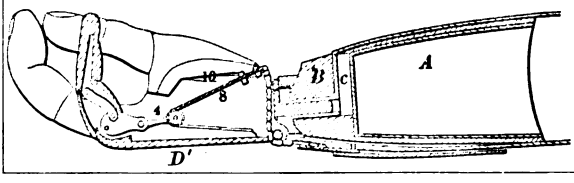

45053

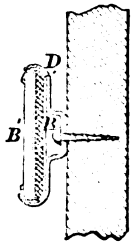

45054

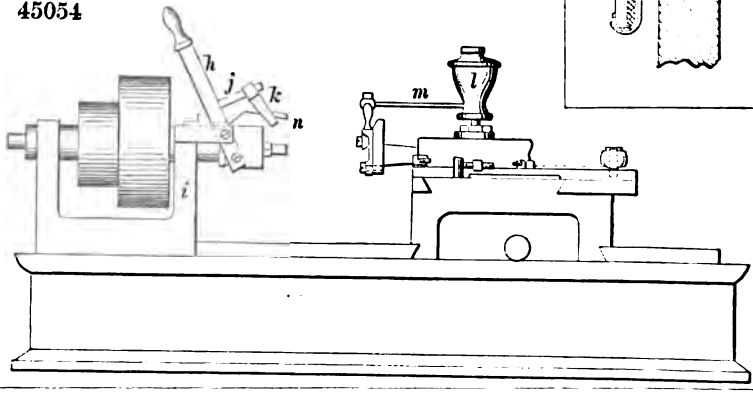

45055

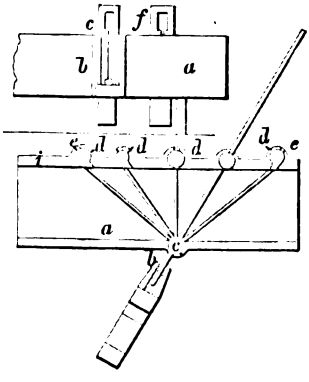

45056

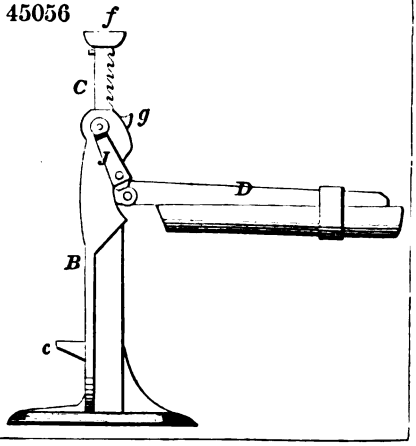

45058

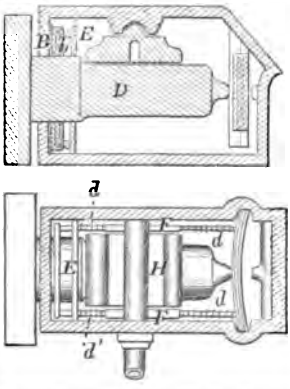

45061

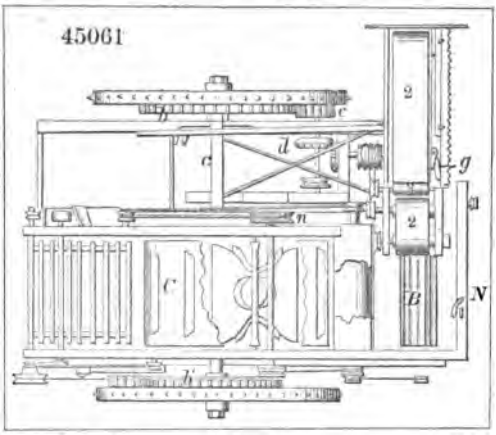

45060

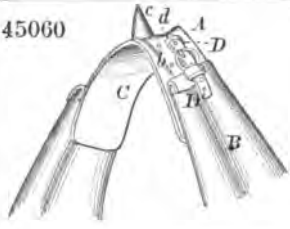

45059

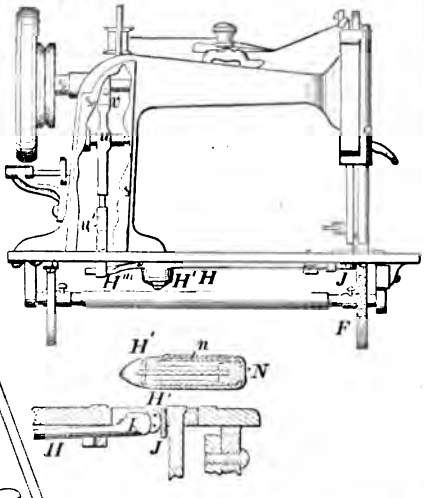

45062

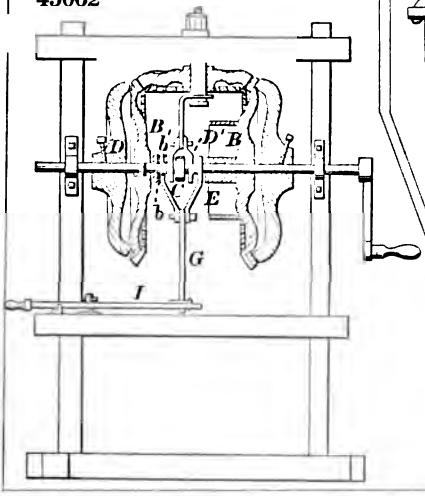

45064

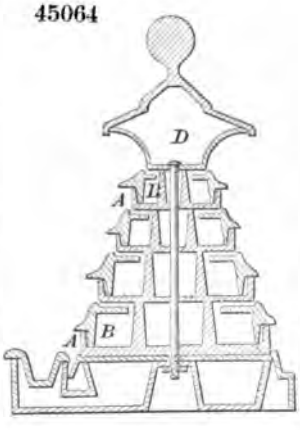

45063

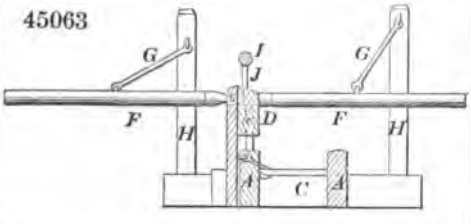

45065

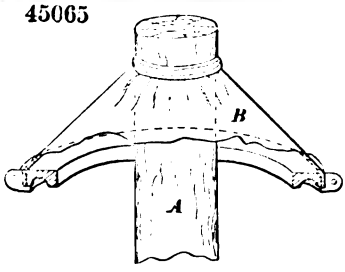

45066

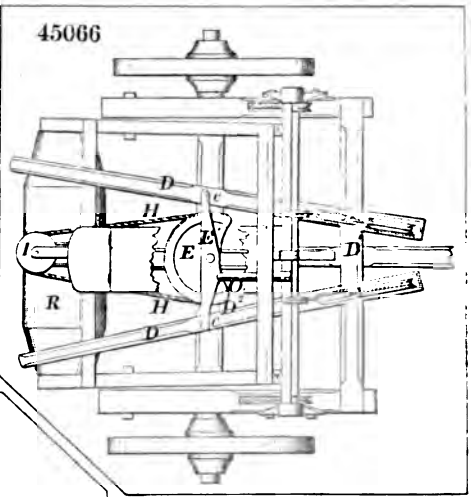

45069

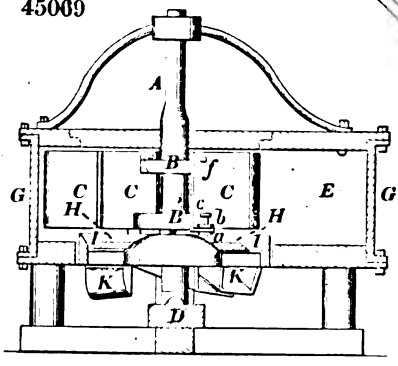

45070

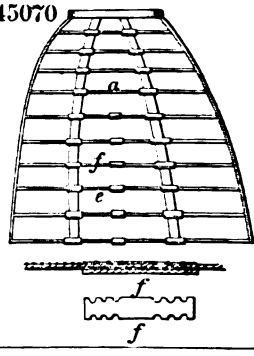

45068

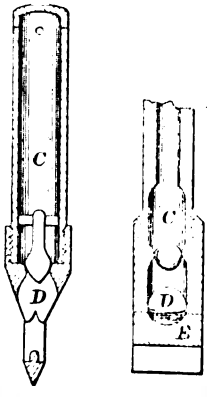

45067

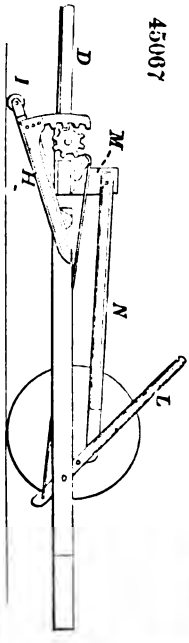

45071

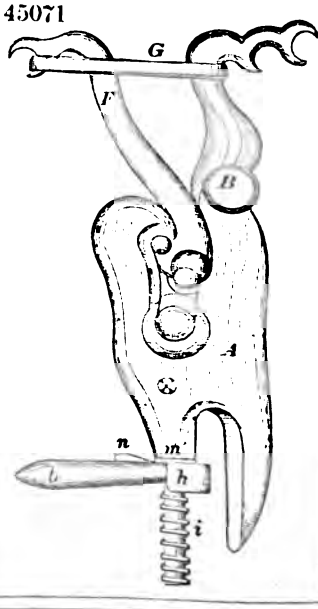

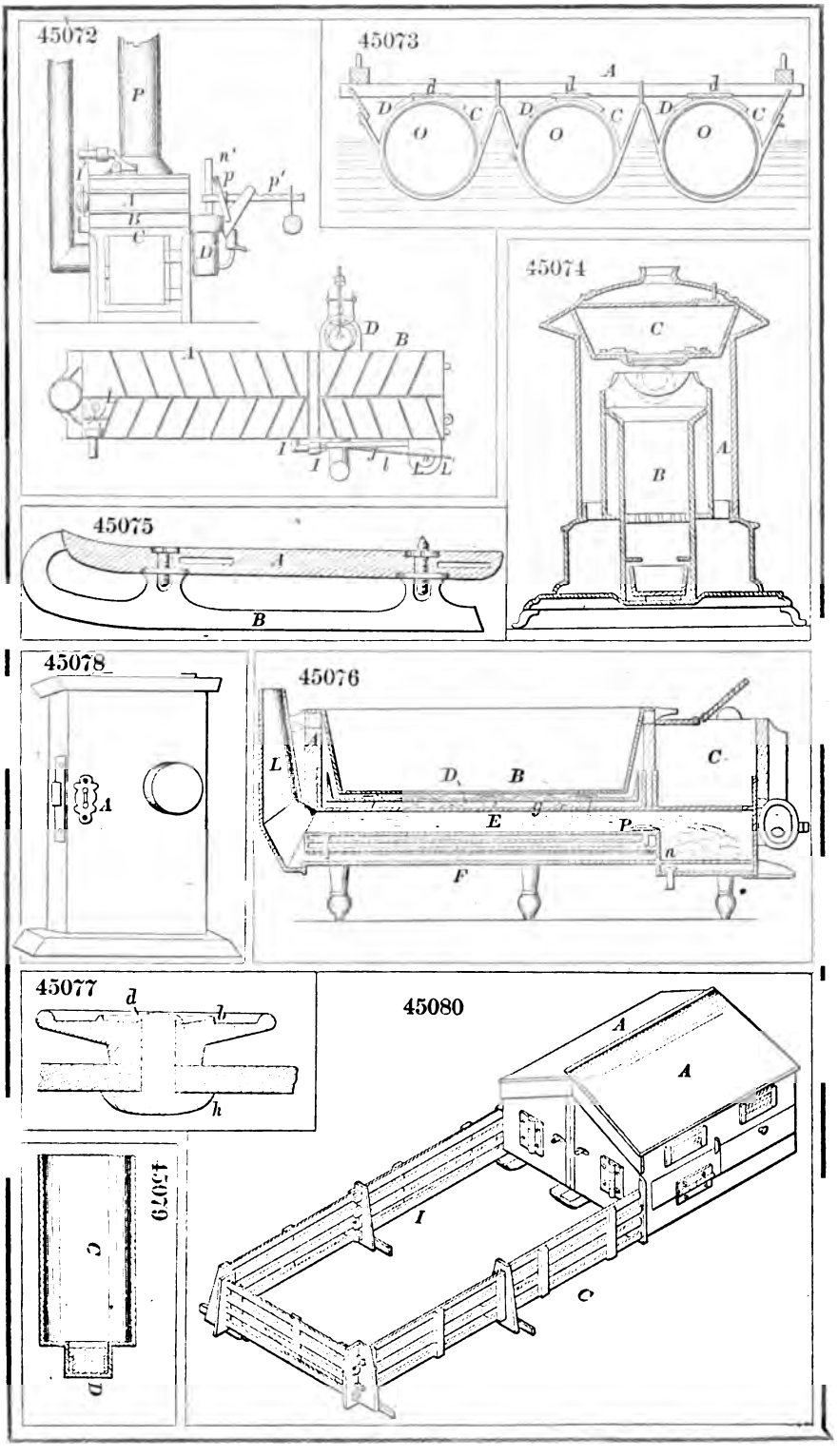
45072
45073
45074
45075
45076
45077
45078
45079
45080

45081

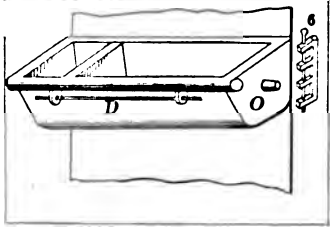

45082

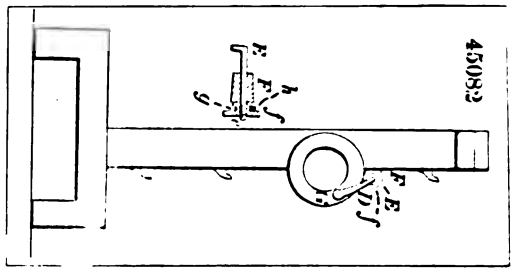

45083

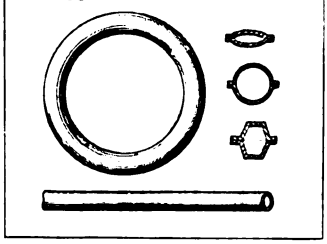

45085

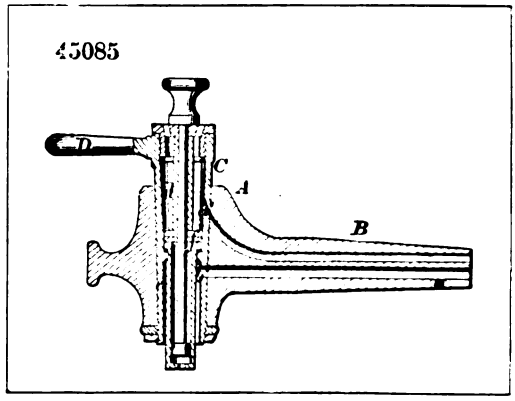

45084

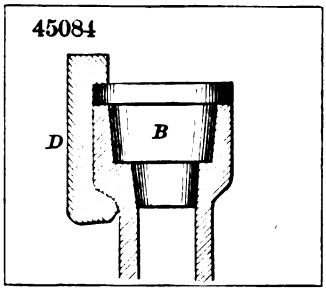

45088

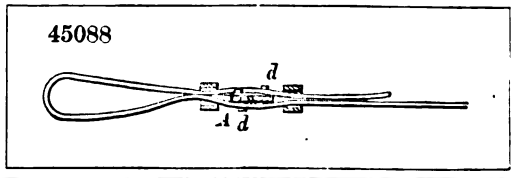

45087

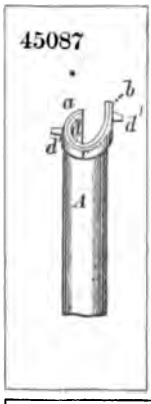

45086

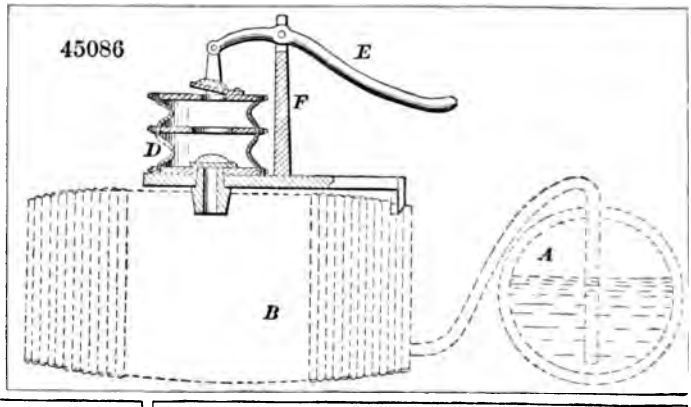

45089

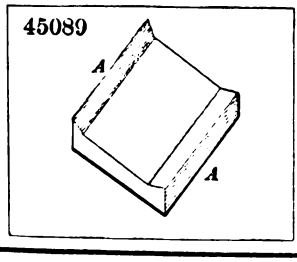

45091

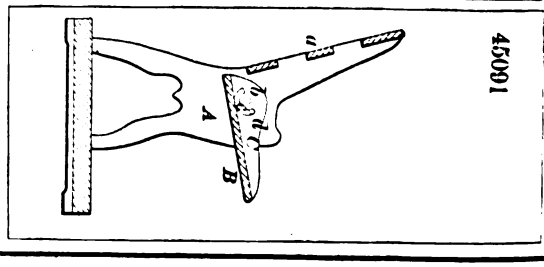

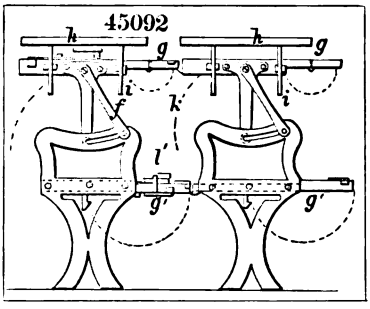
45092
h
g
h
g
i
f
k
i
l'
g'
g'

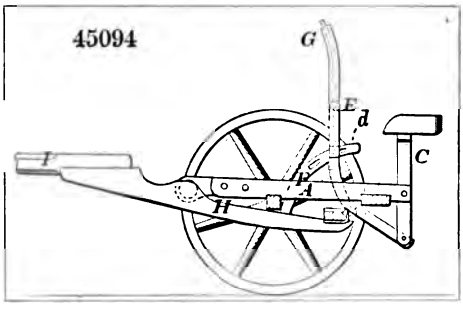
45094
G
E
d
C
F
H

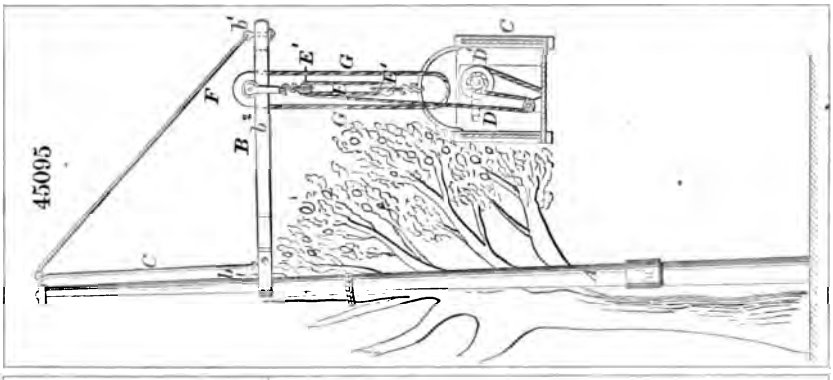
45095
b'
E'
G
C
F
B
b
D
C

45093
F
D
C
G
d
h
H
E
i

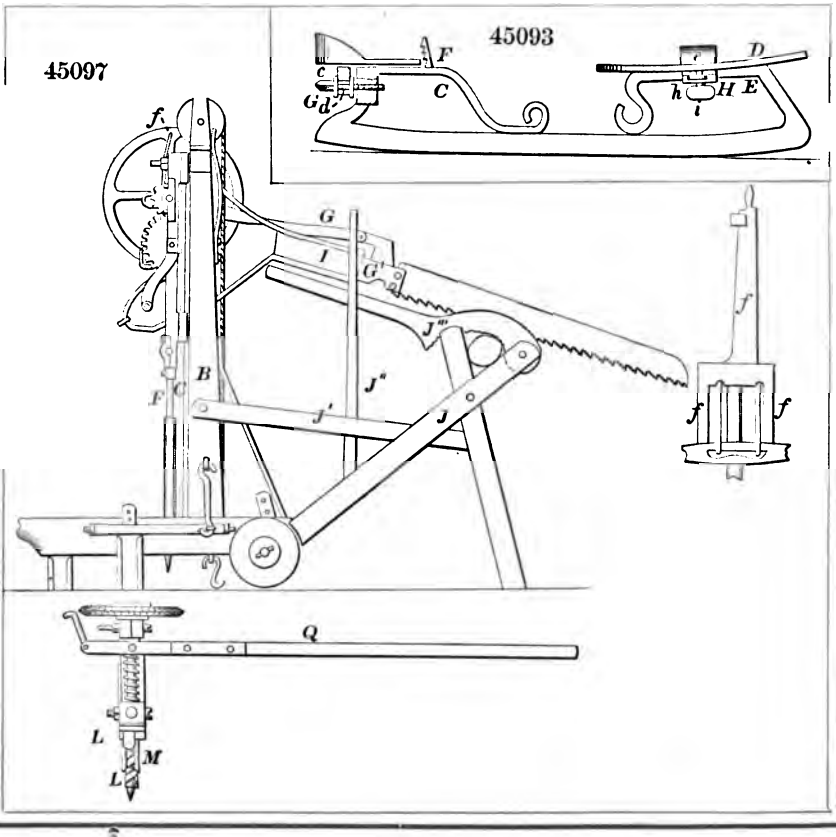
45097
f
G
I
G'
J'''
B
F
C
J''
j'
J
f
f
f
Q
L
M
L

45096

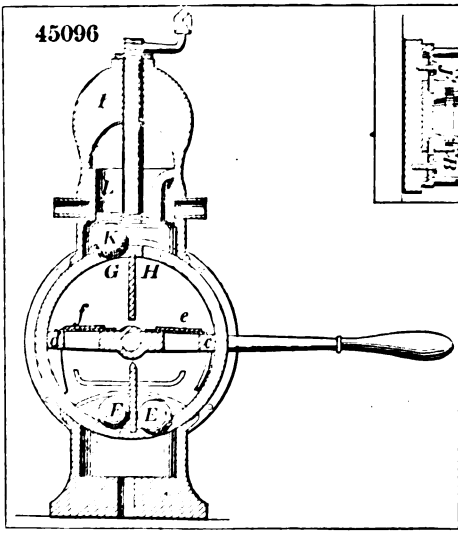

45103

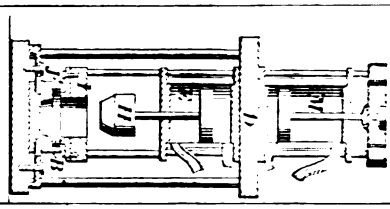

45099

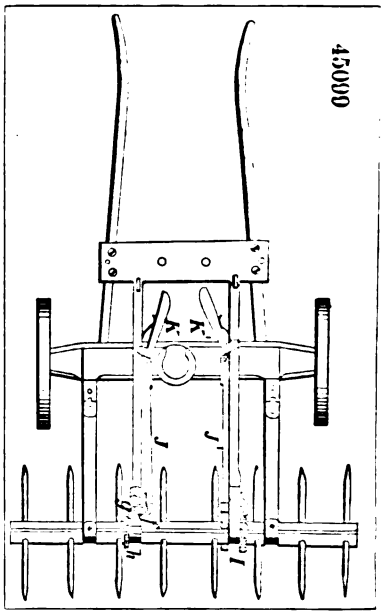

45101

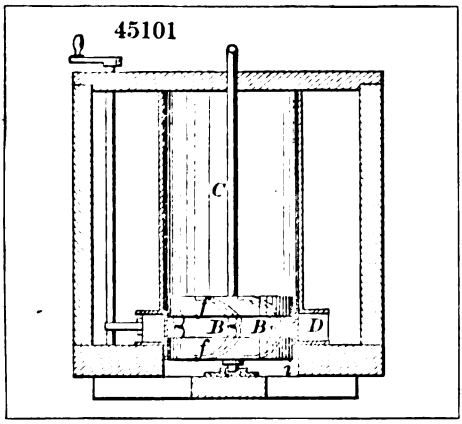

45100

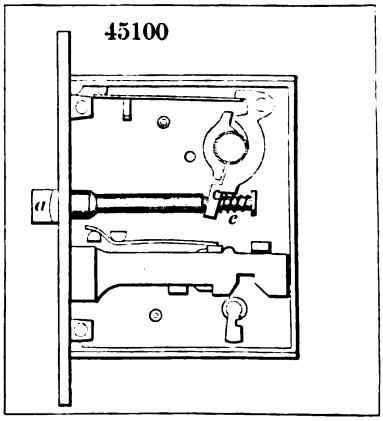

45098

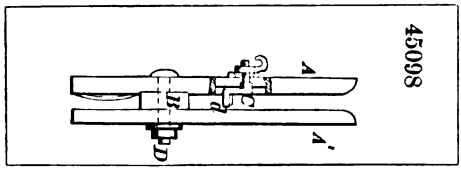

45104

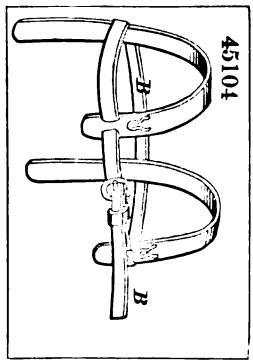

45102

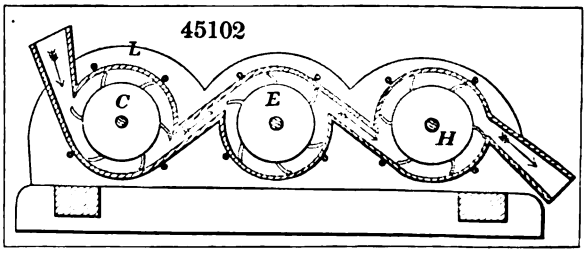

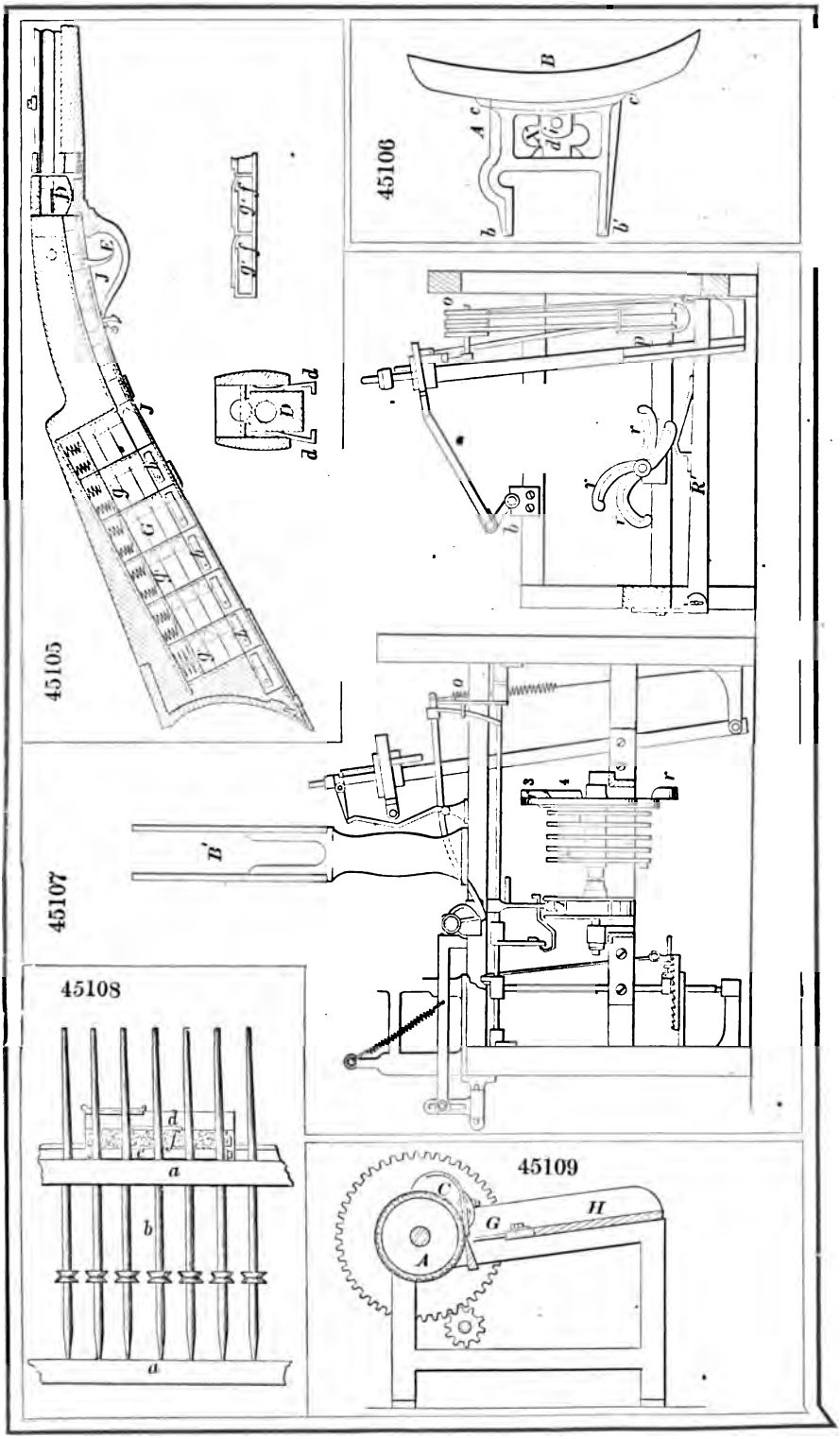
45105
45106
45107
45108
45109

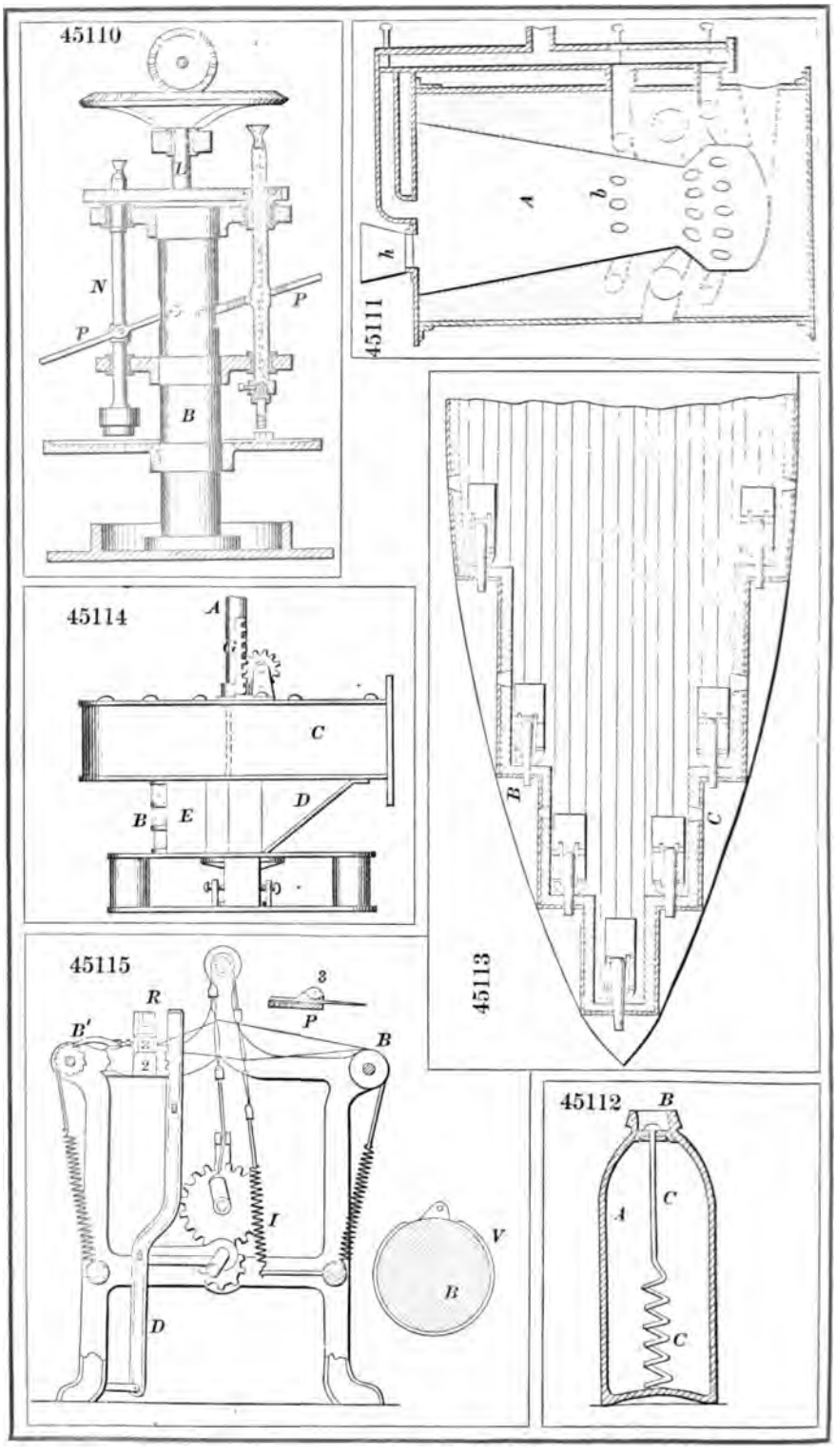
45110
U
N
P
P
B
45111
A
b
h
45113
B
C
45114
A
C
B
E
D
45115
R
B'
3
P
B
I
V
B
D
45112
B
A
C
C

45116

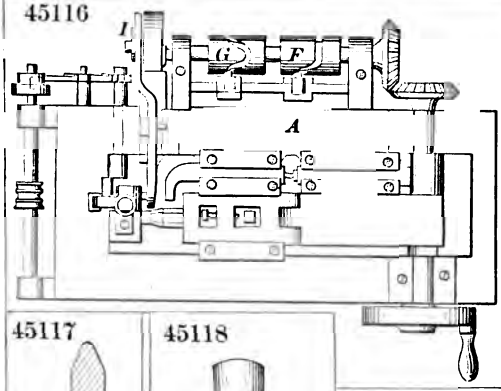

45122

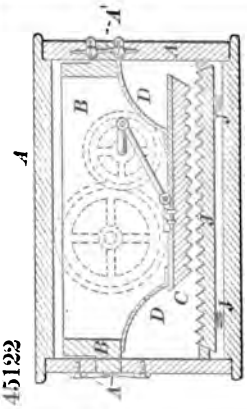

45117

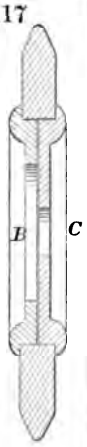

45118

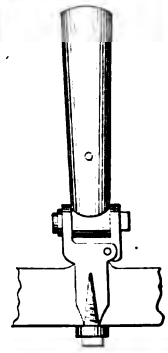

45119

45121

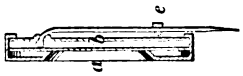

45123

45120

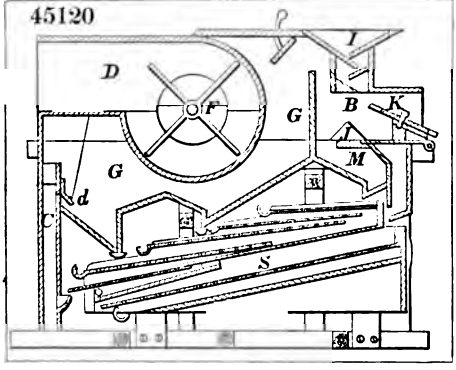

45124

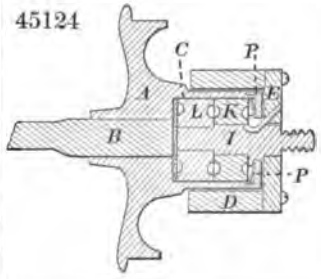

45125

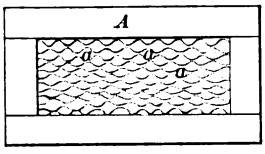

45126

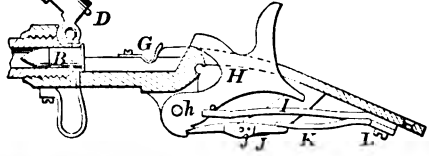

45127

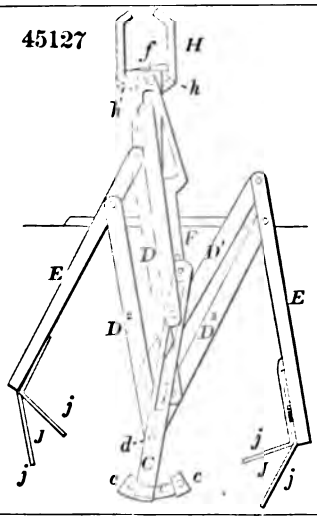

45131

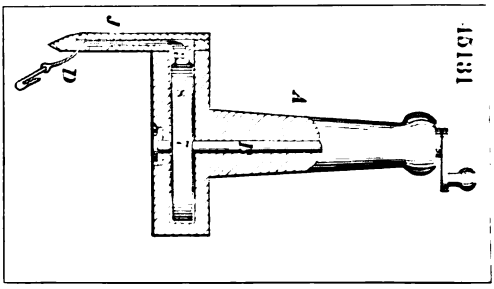

45129

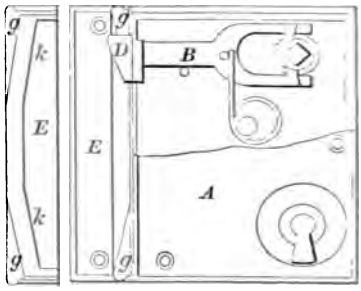

45130

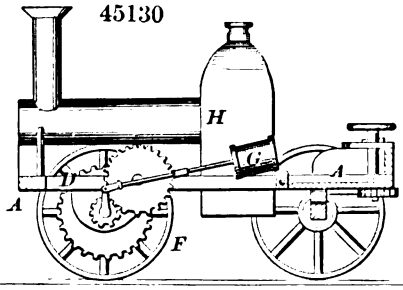

45133

45128

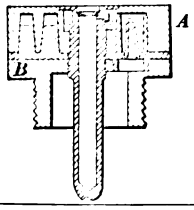

45132

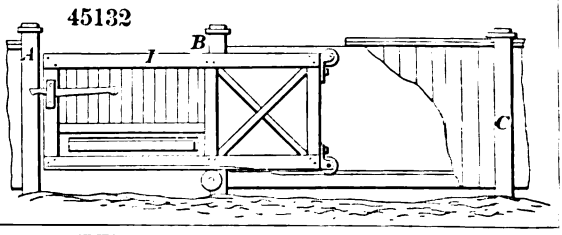

45135

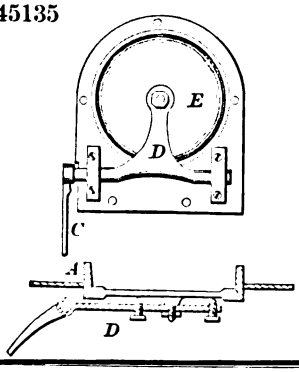

45134

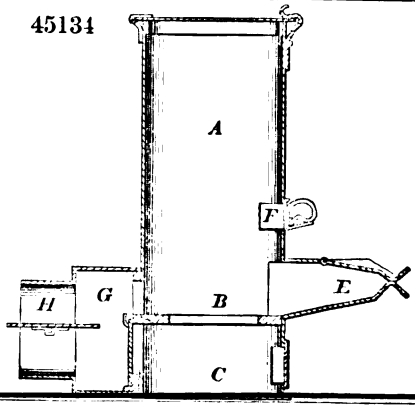

45137

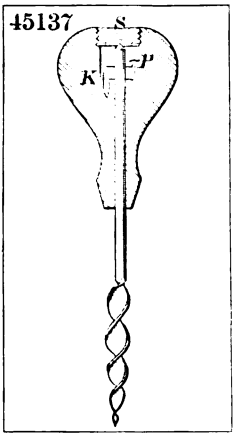

45138

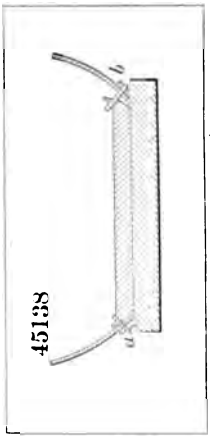

45139

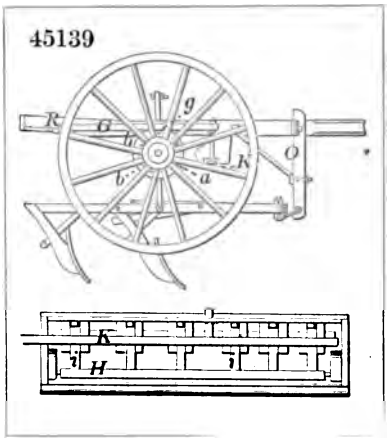

45142

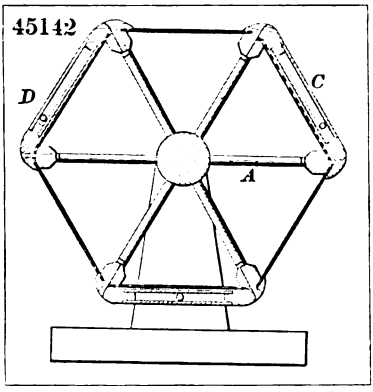

45143

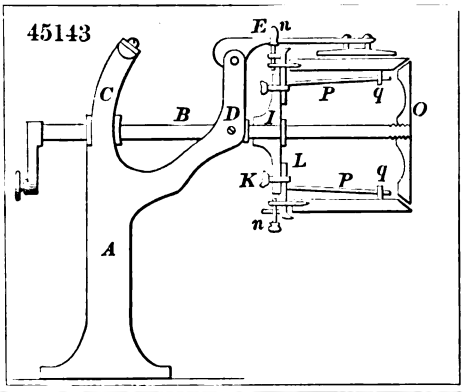

45140

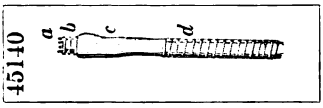

45144

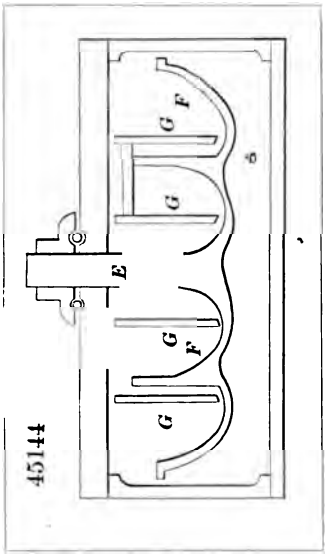

45145

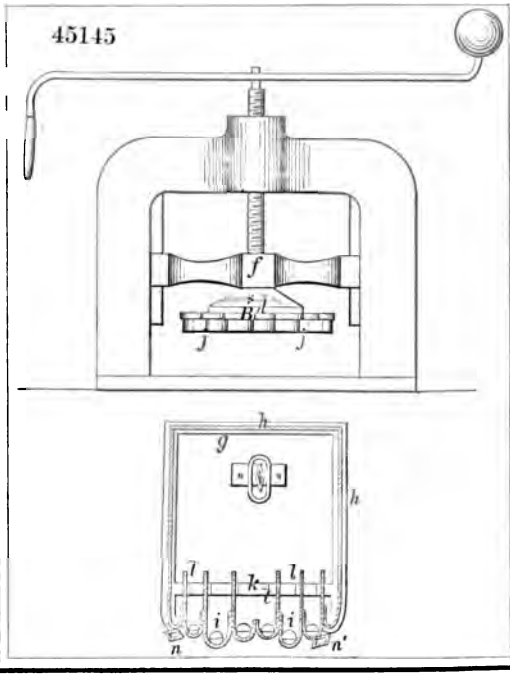

45146

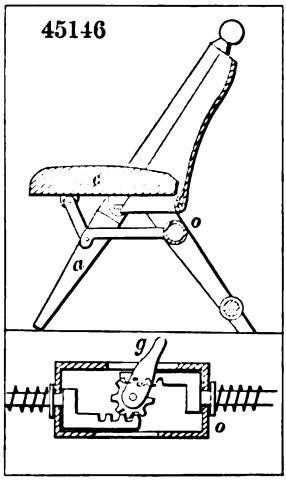

45148

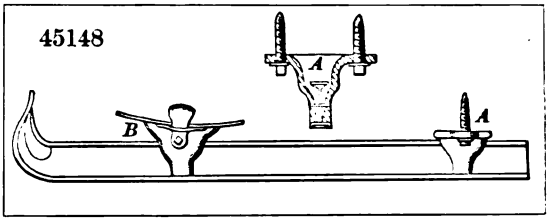

45149

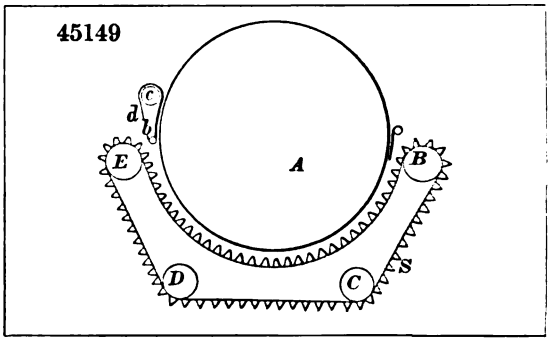

45147

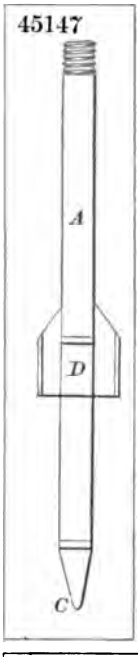

45151

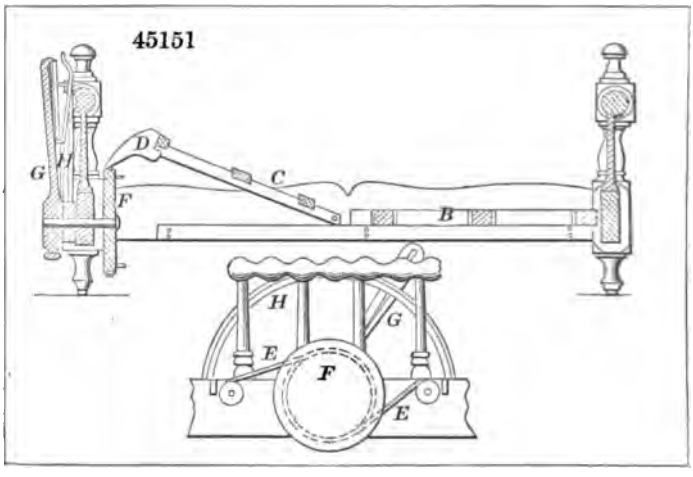

45150

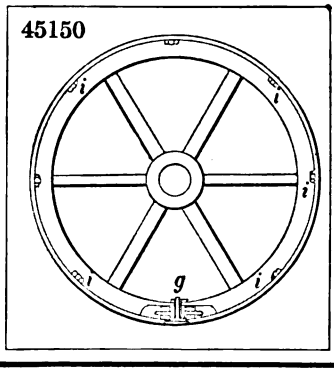

45152

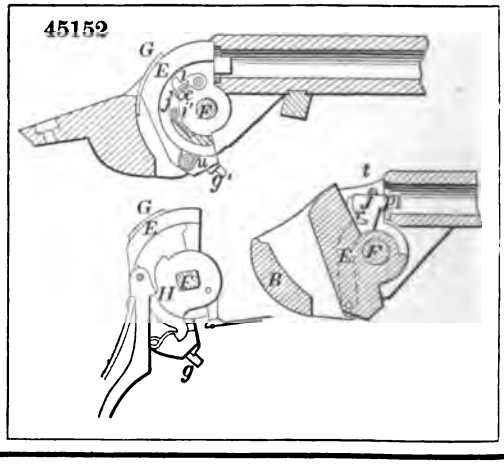

45153

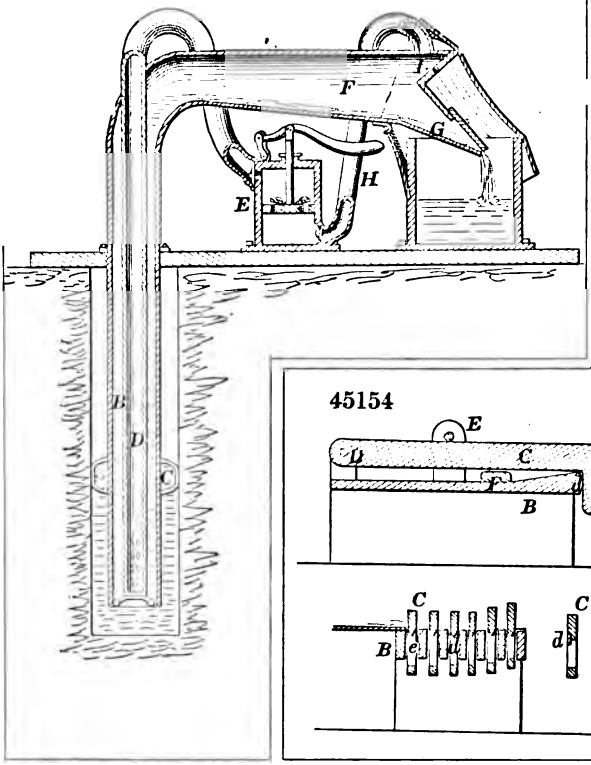

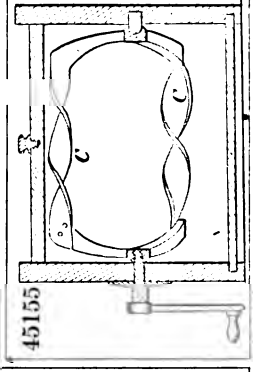

45154

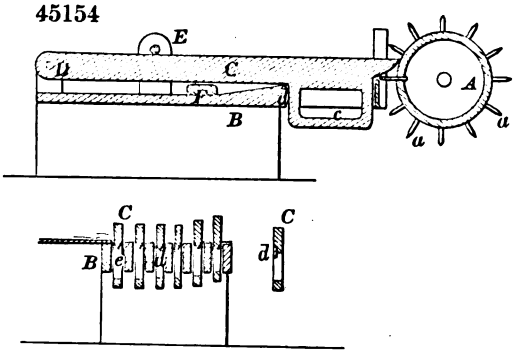

45157

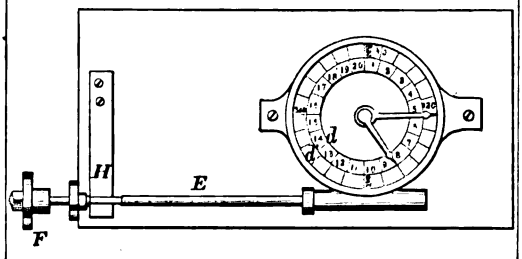

45156

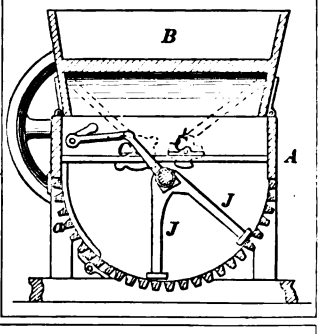

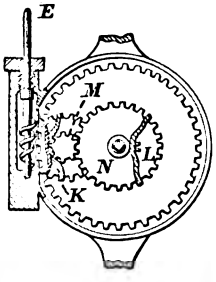

45158

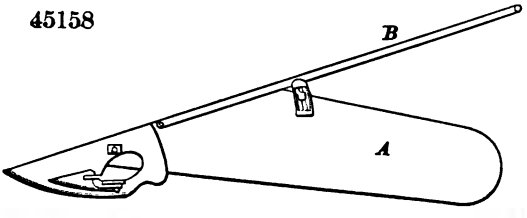

45159

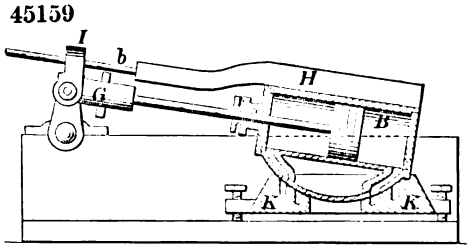

45165

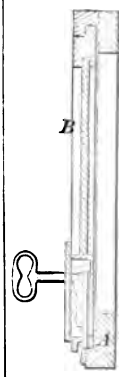

45166

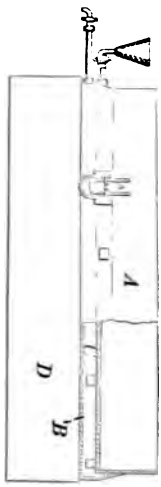

45162

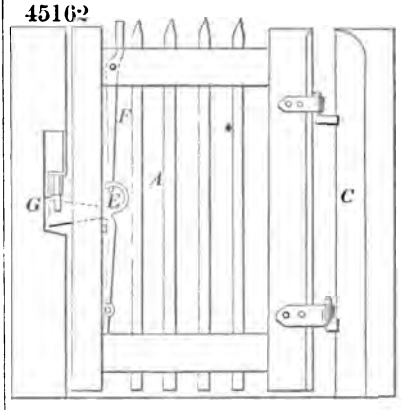

45164

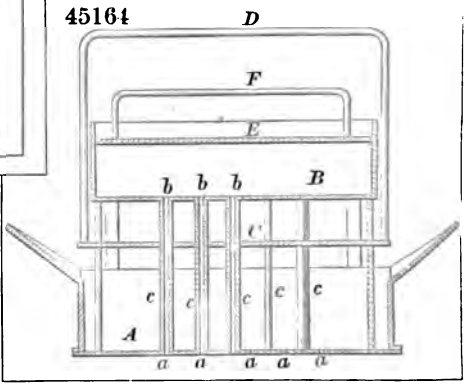

45167

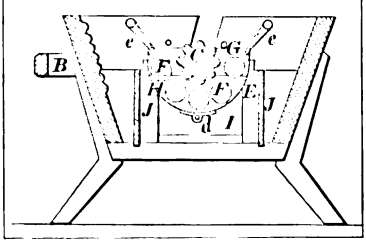

45163

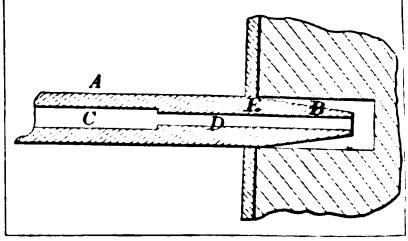

45168

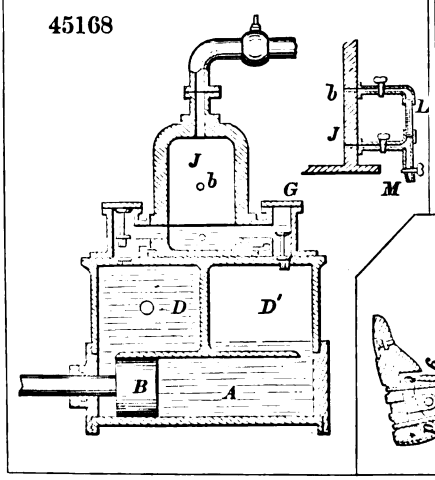

45169

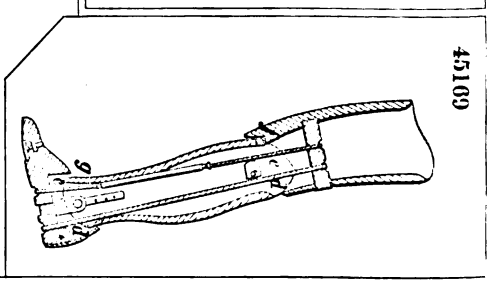

45170

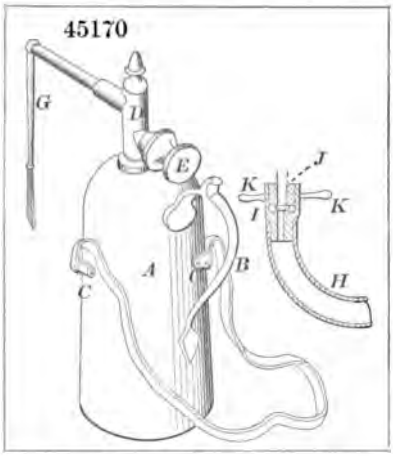

45171

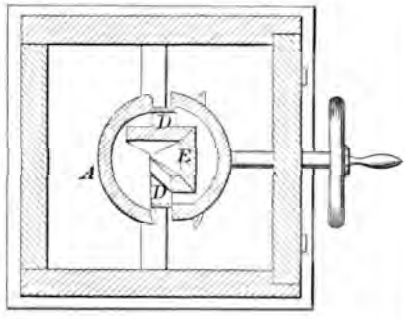

45172

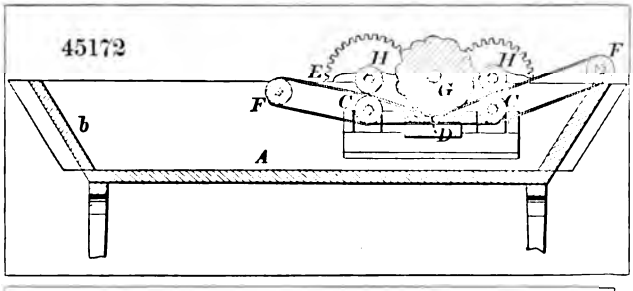

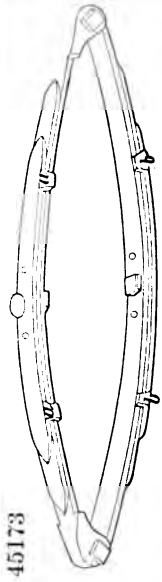

45173

45174

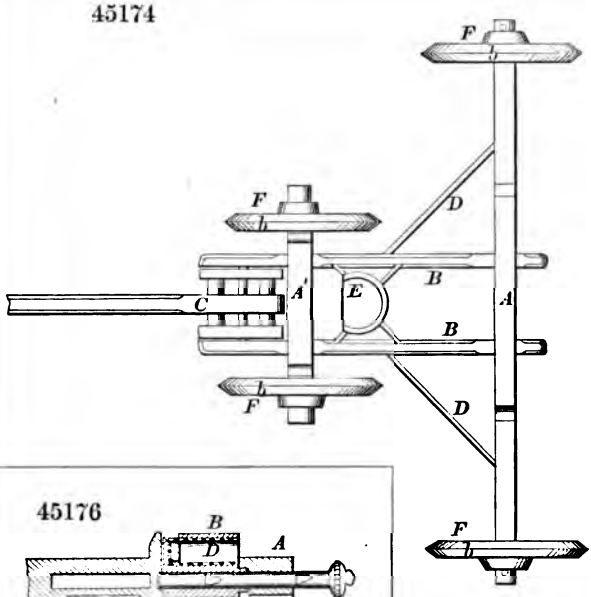

45175

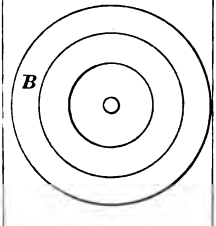

45176

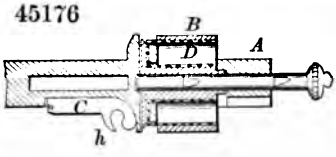

45177

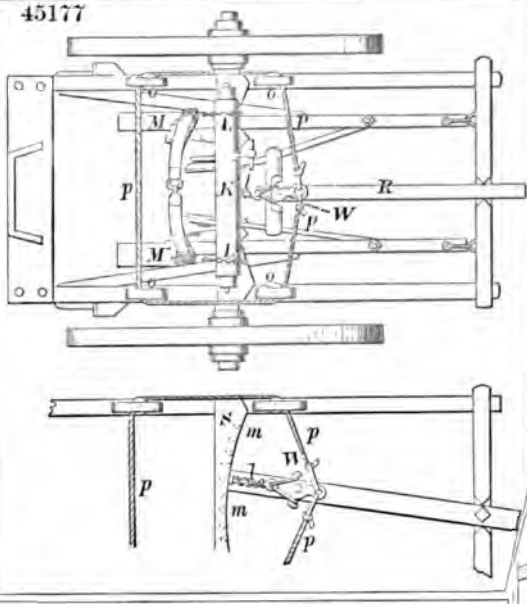

45179

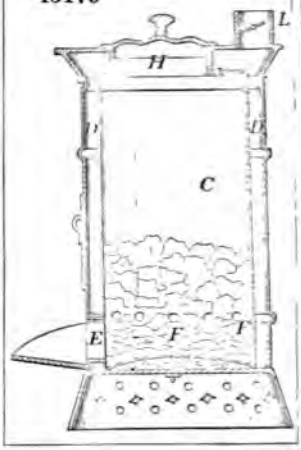

45178

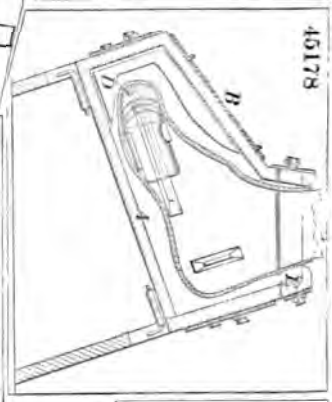

45183

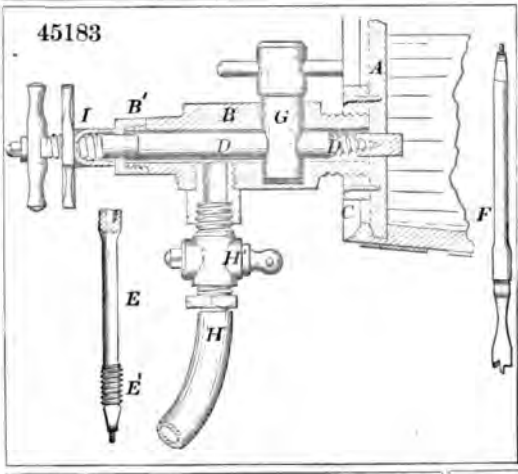

45181

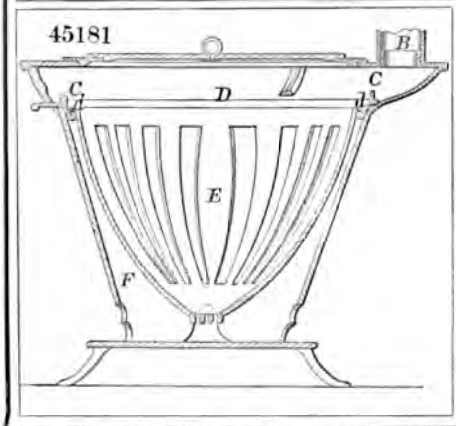

45182

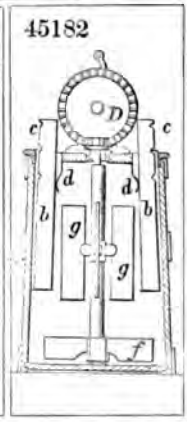

45181

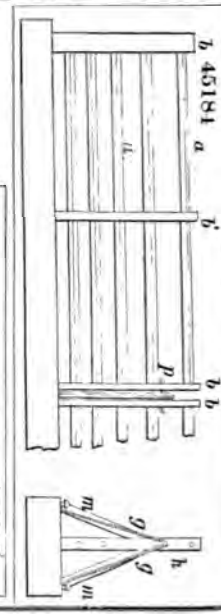

45185

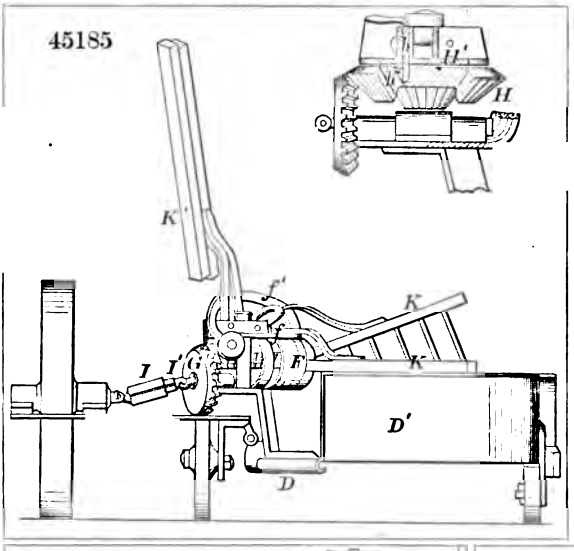

45190

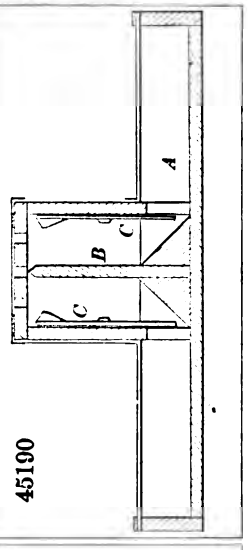

45188

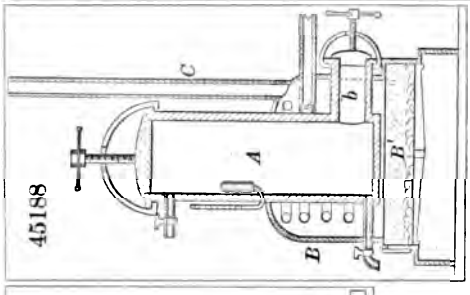

45186

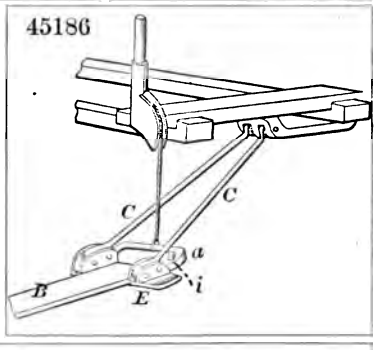

45187

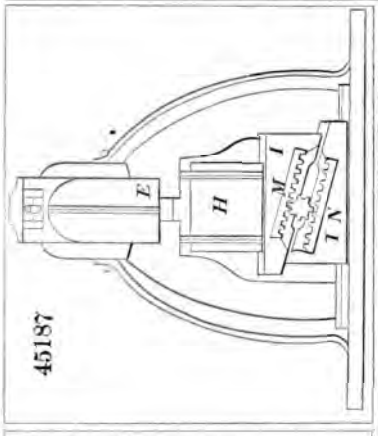

45189

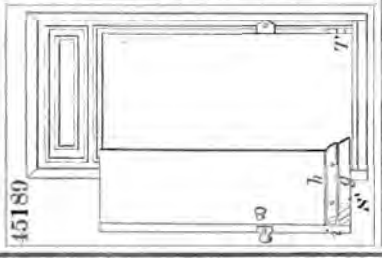

45191

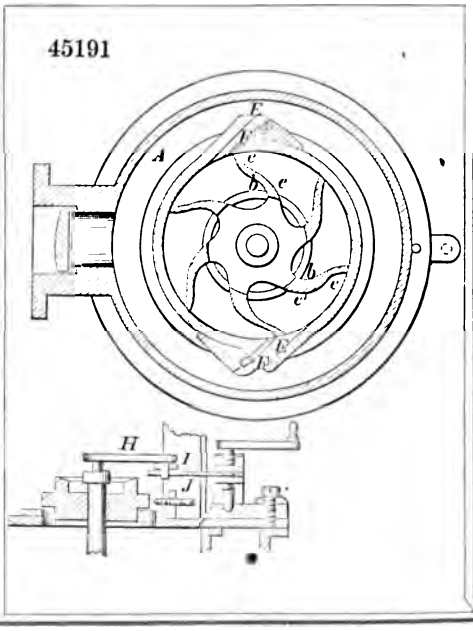

45192

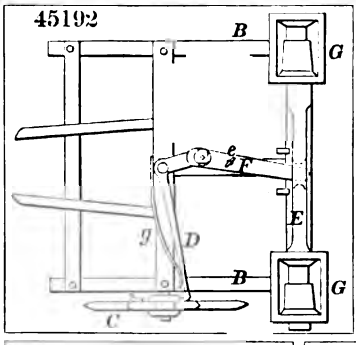

45193

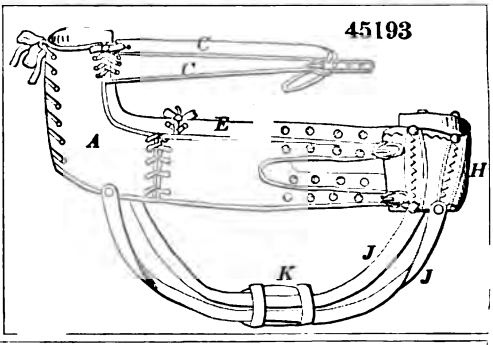

45196

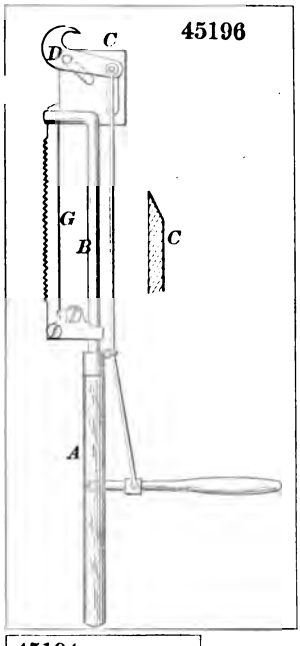

45195

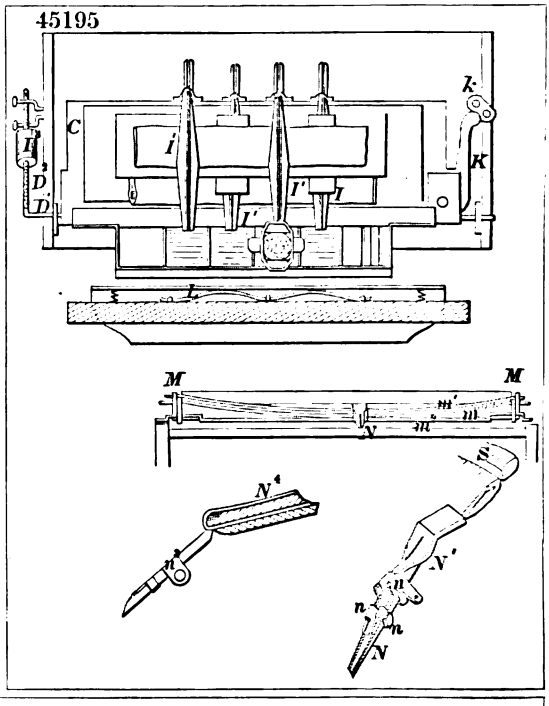

45194

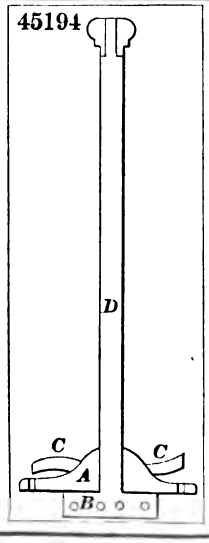

45197

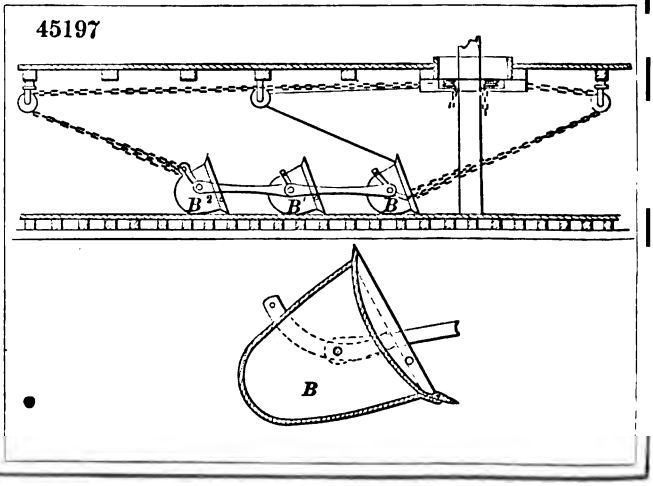

45198

45202

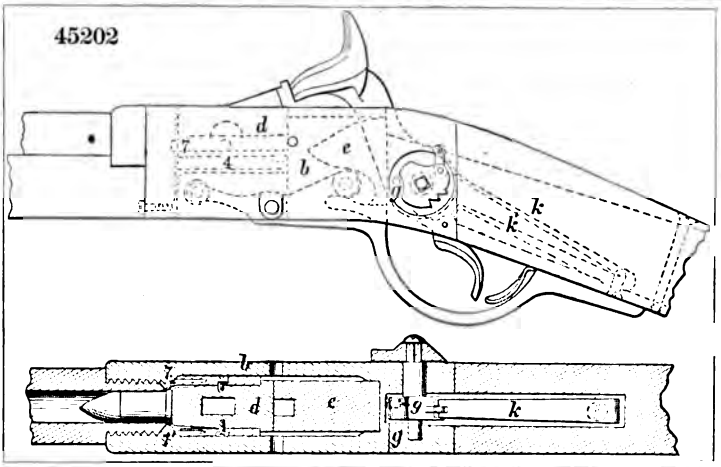

45200

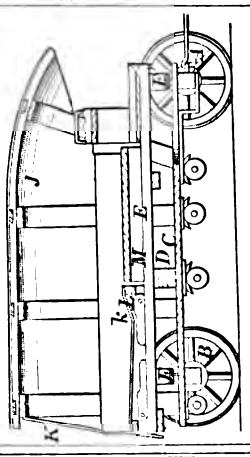

45203

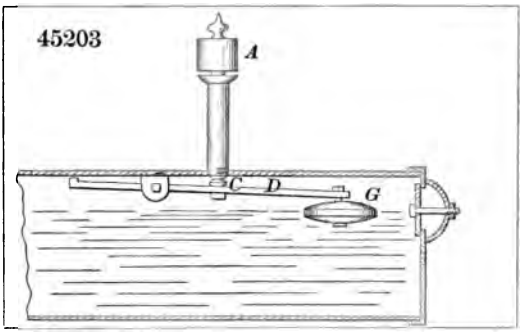

45201

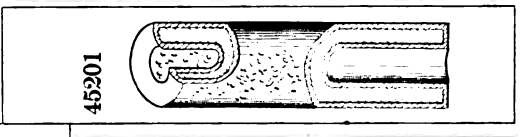

45199

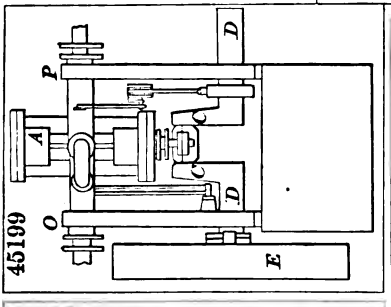

45205

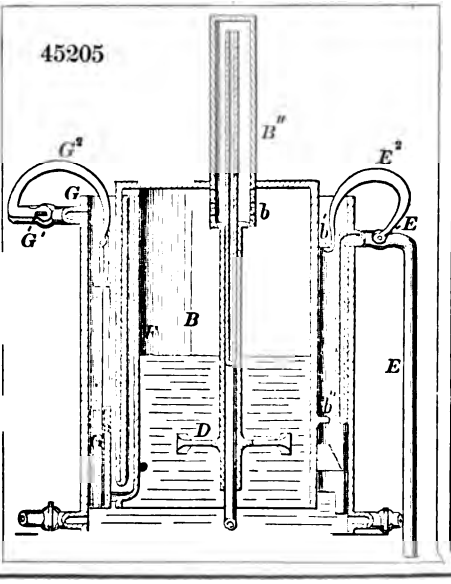

45204

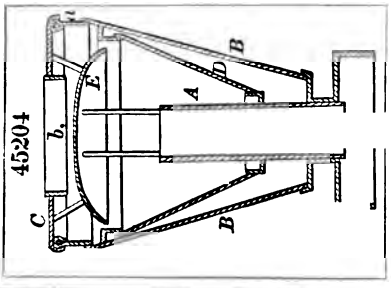

45206

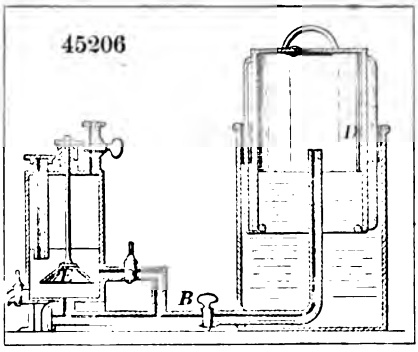

45213

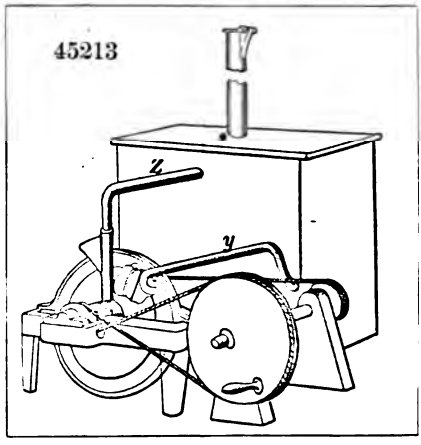

45207

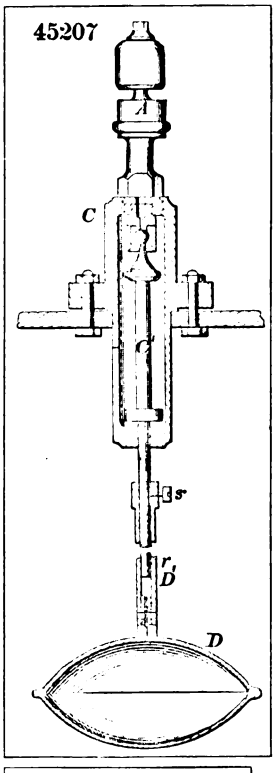

45208

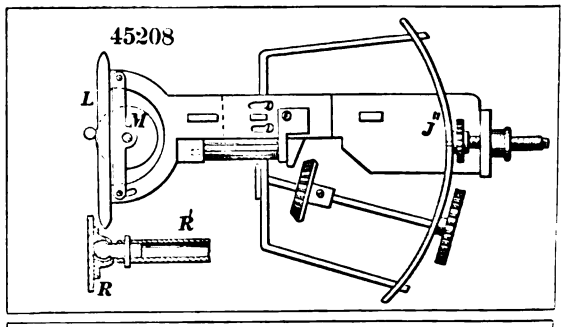

45214

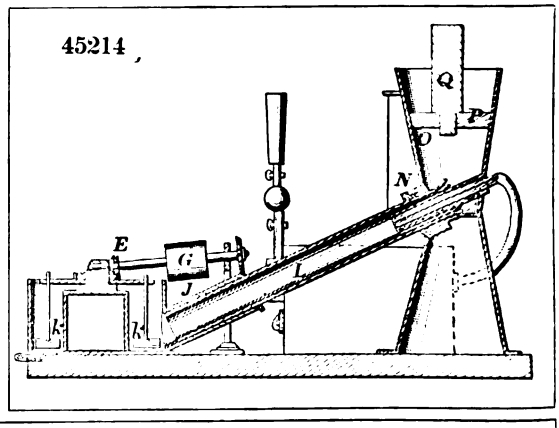

45209

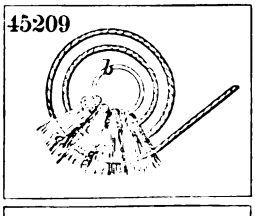

45215

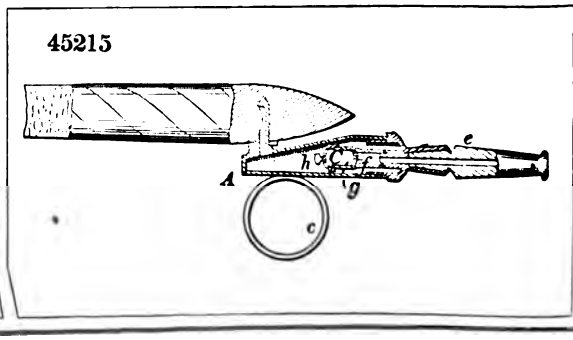

45210

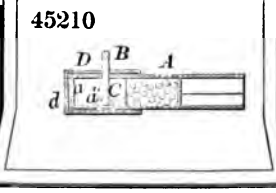

45216

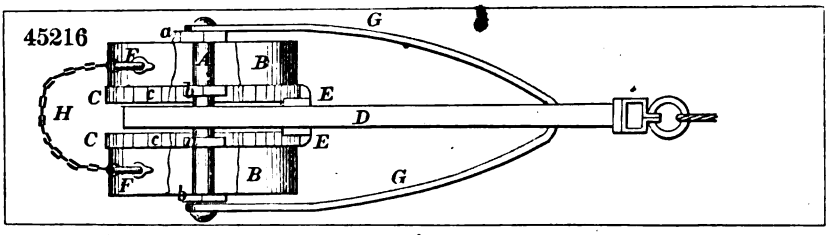

45217

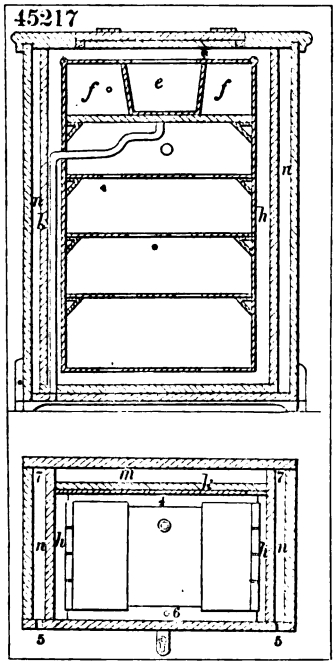

45220

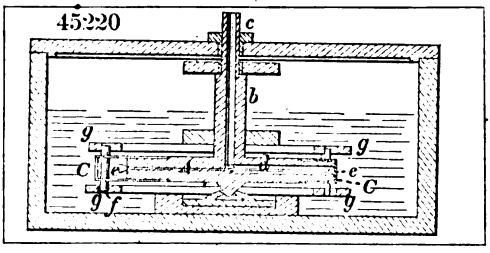

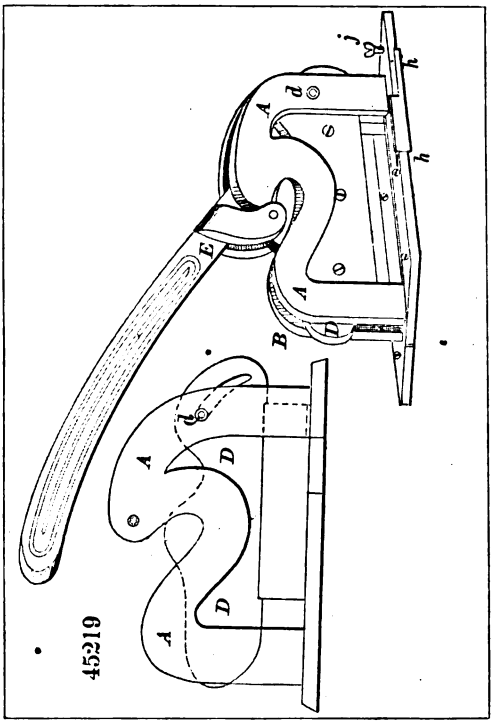

45219

45218

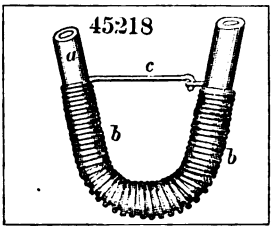

45221

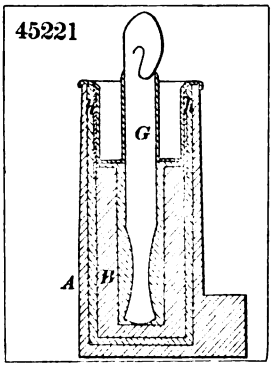

45222

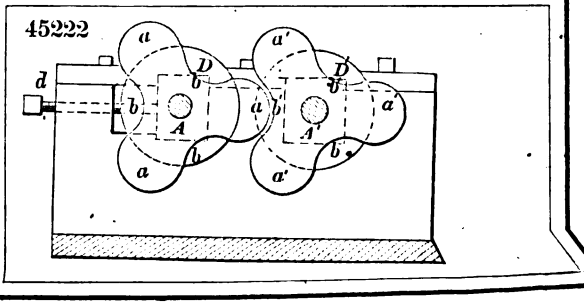

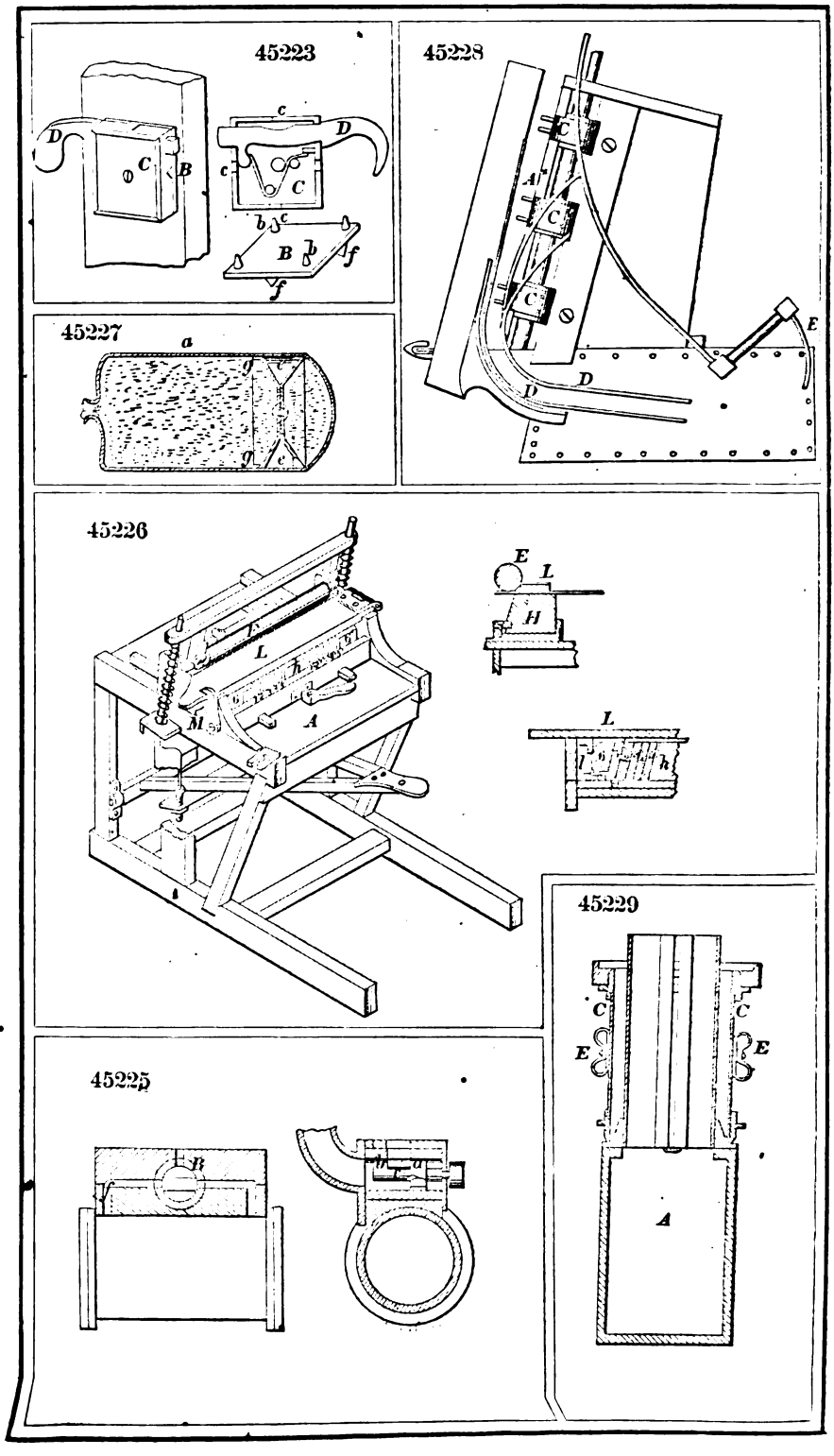
45223
45228
45227
45226
45229
45225

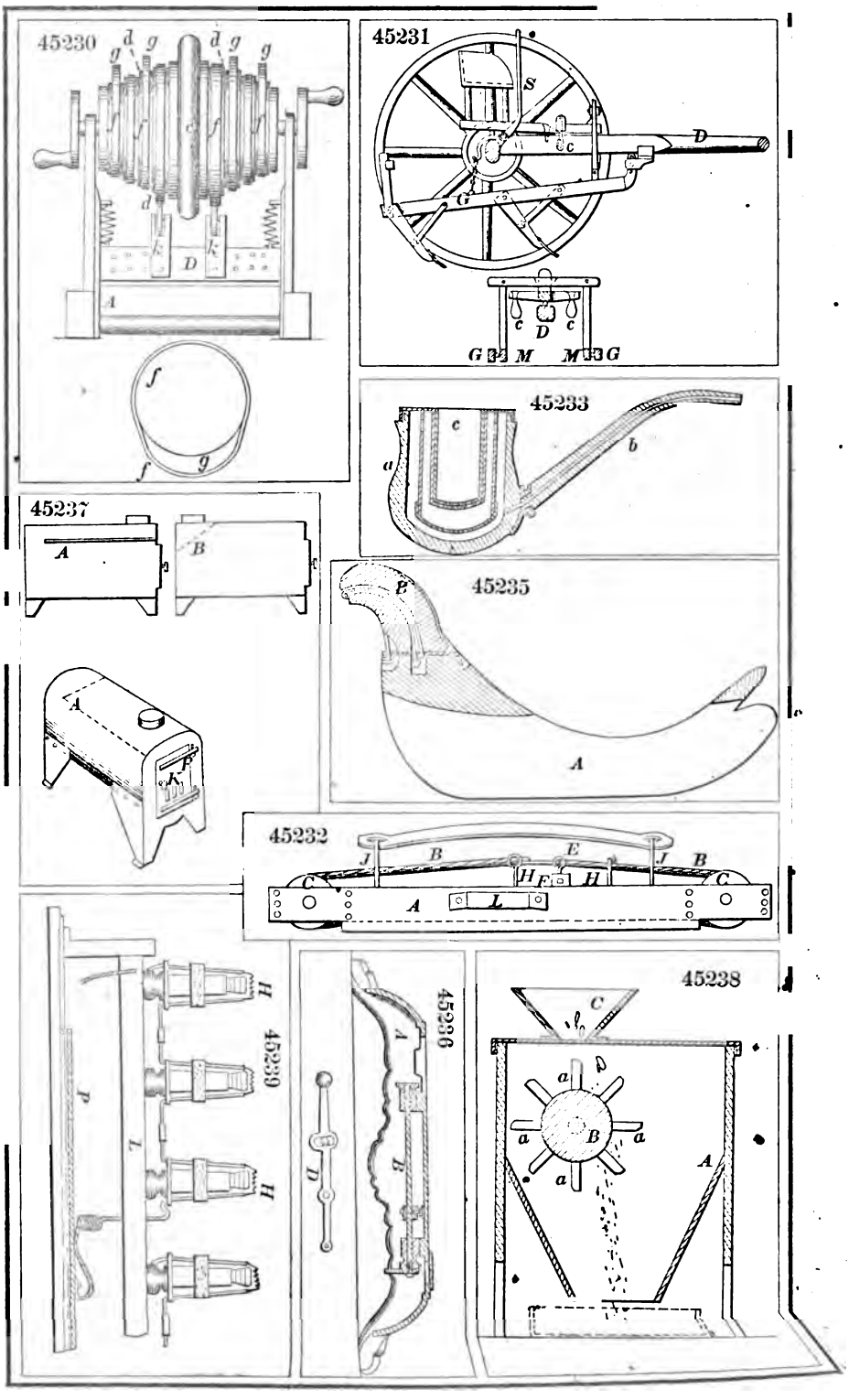
45230
45231
45233
45237
45235
45232
45238
45236
45239

45240

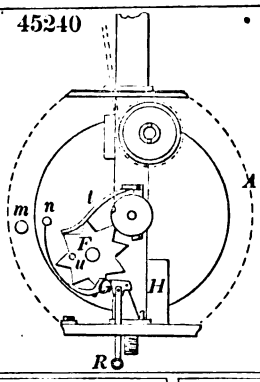

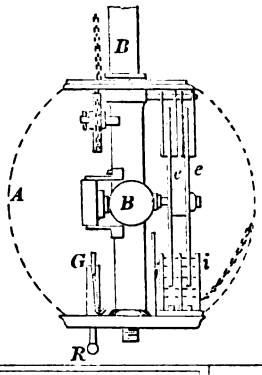

45241

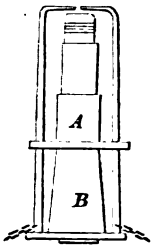

45242

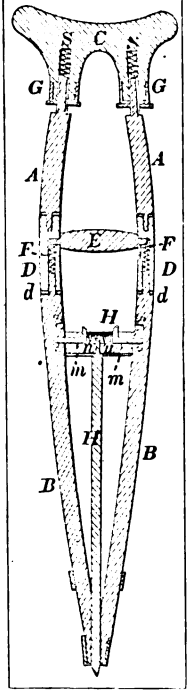

45246

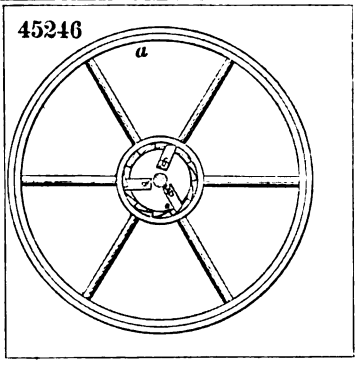

45244

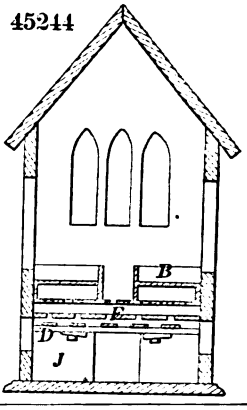

45245

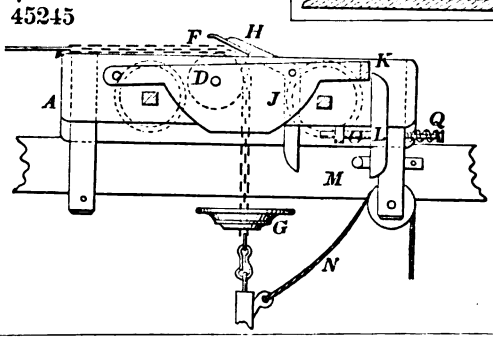

45248

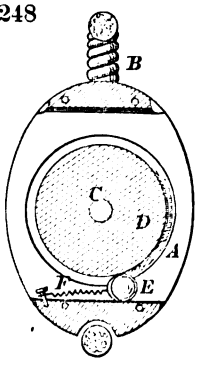

45247

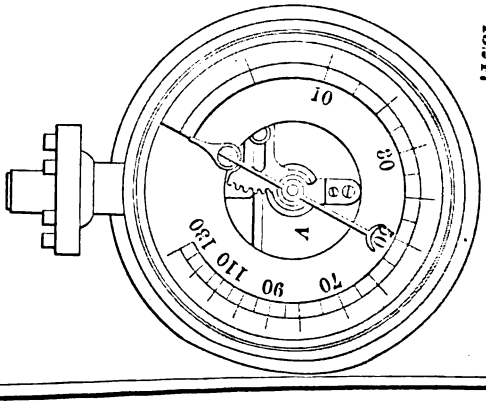

45249

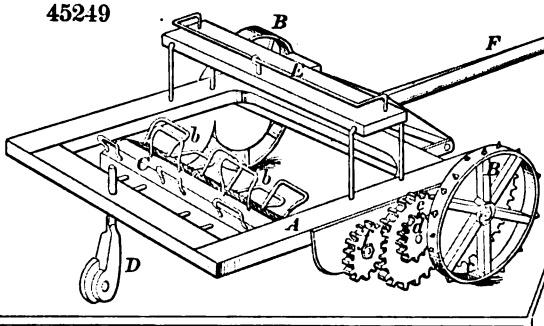

45252

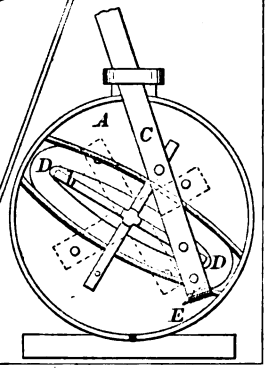

45251

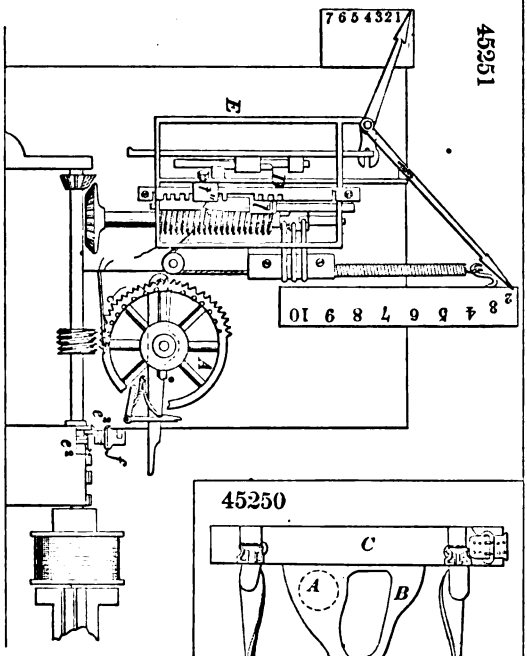

45253

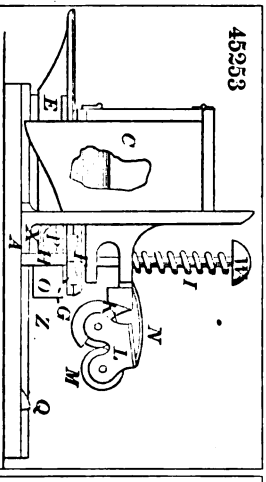

45250

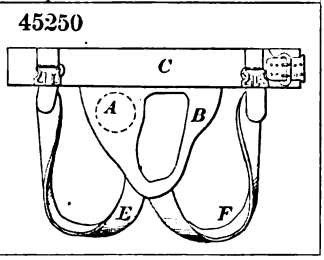

45255

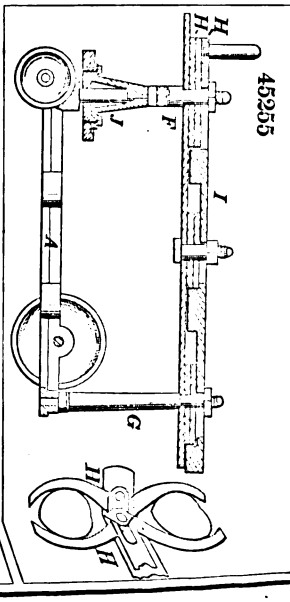

45254

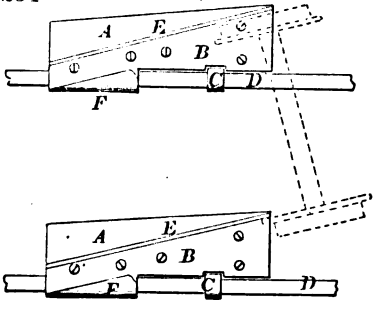

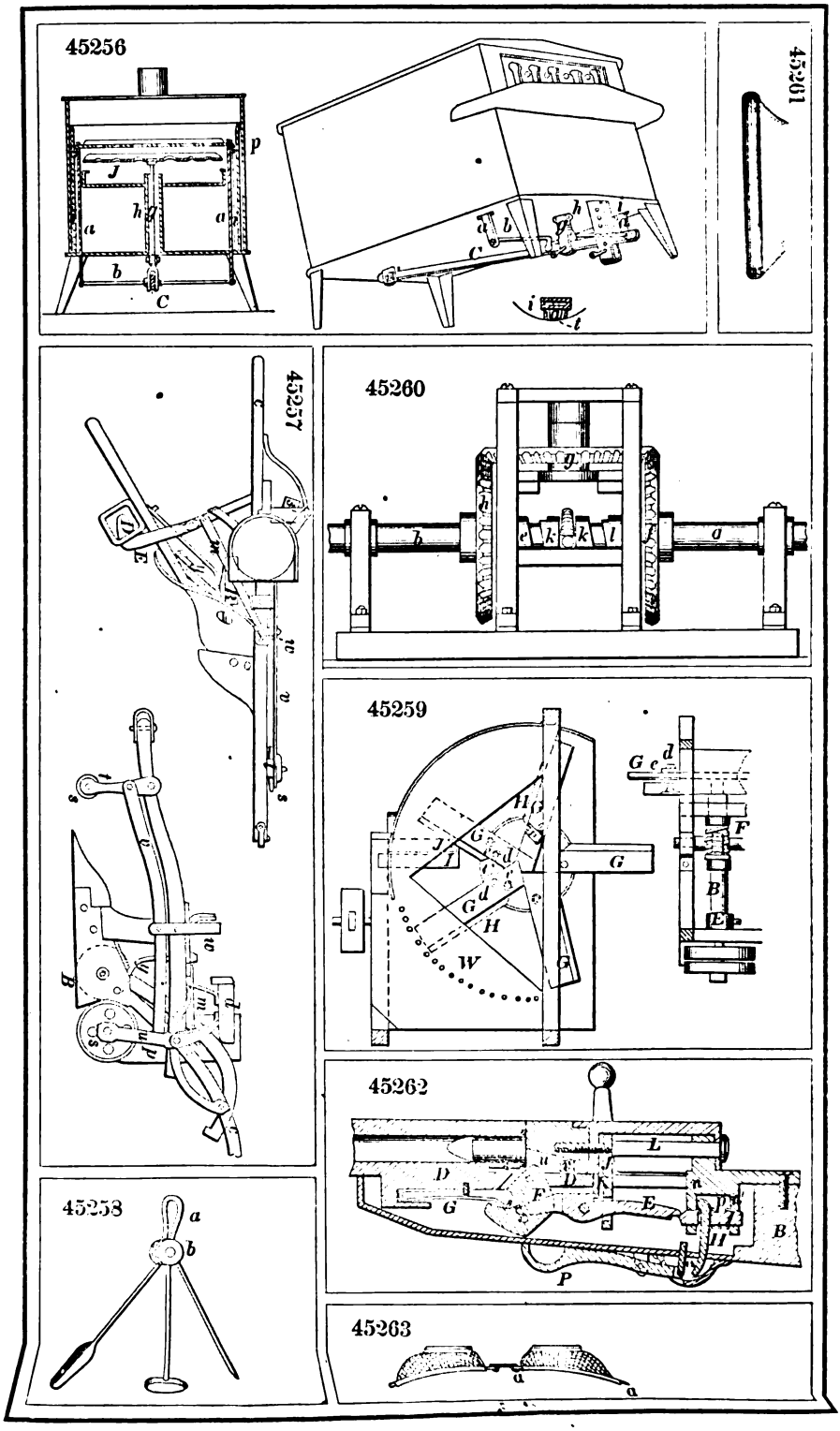
45256
45261
45257
45260
45259
45262
45258
45263

45264

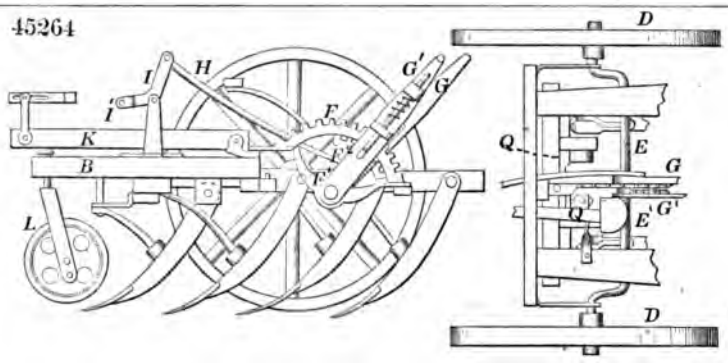

45270

45269

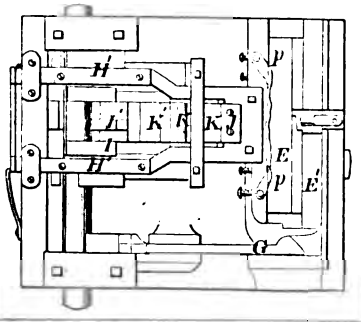

45265

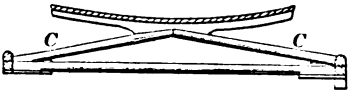

45266

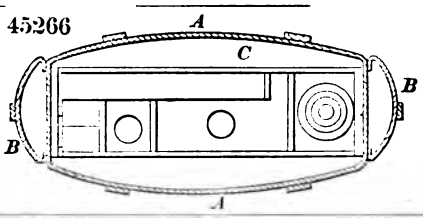

45267

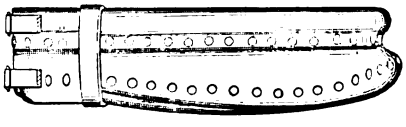

45268

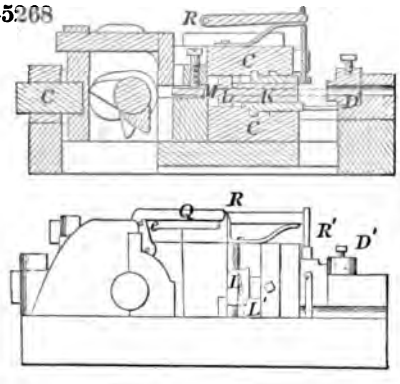

45271

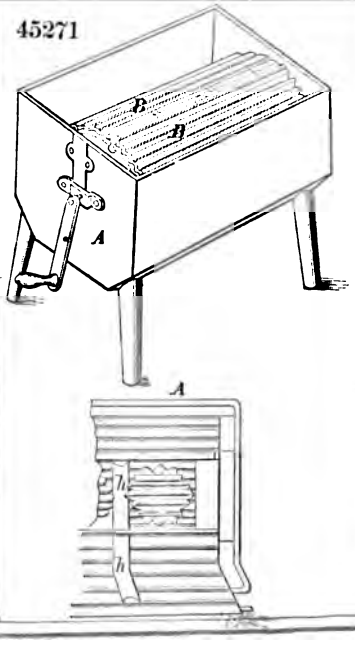

45272

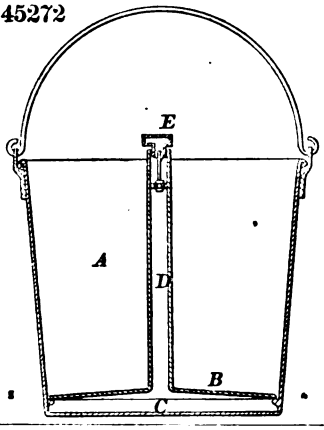

45273

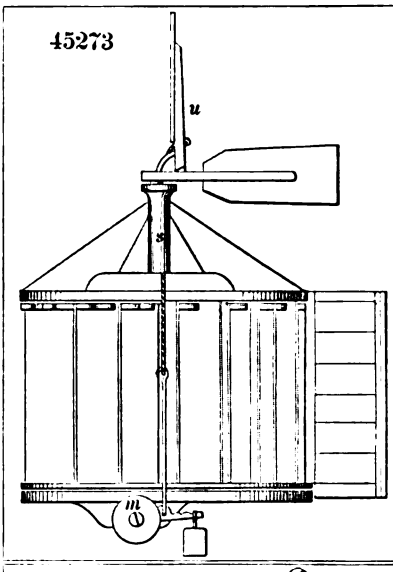

45277

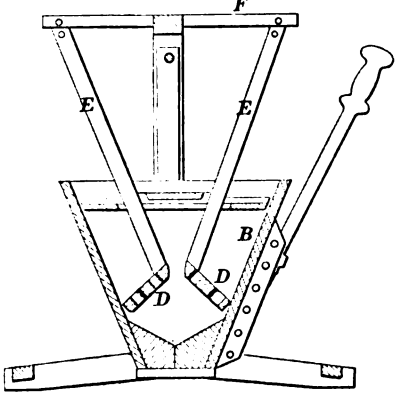

45274

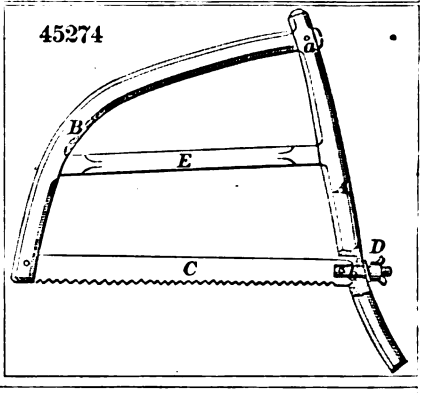

45276

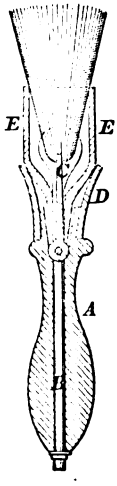

45278

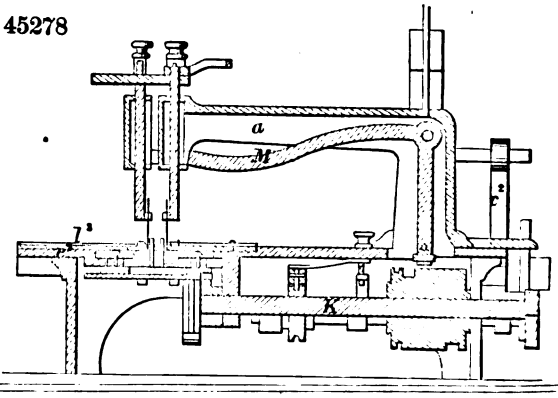

45279

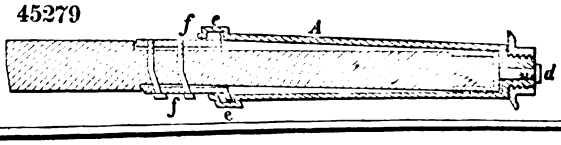

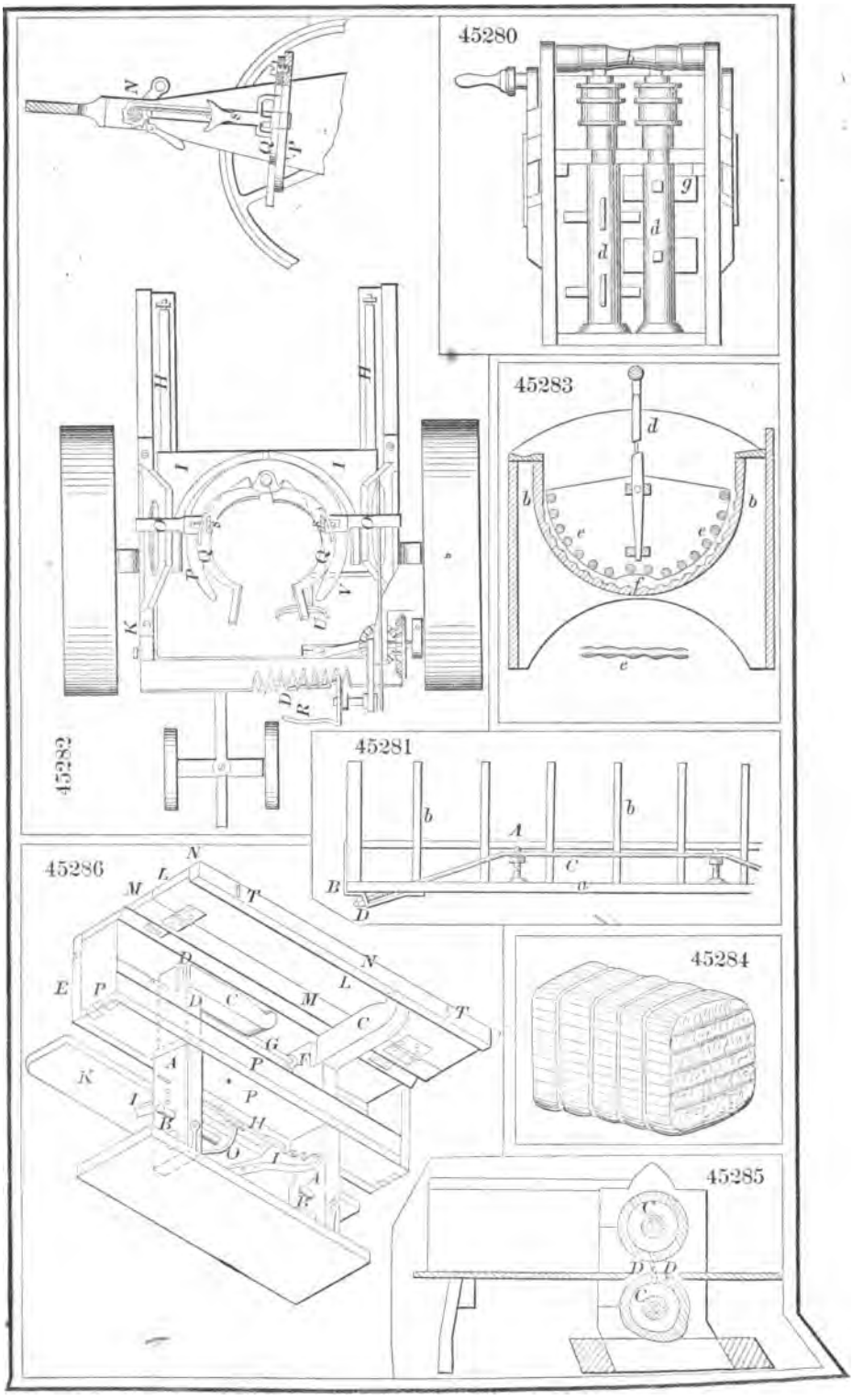
45280
45283
45282
45281
45286
45284
45285

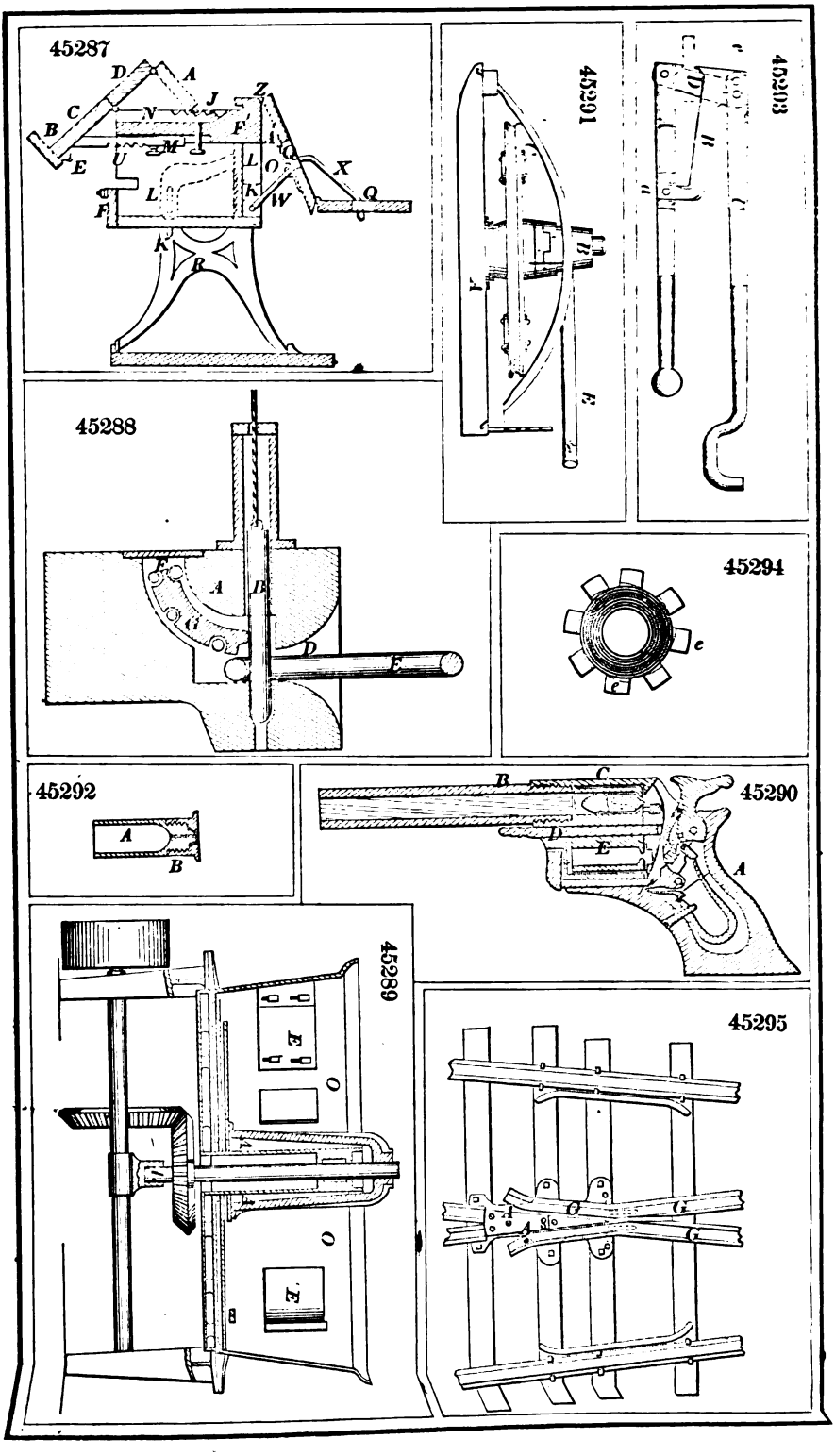
45287
45288
45289
45290
45291
45292
45293
45294
45295

45296

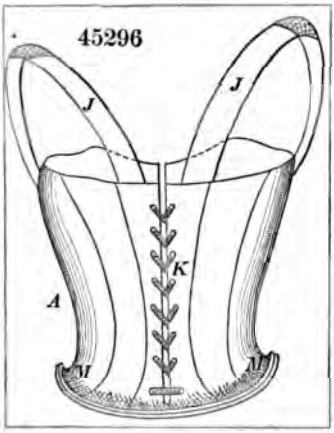

45304

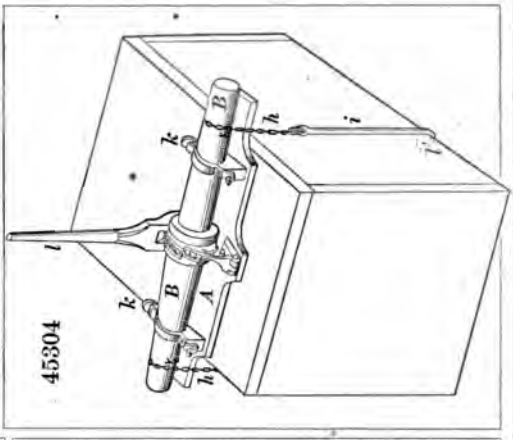

45297

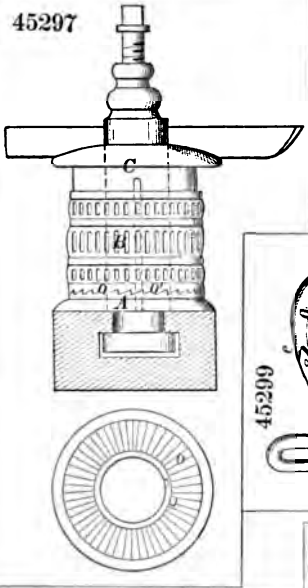

45300

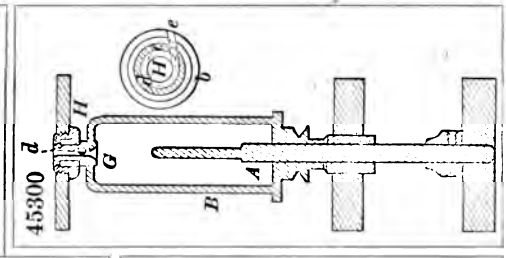

45299

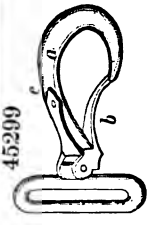

45301

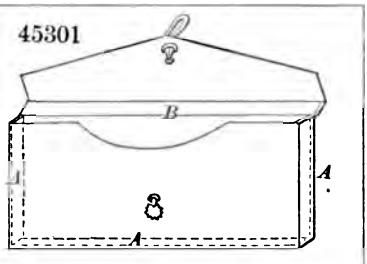

45298

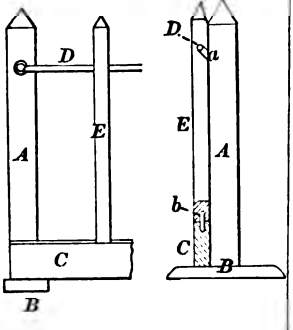

45302

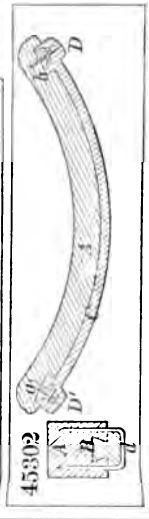

45305

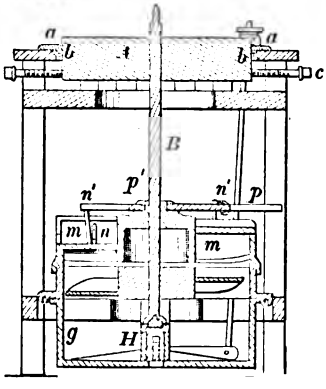

45306

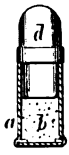

45307

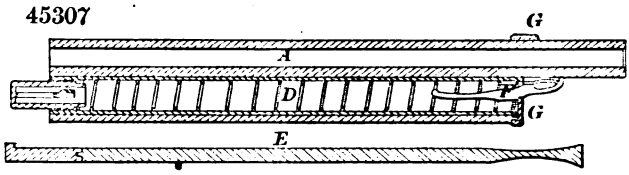

45308

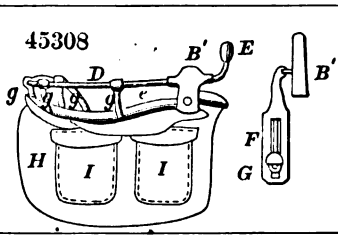

45311

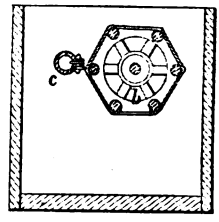

45309

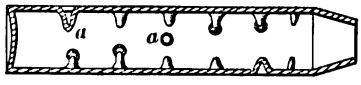

45310

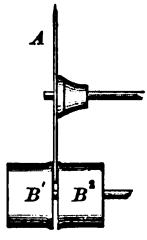

45313

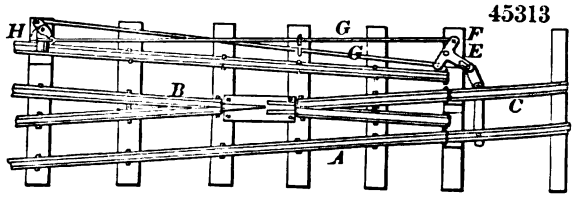

45312

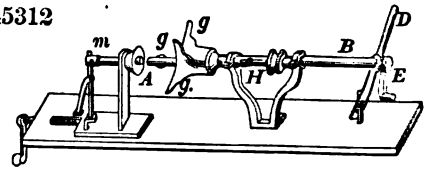

45315

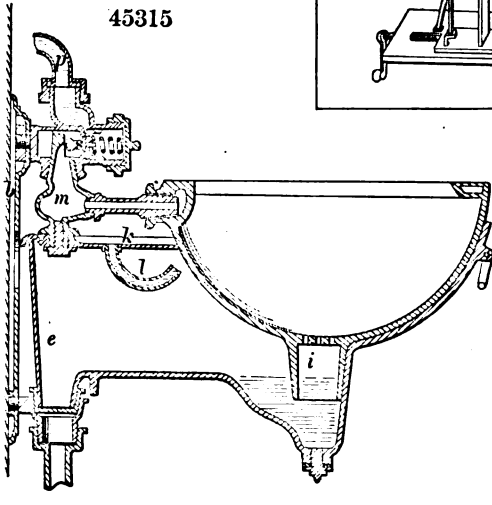

45314

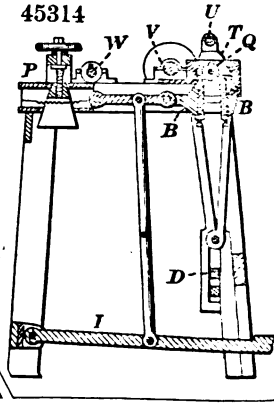

45316

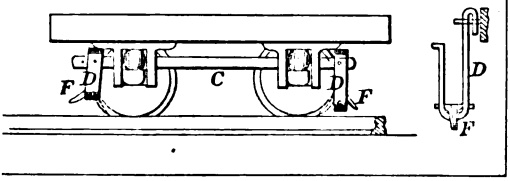

45318

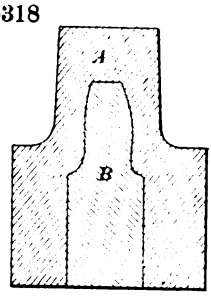

45317

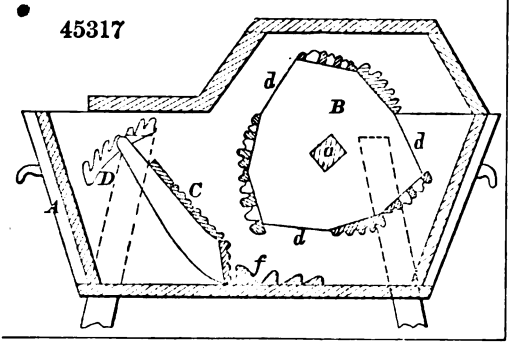

45319

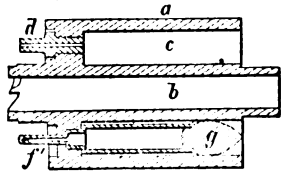

45322

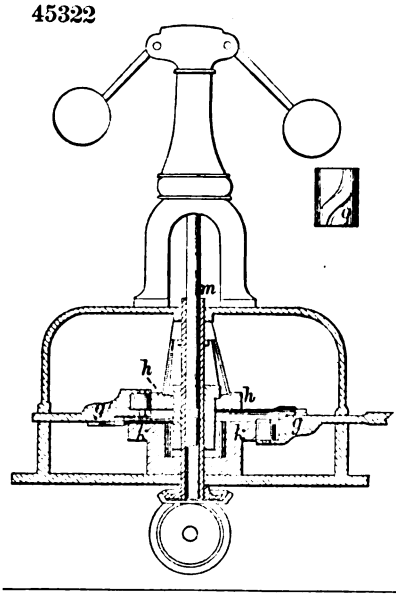

45320

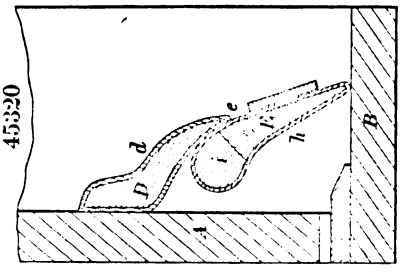

45323

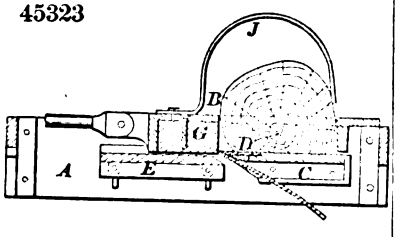

45324

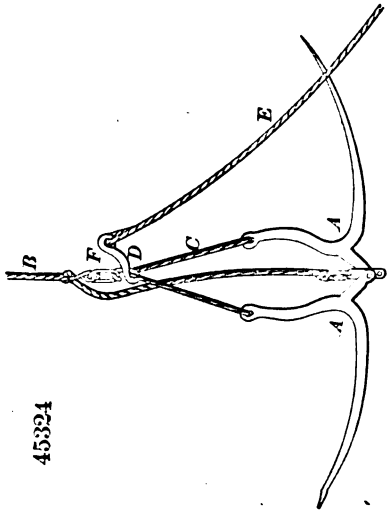

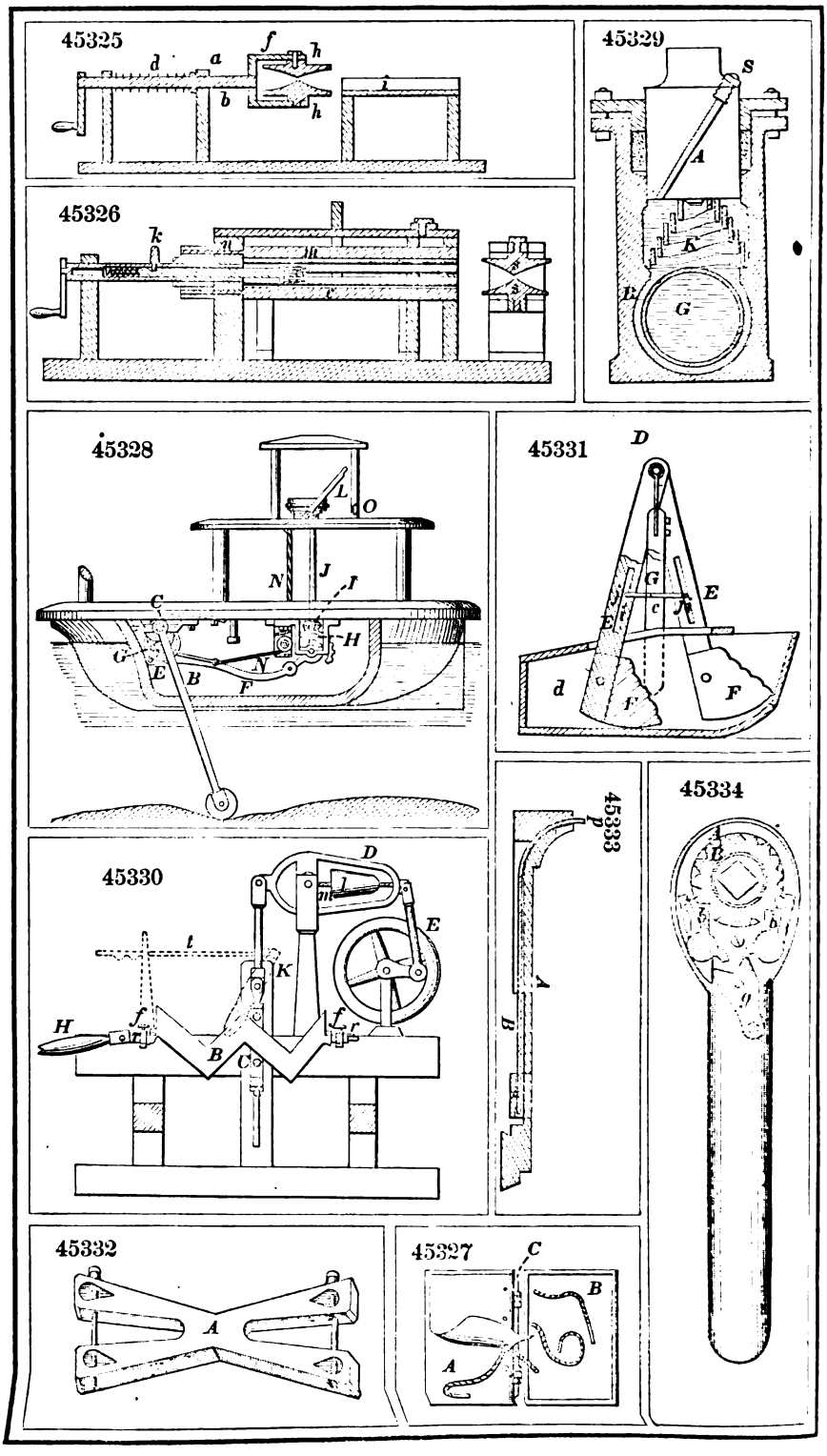
45325
45326
45329
45328
45331
45330
45333
45334
45332
45327

45335

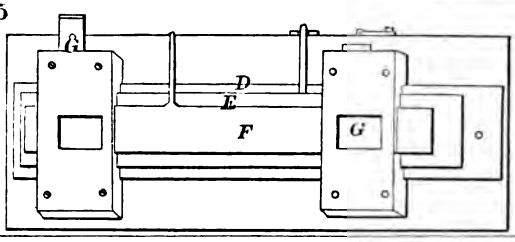

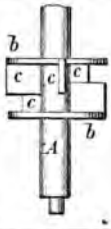

45336

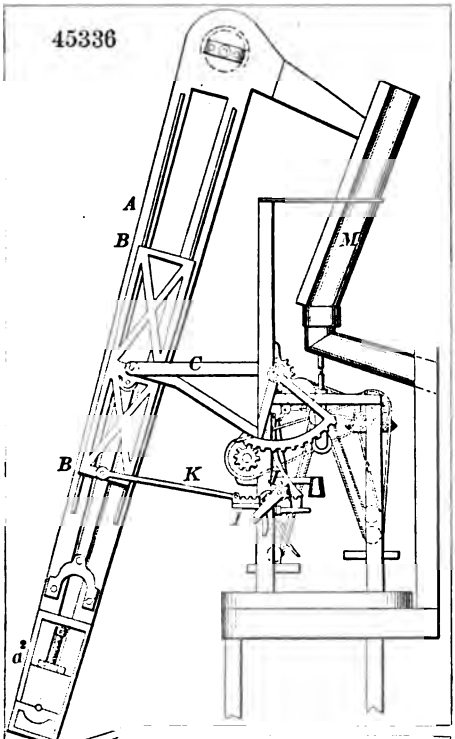

45338

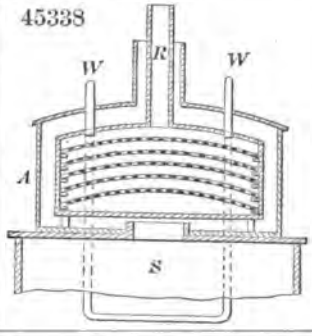

45337

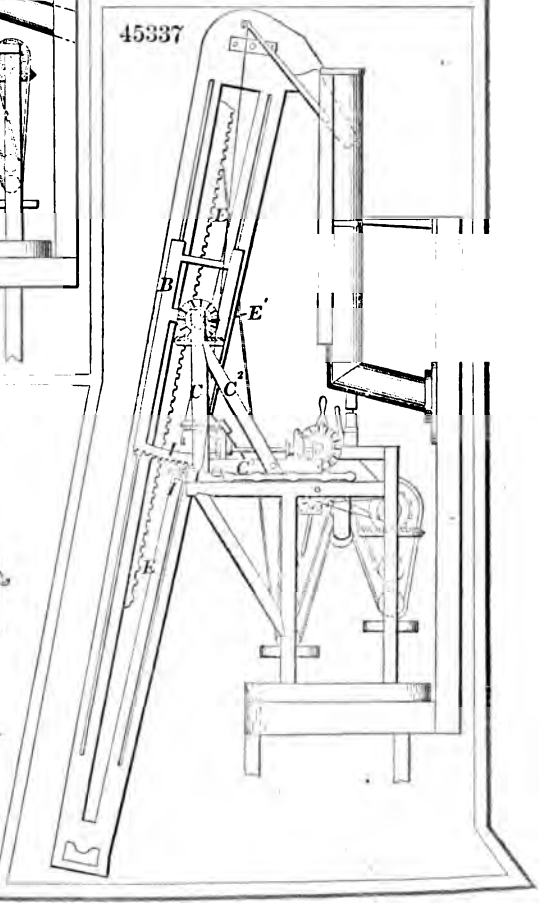

45339

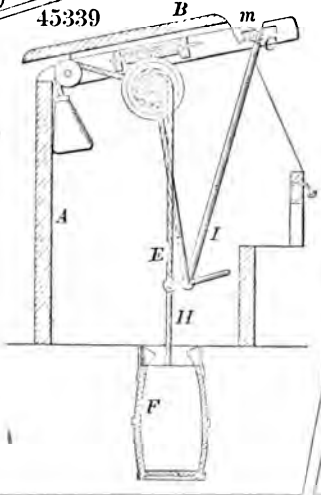

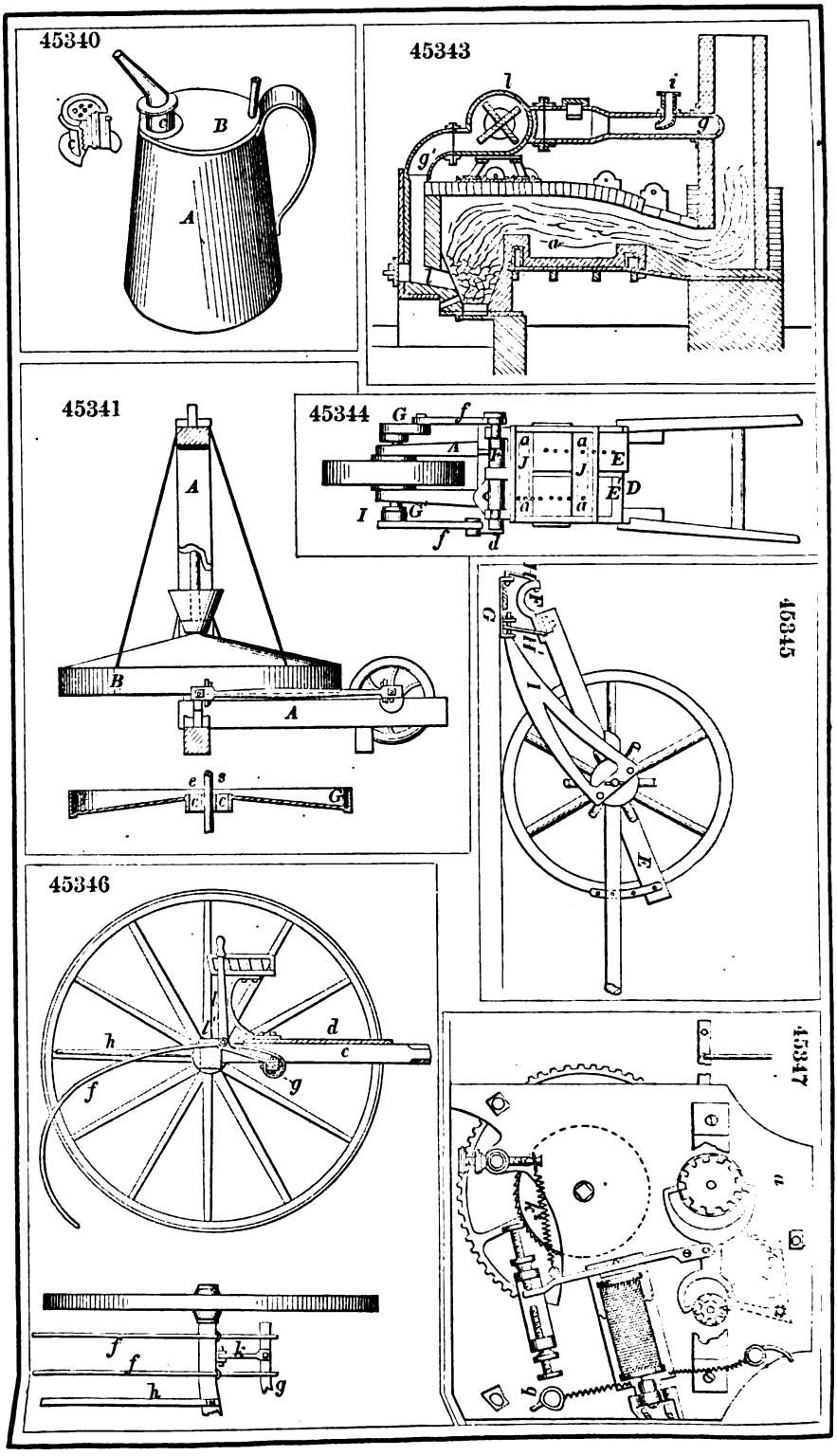
45340
45343
45341
45344
45345
45346
45347

45348

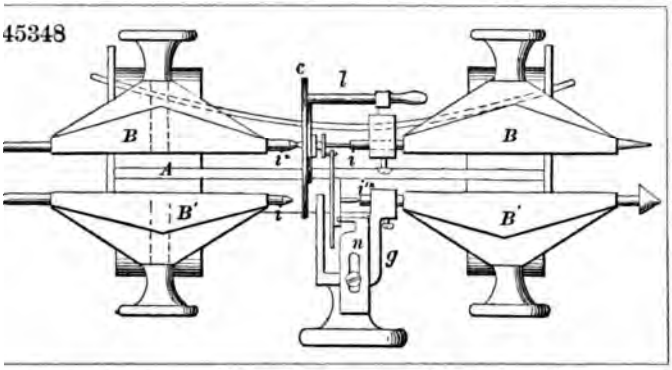

45355

45349

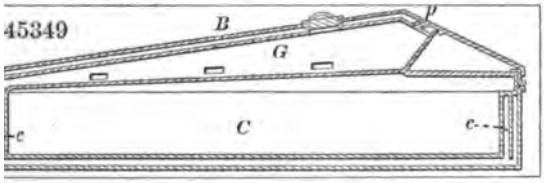

45354

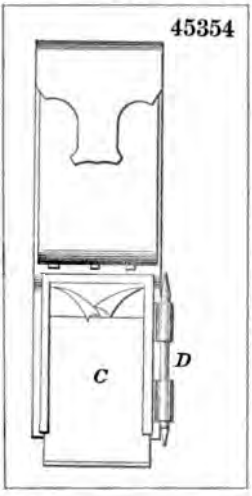

45350

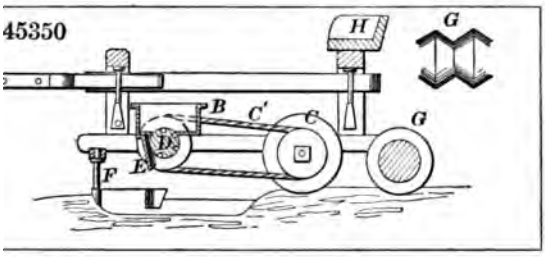

5351

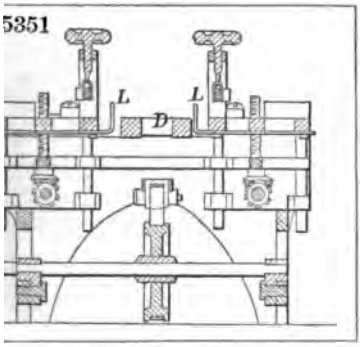

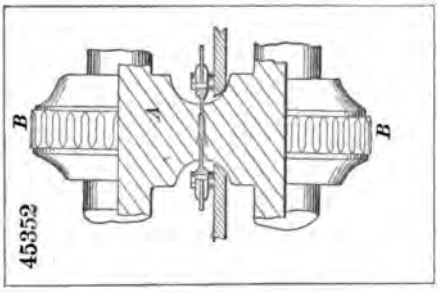

45352

45356

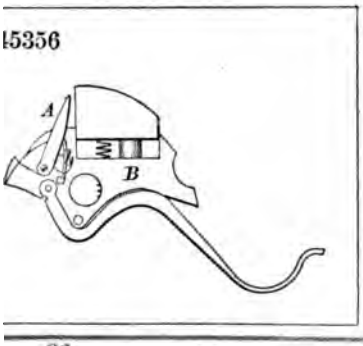

45357

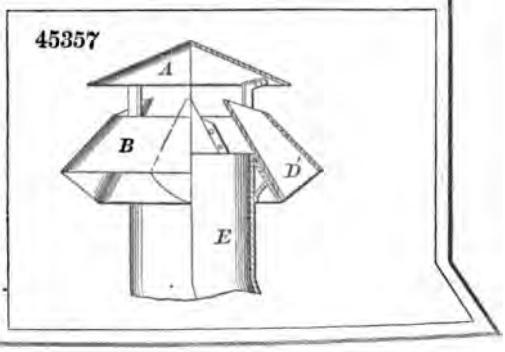

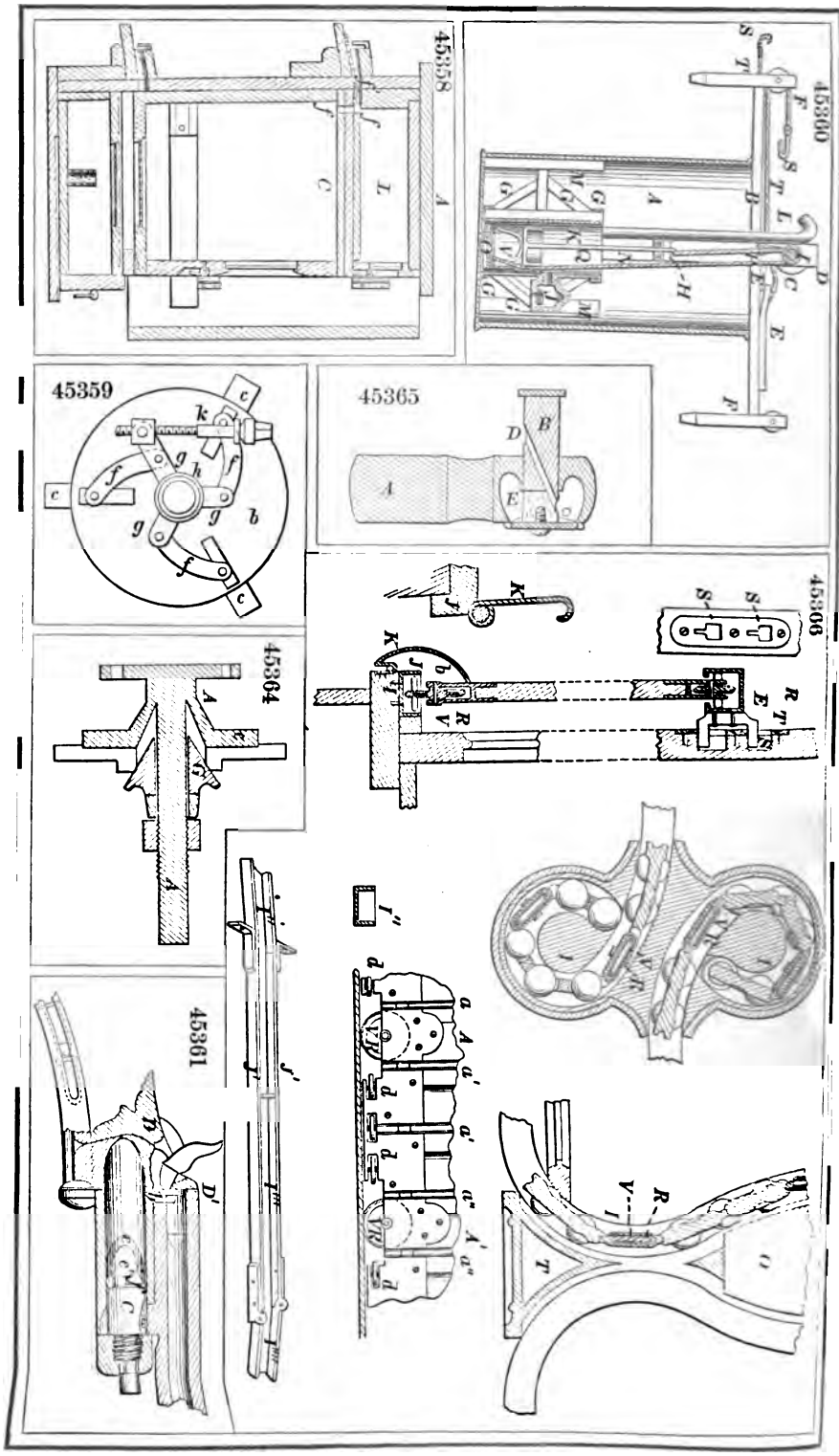
45358
45360
45359
45365
45364
45361
45366

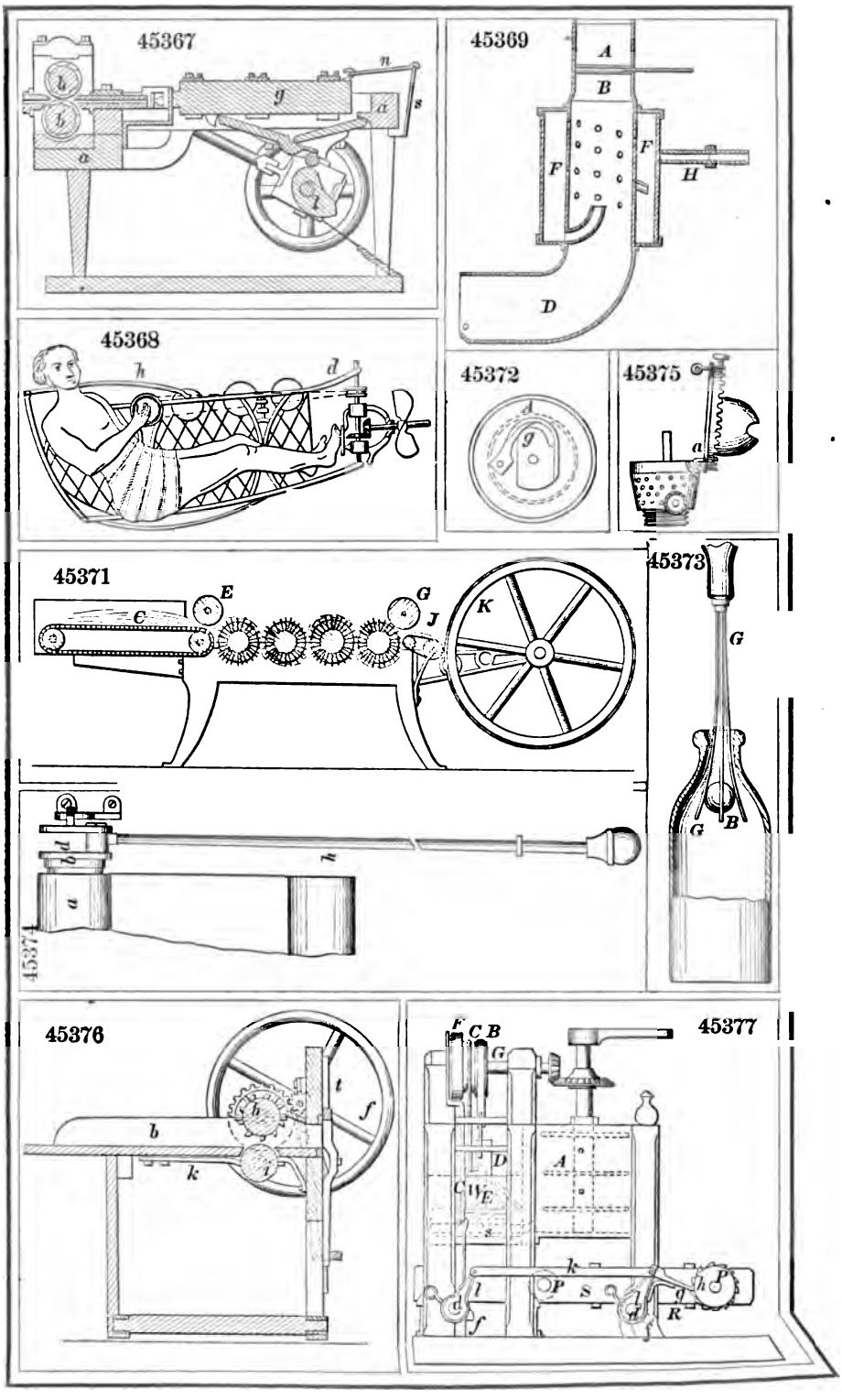
45367
45369
45368
45372
45375
45371
45373
45374
45376
45377

45380

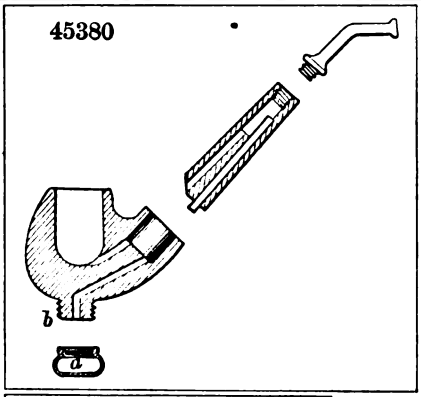

45383

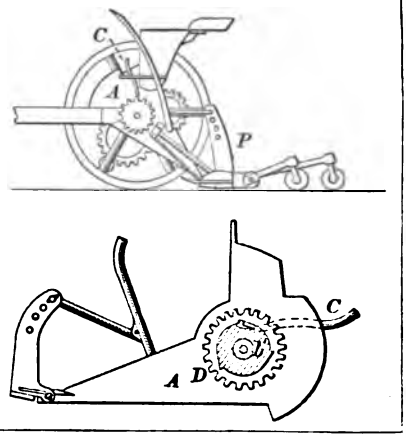

45381

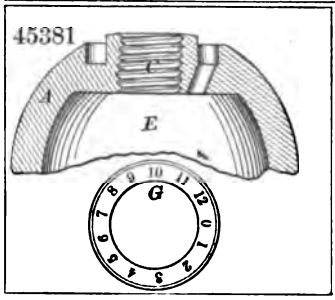

45385

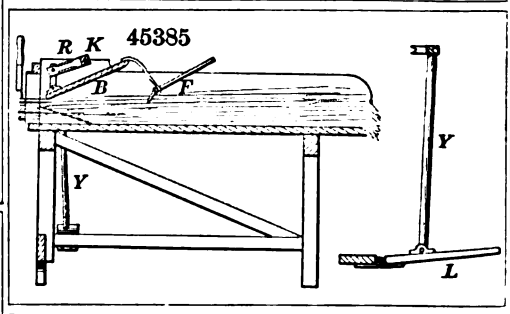

45386

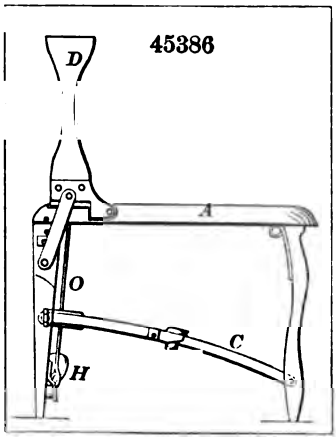

45382

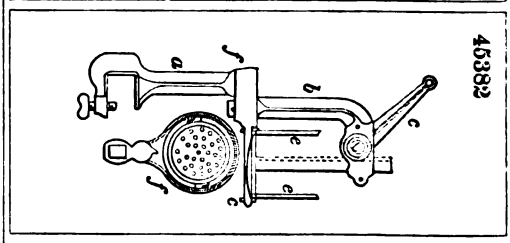

45387

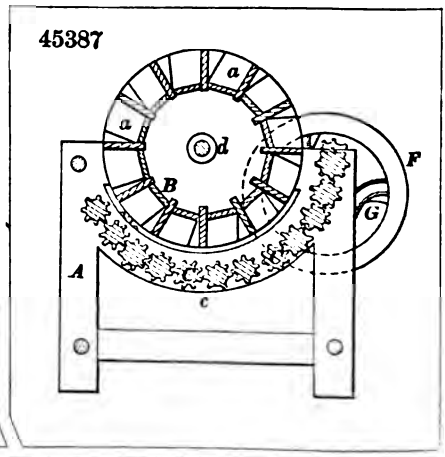

45388

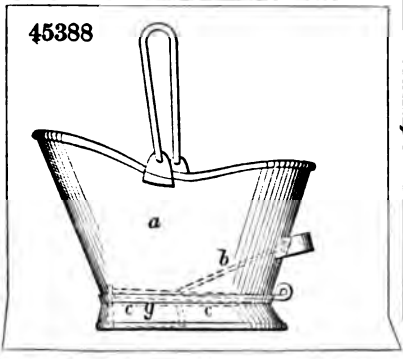

45389

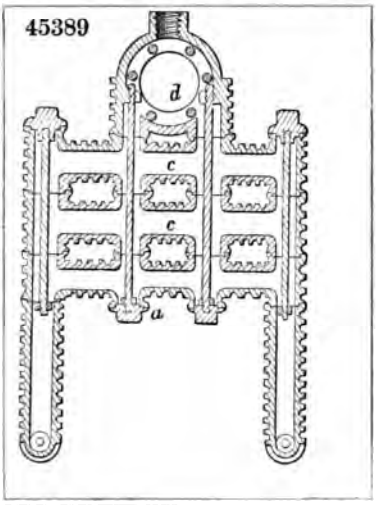

45393

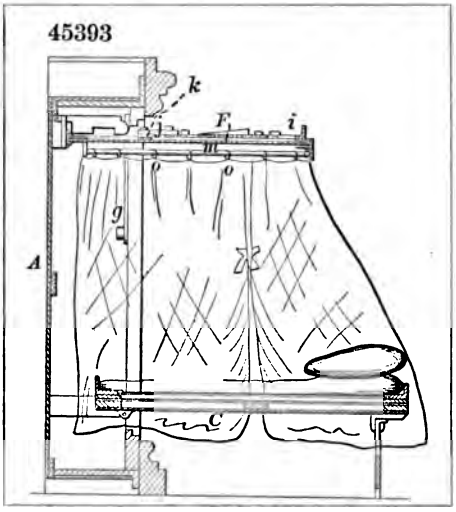

45392

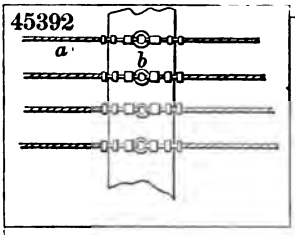

45391

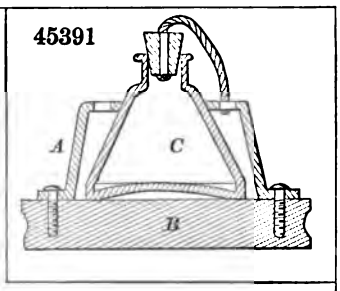

45394

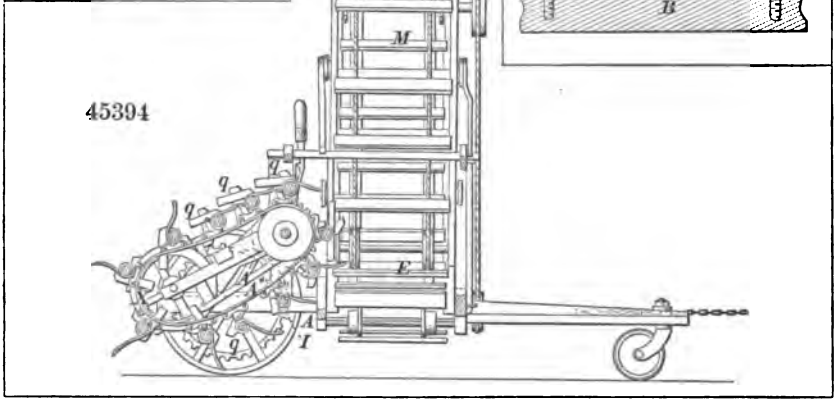

45390

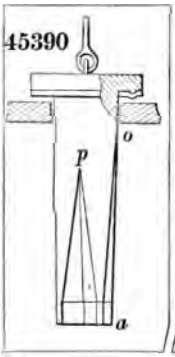

45395

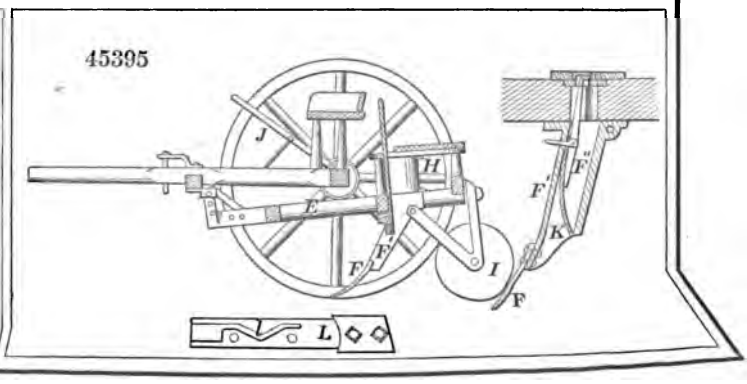

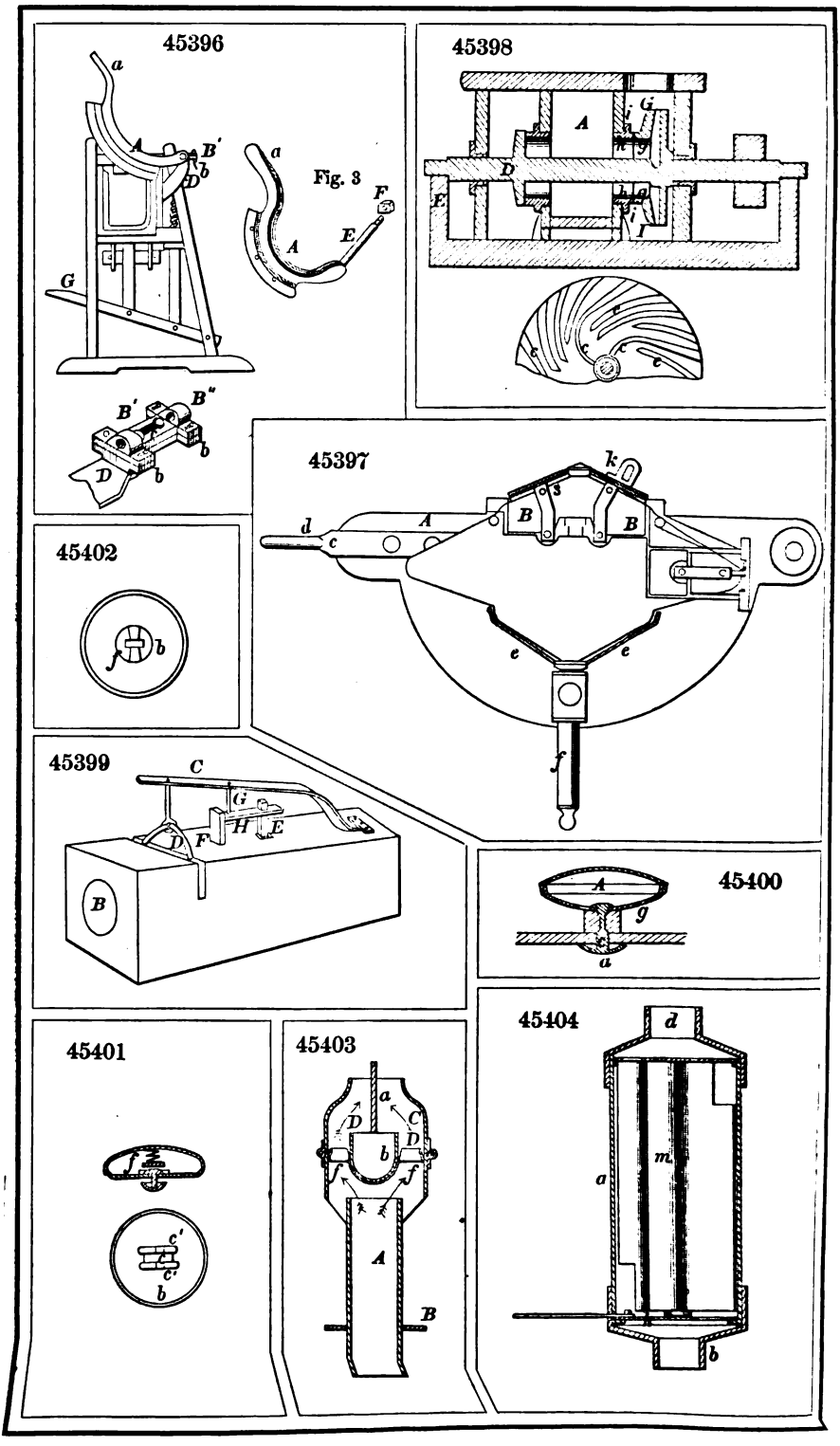
45396
Fig. 3
45398
45397
45402
45399
45400
45401
45403
45404

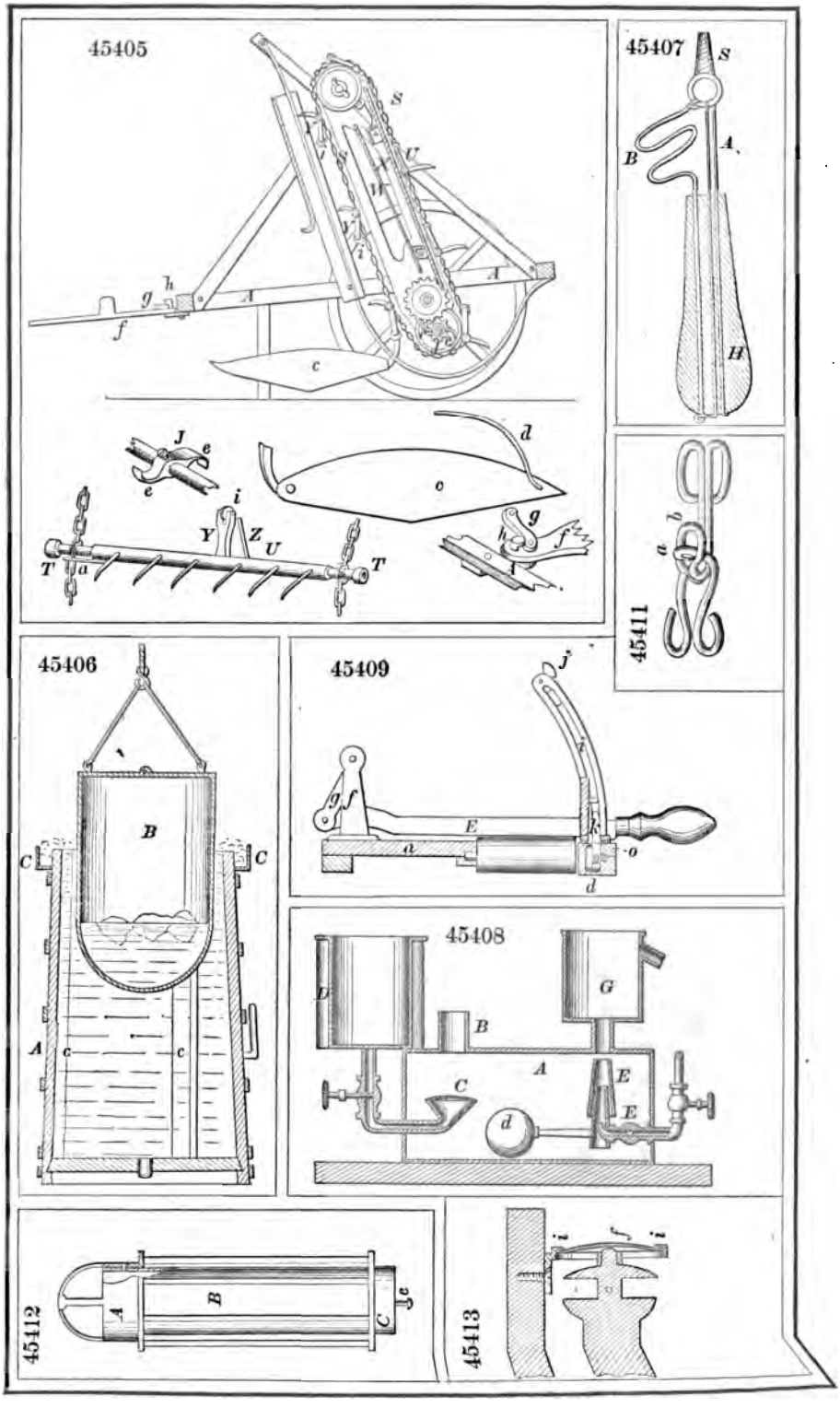
45405
45407
45411
45406
45409
45408
45412
45413

45414

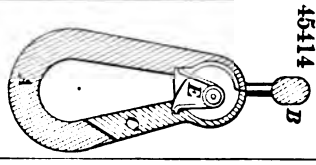

45415

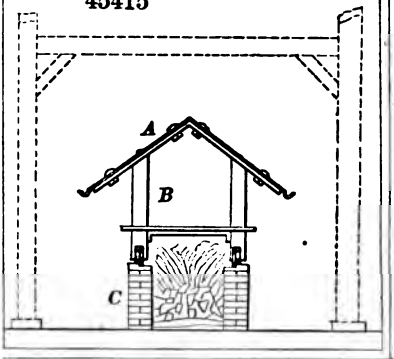

45416

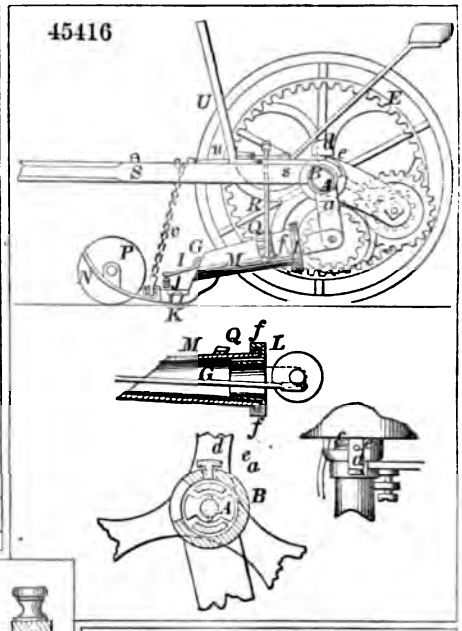

45417

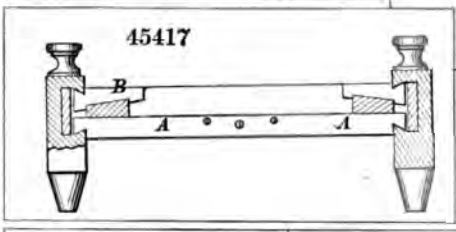

45420

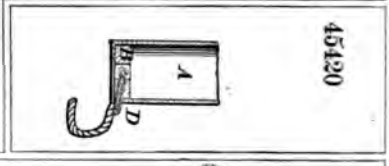

45418

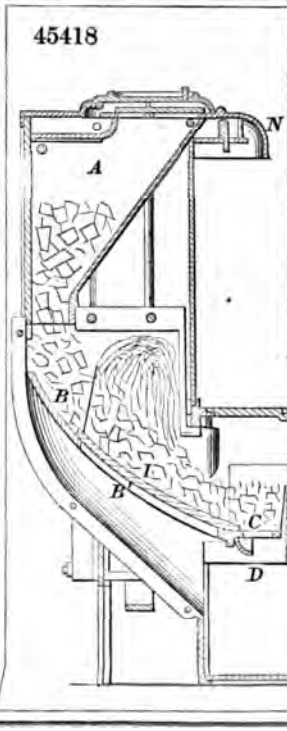

45422

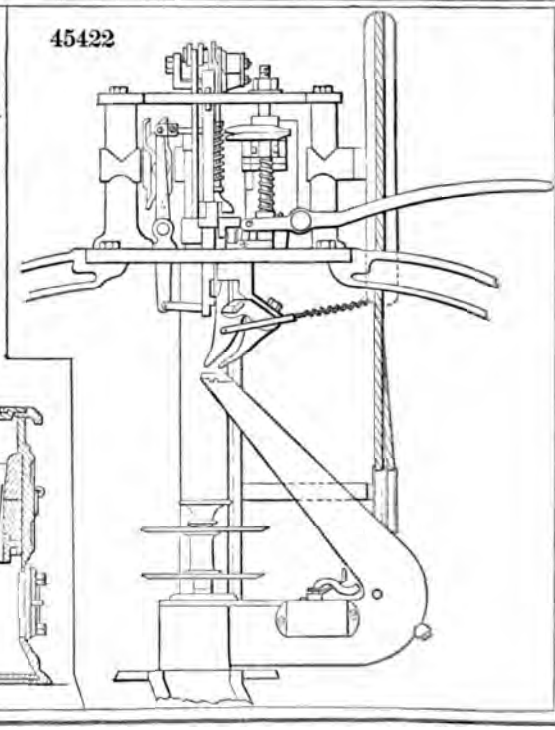

45423

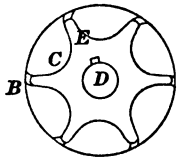

45427

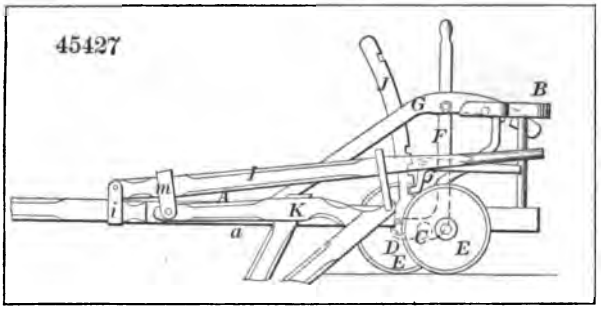

45424

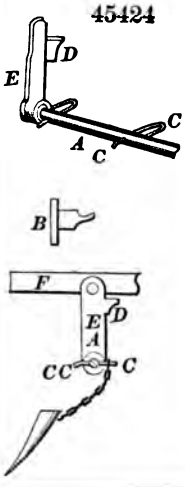

45429

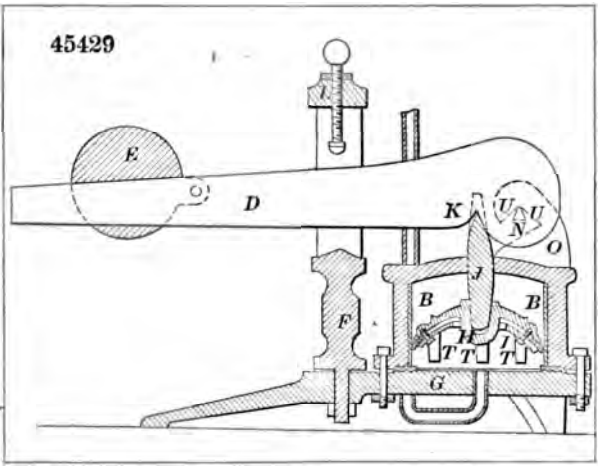

45425

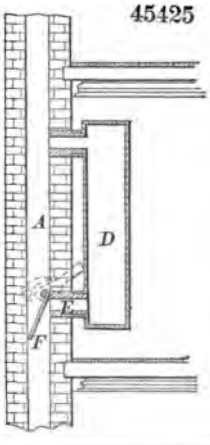

45430

45428

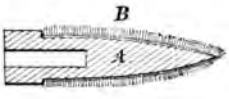

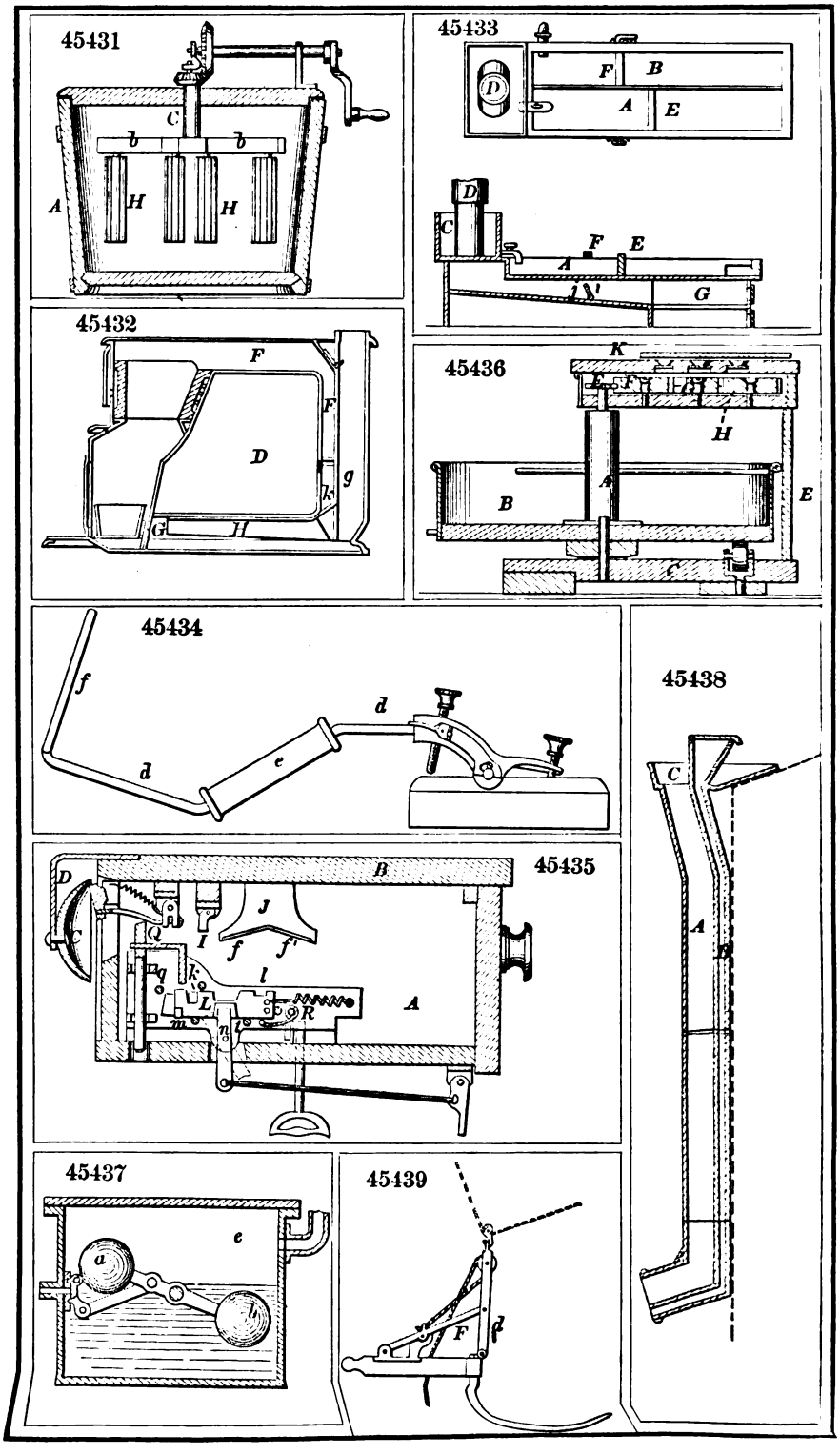
45431
45433
45432
45436
45434
45438
45435
45437
45439

45442

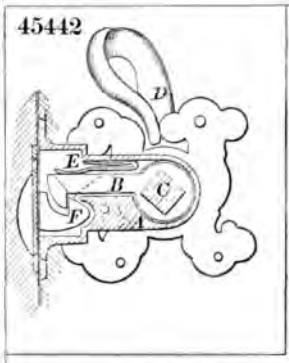

45444

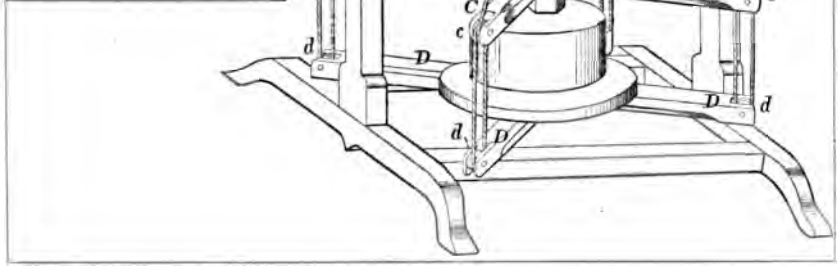

45443

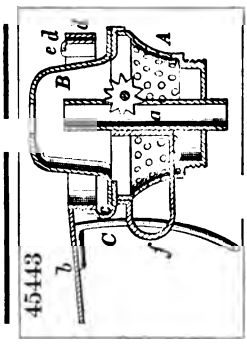

45445

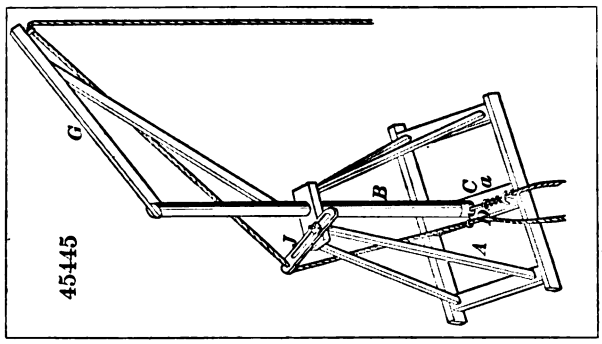

45446

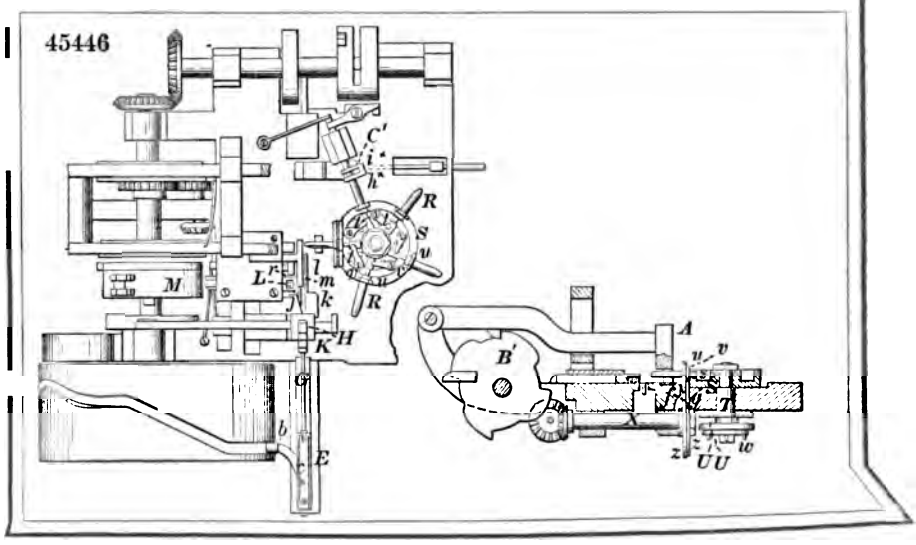

45447

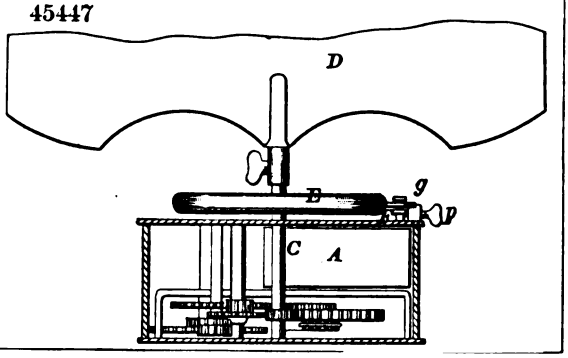

45450

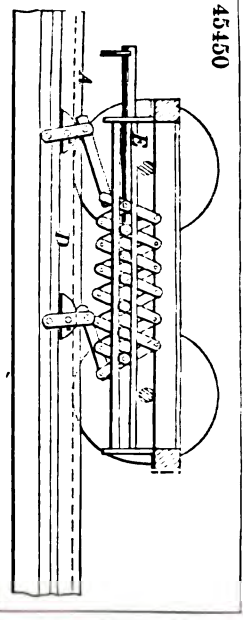

45449

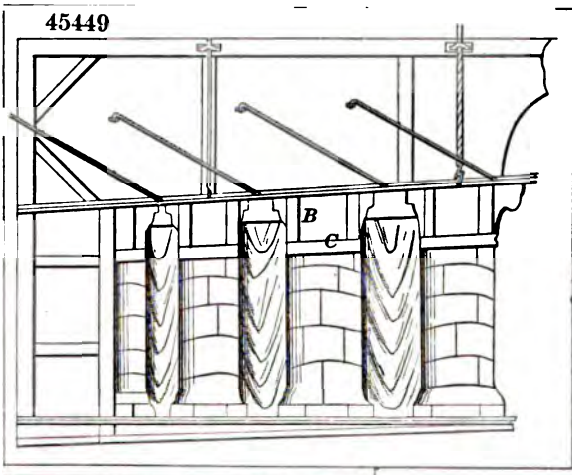

45451

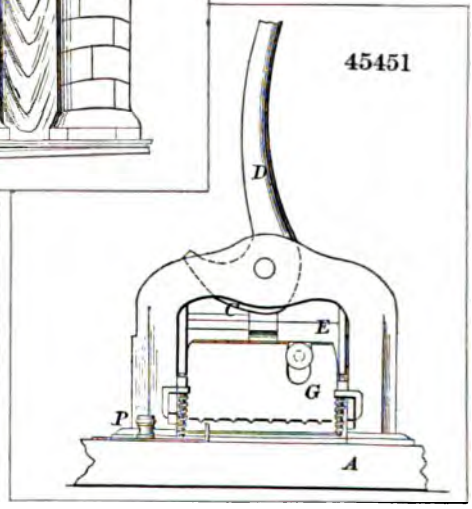

45452

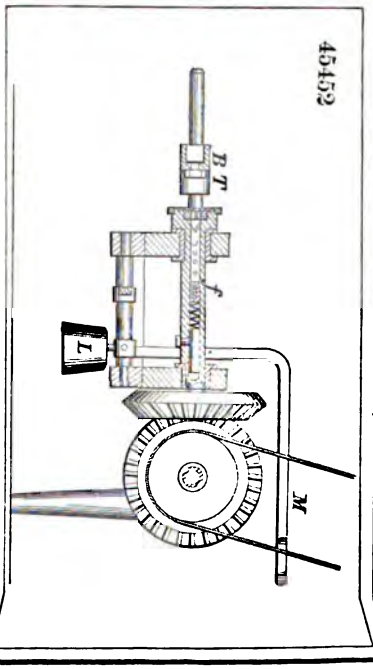

45448

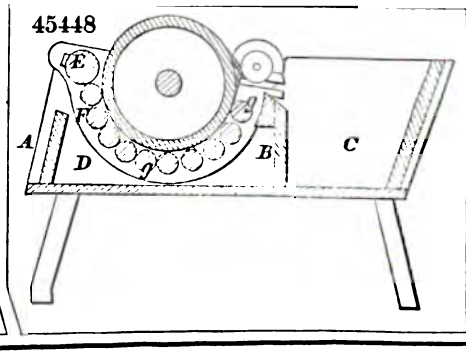

45453

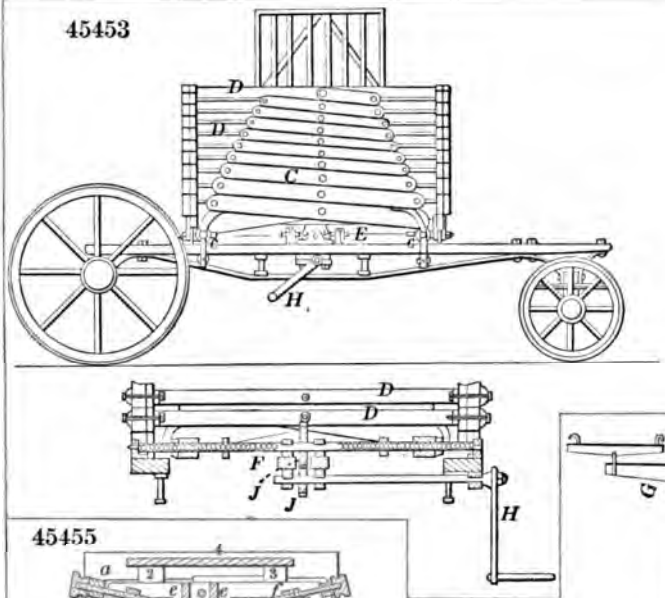

45455

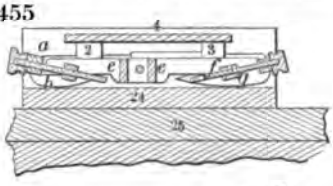

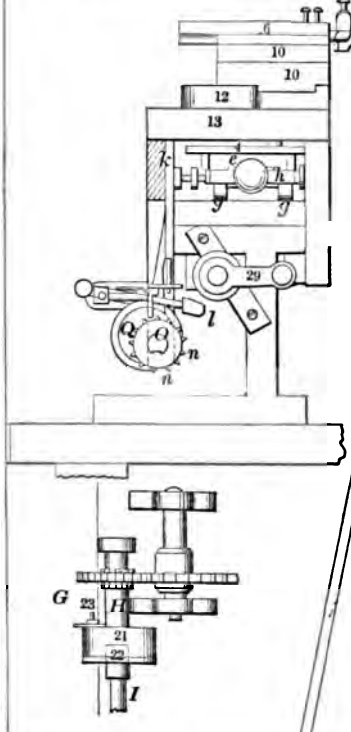

45454

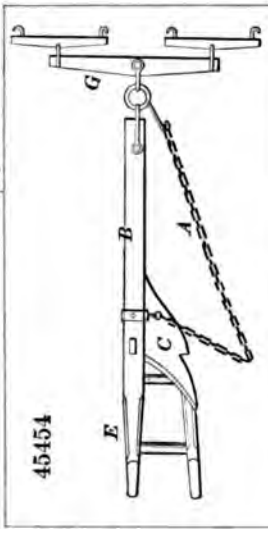

45456

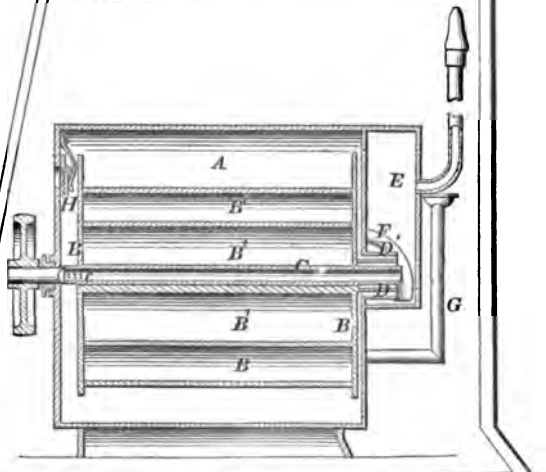

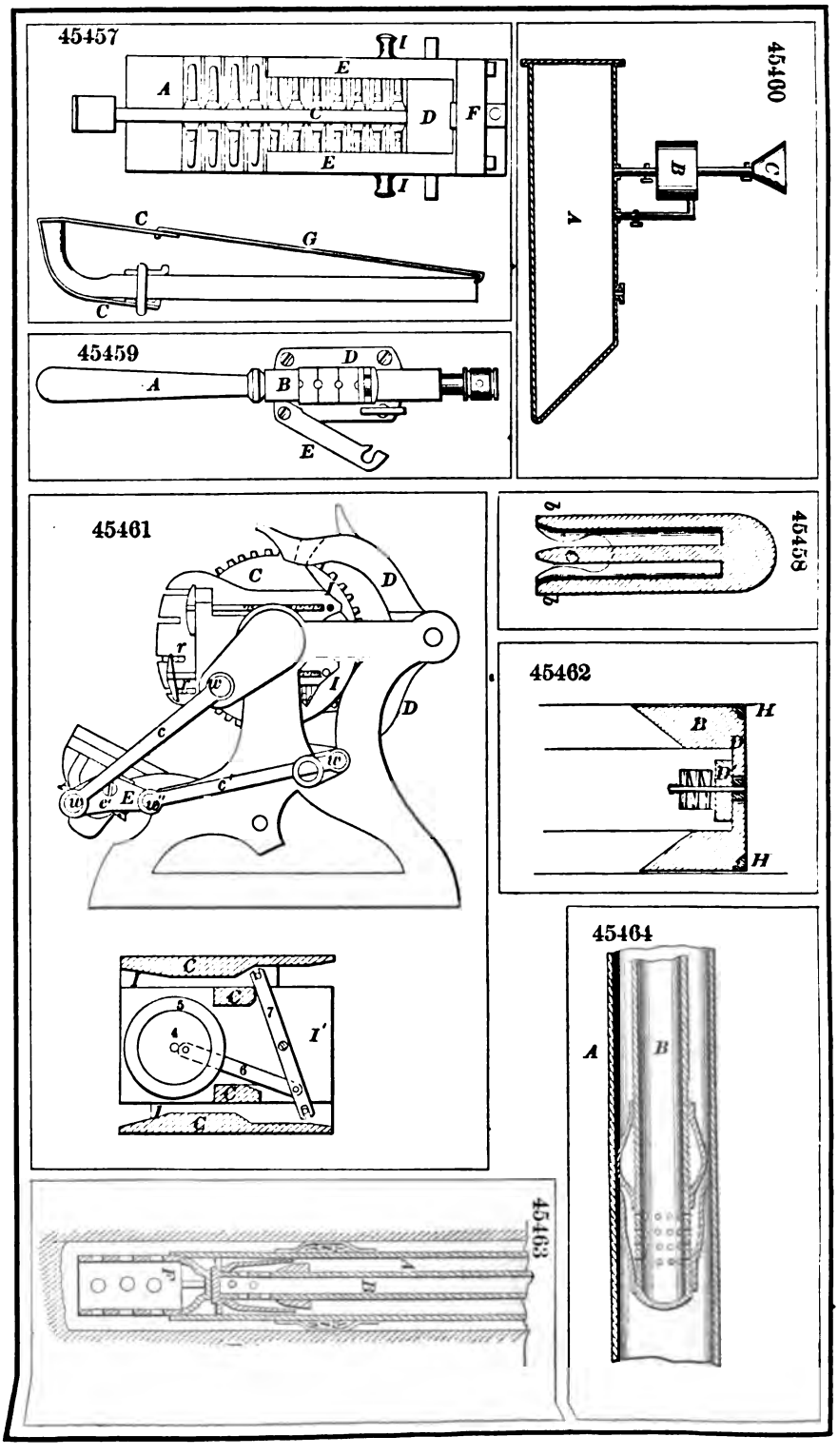
45457
45460
45459
45458
45461
45462
45463
45464

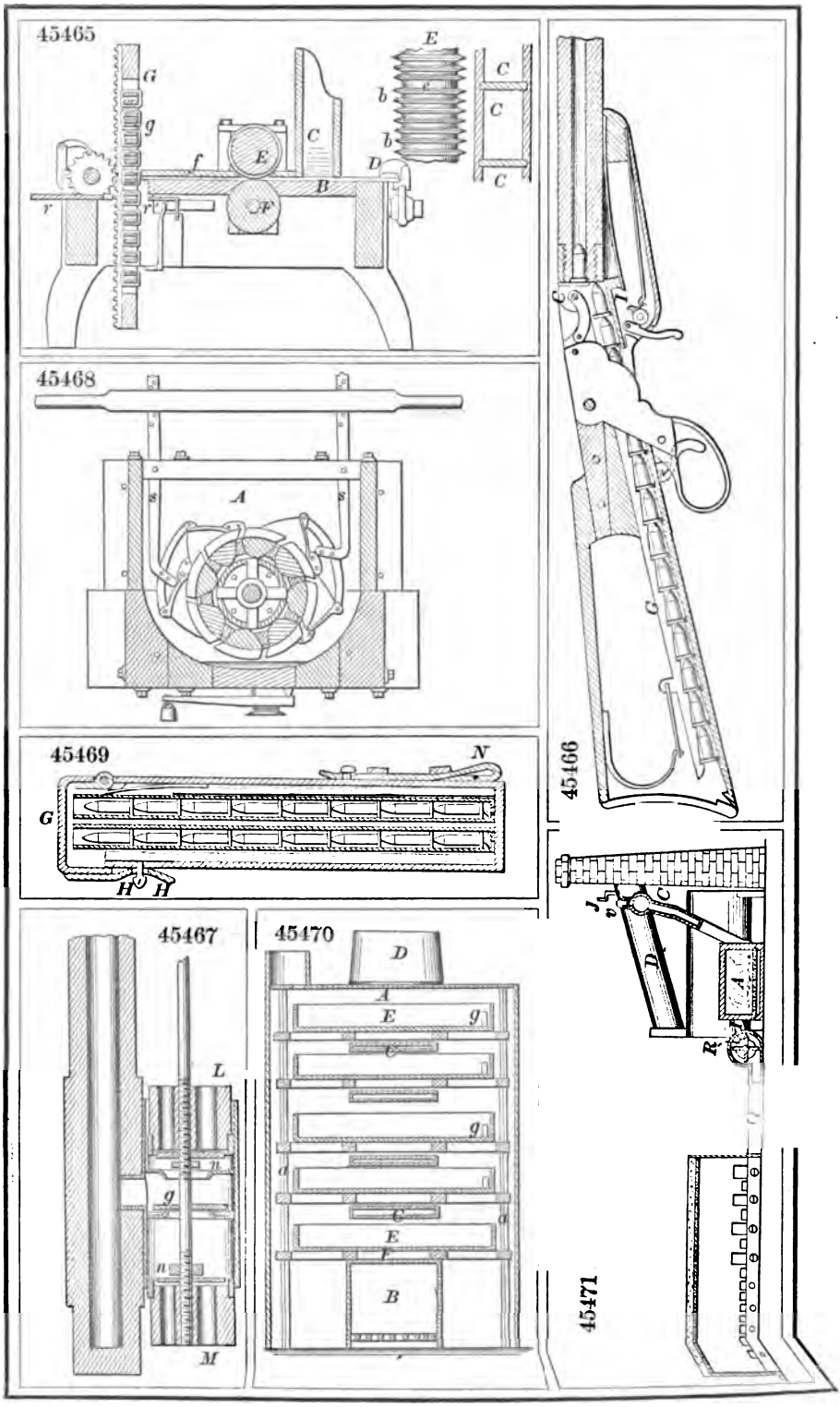
45465
45466
45467
45468
45469
45470
45471

45472

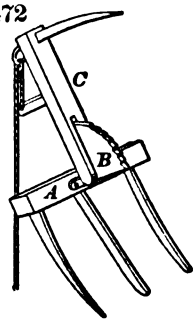

45475

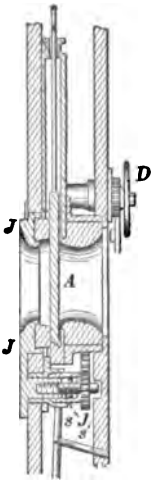

45478

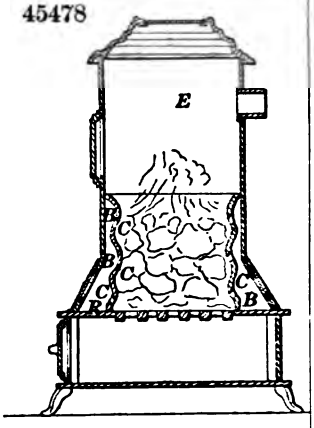

45473

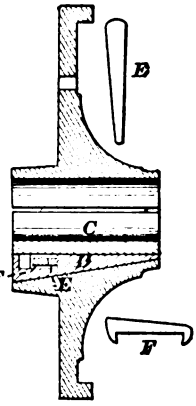

45477

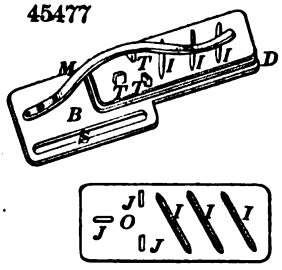

45476

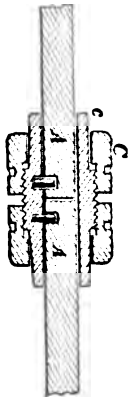

45474

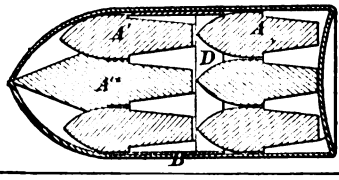

45479

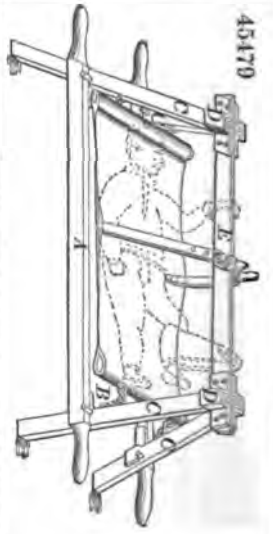

45481

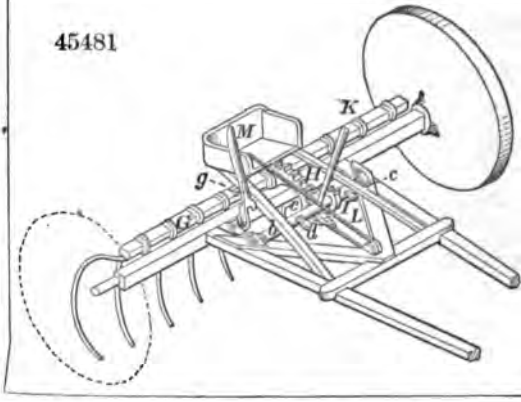

45482

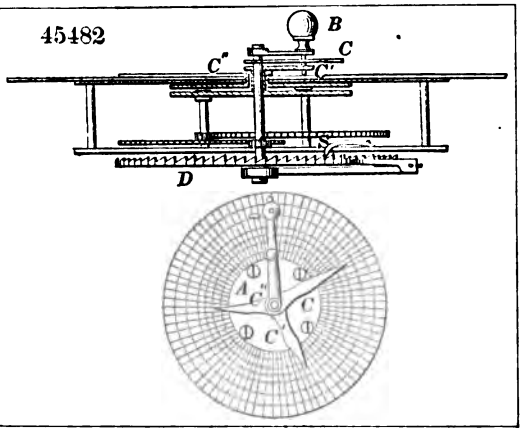

45483

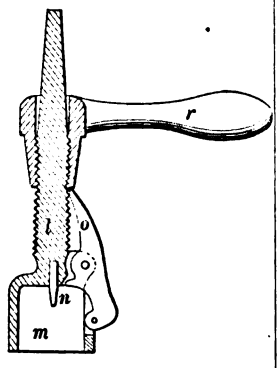

45484

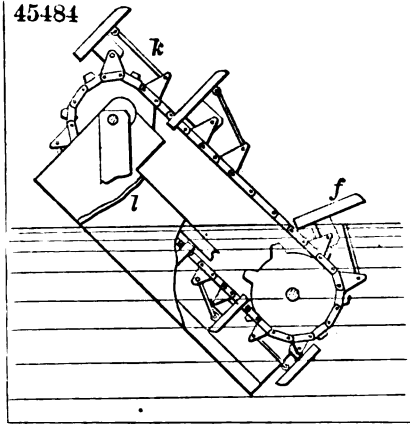

45485

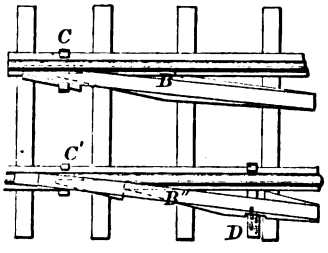

45486

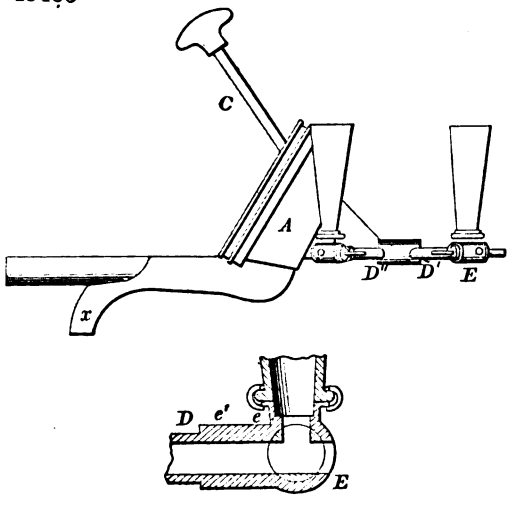

45487

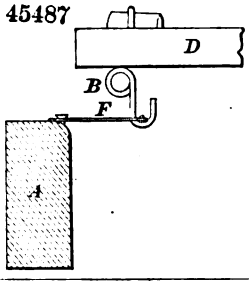

45488

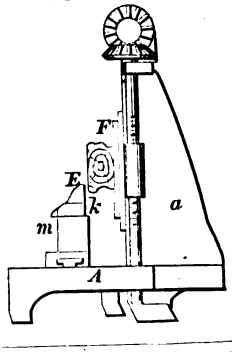

45489

45490

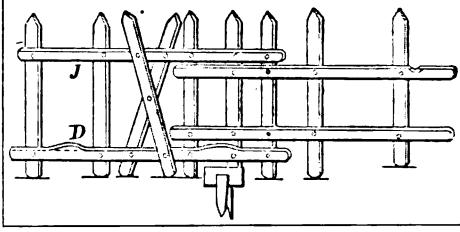

45491

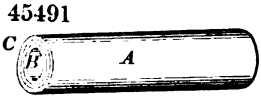

45496

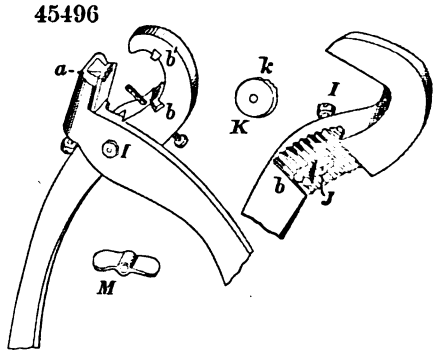

45494

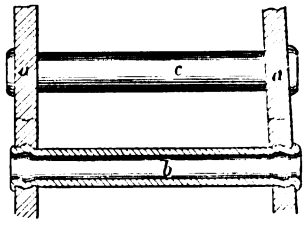

45497

45493

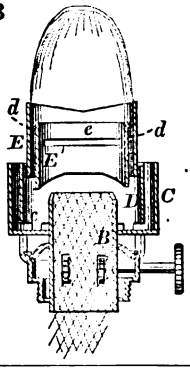

45492

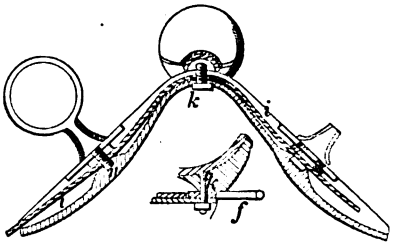

45498

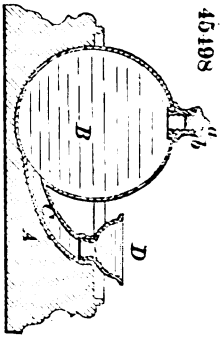

45495

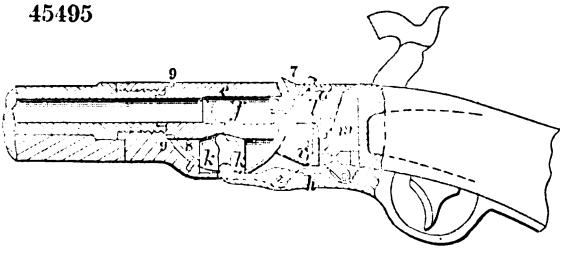

45499

45503

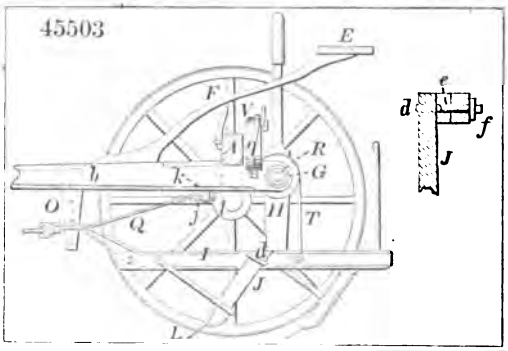

45502

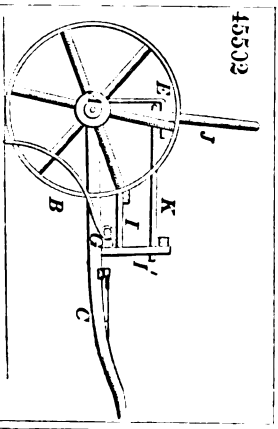

45501

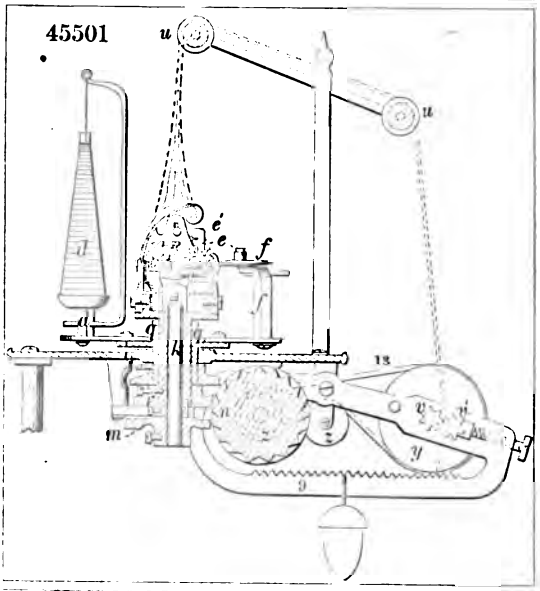

45504

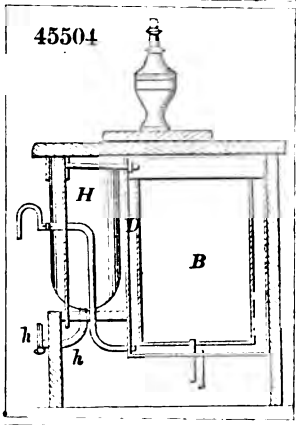

45500

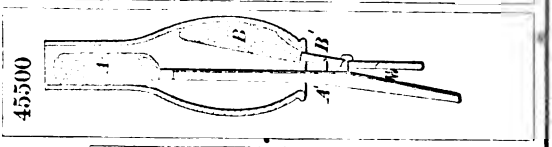

45505

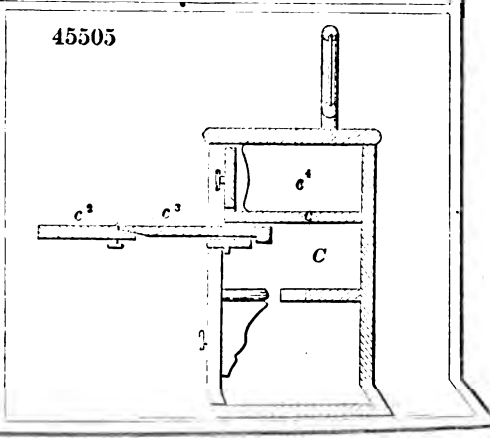

45506

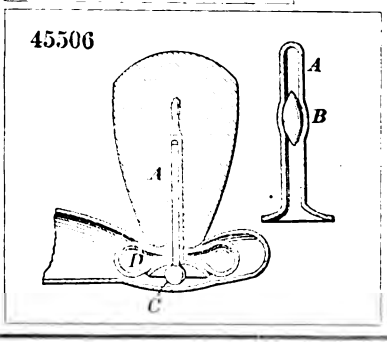

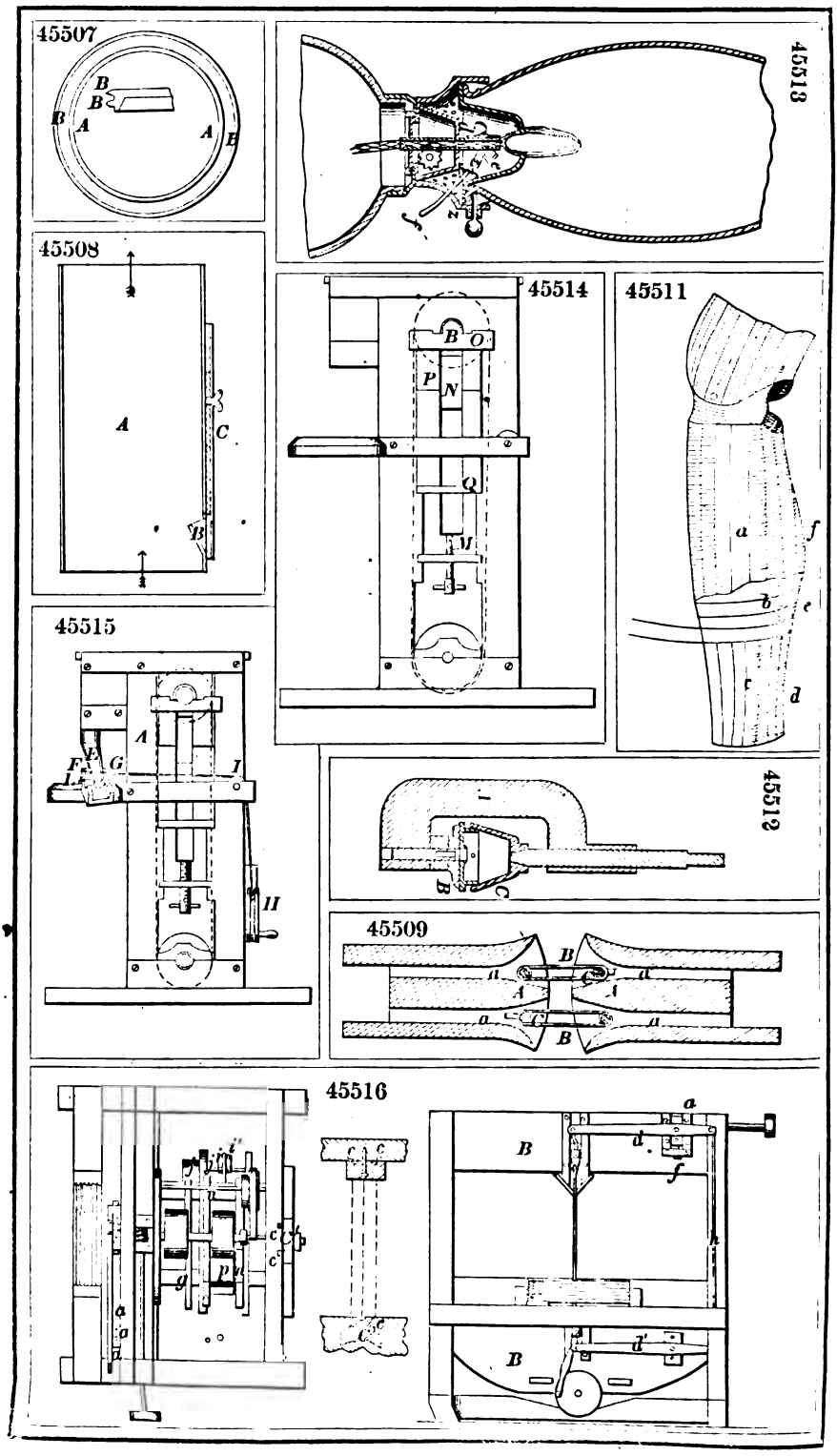
45507
45513
45508
45514
45511
45515
45512
45509
45516

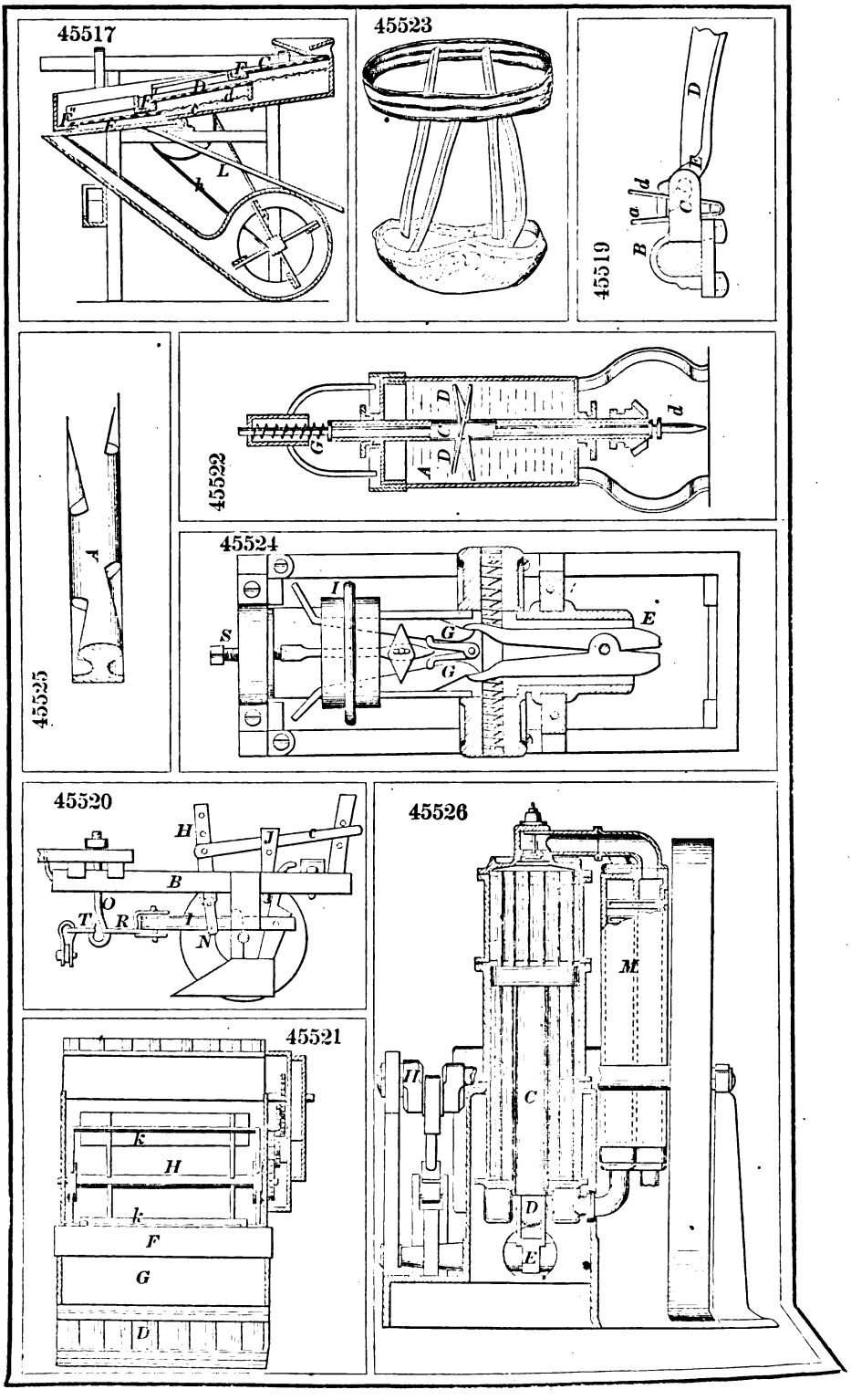
45517
45523
45519
45525
45522
45524
45520
45521
45526

45527

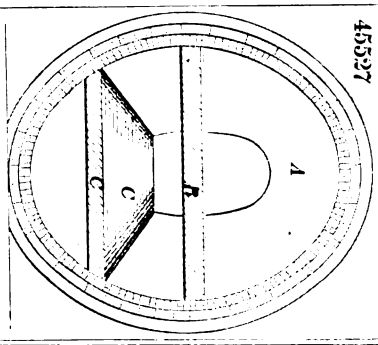

45528

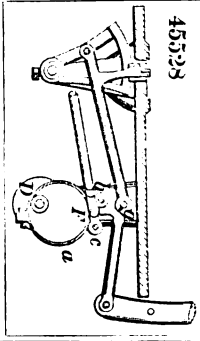

45529

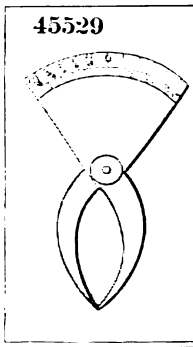

45530

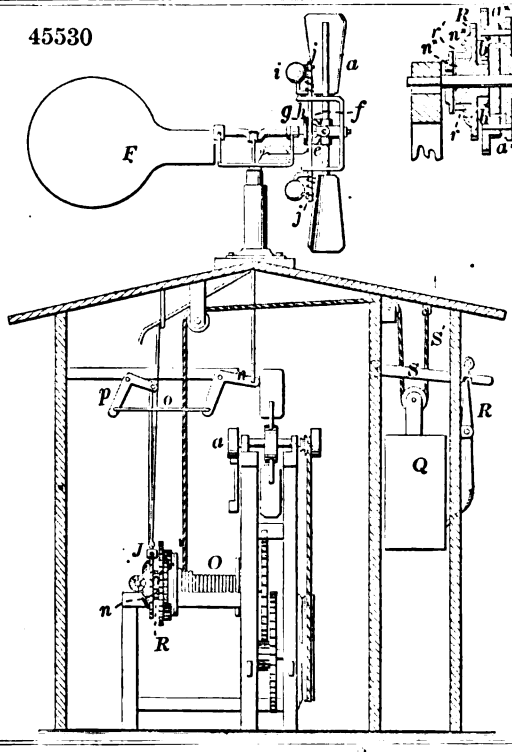

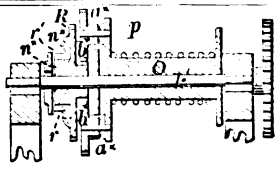

45532

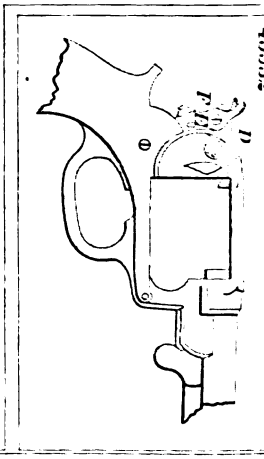

45531

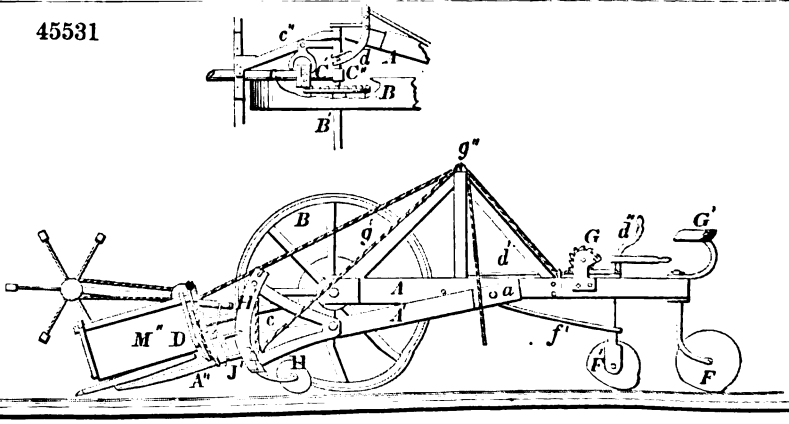

45533

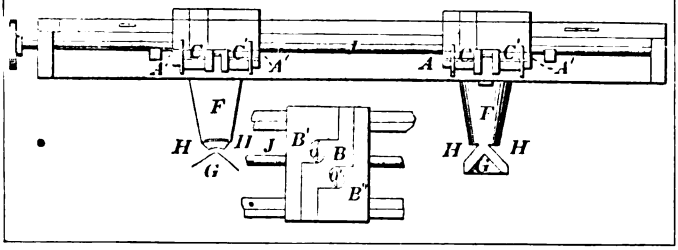

45536

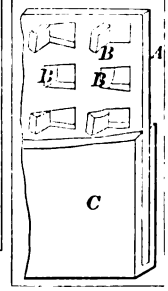

45535

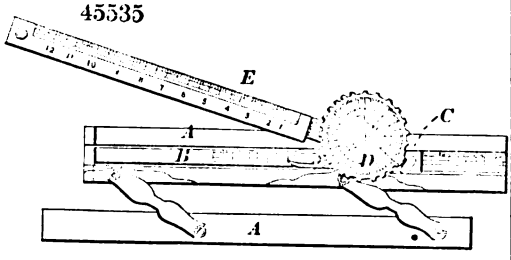

45539

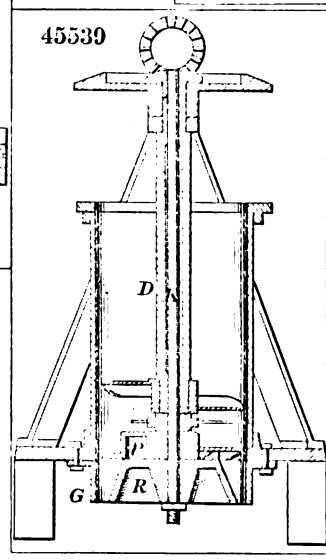

45537

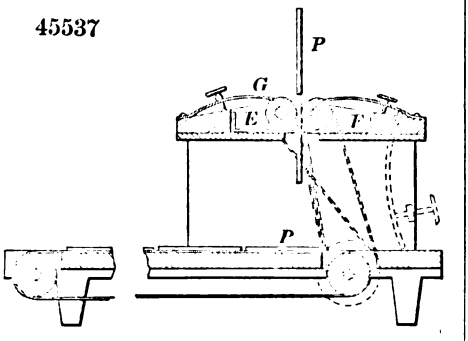

45538

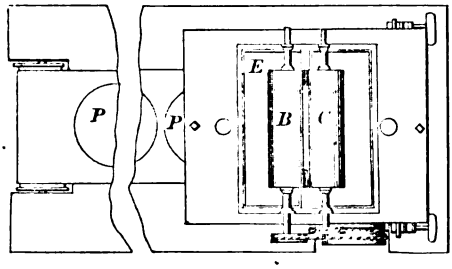

45540

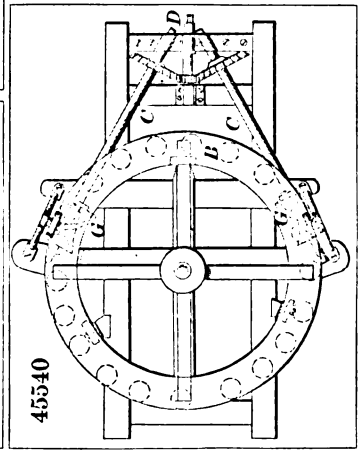

45541

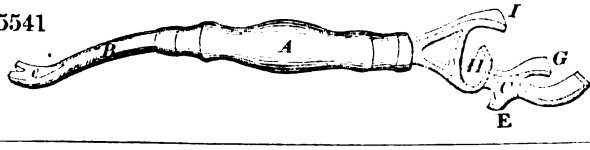

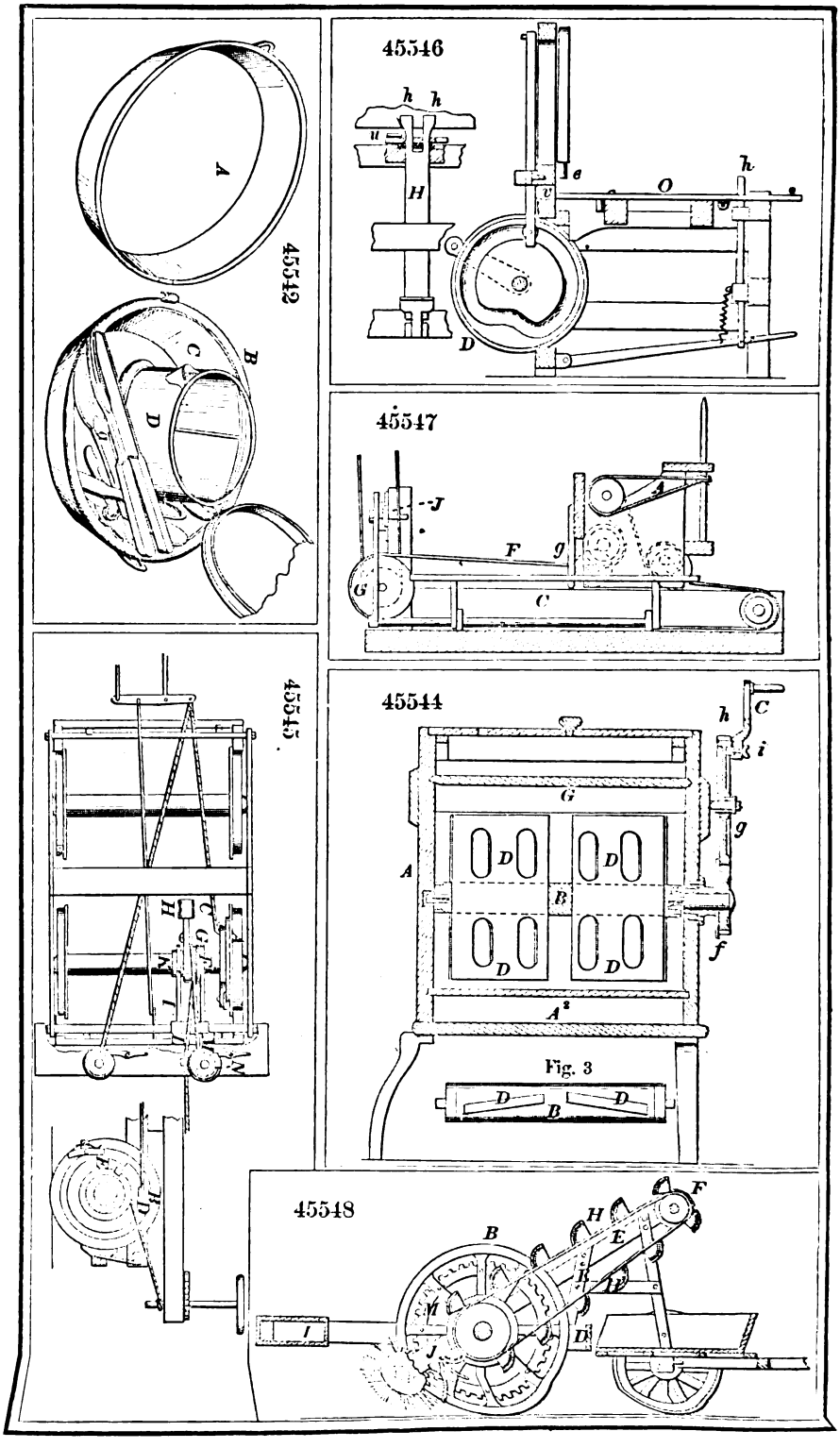
45542
A
B
C
D
45546
h
h
u
H
e
v
O
h
D
45547
J
F
g
A
G
C
45545
H
C
G
M
I
M
45544
h
C
i
G
g
A
D
D
B
D
D
f
A²
Fig. 3
D
B
D
45548
F
H
B
E
K
D
M
I
J
D

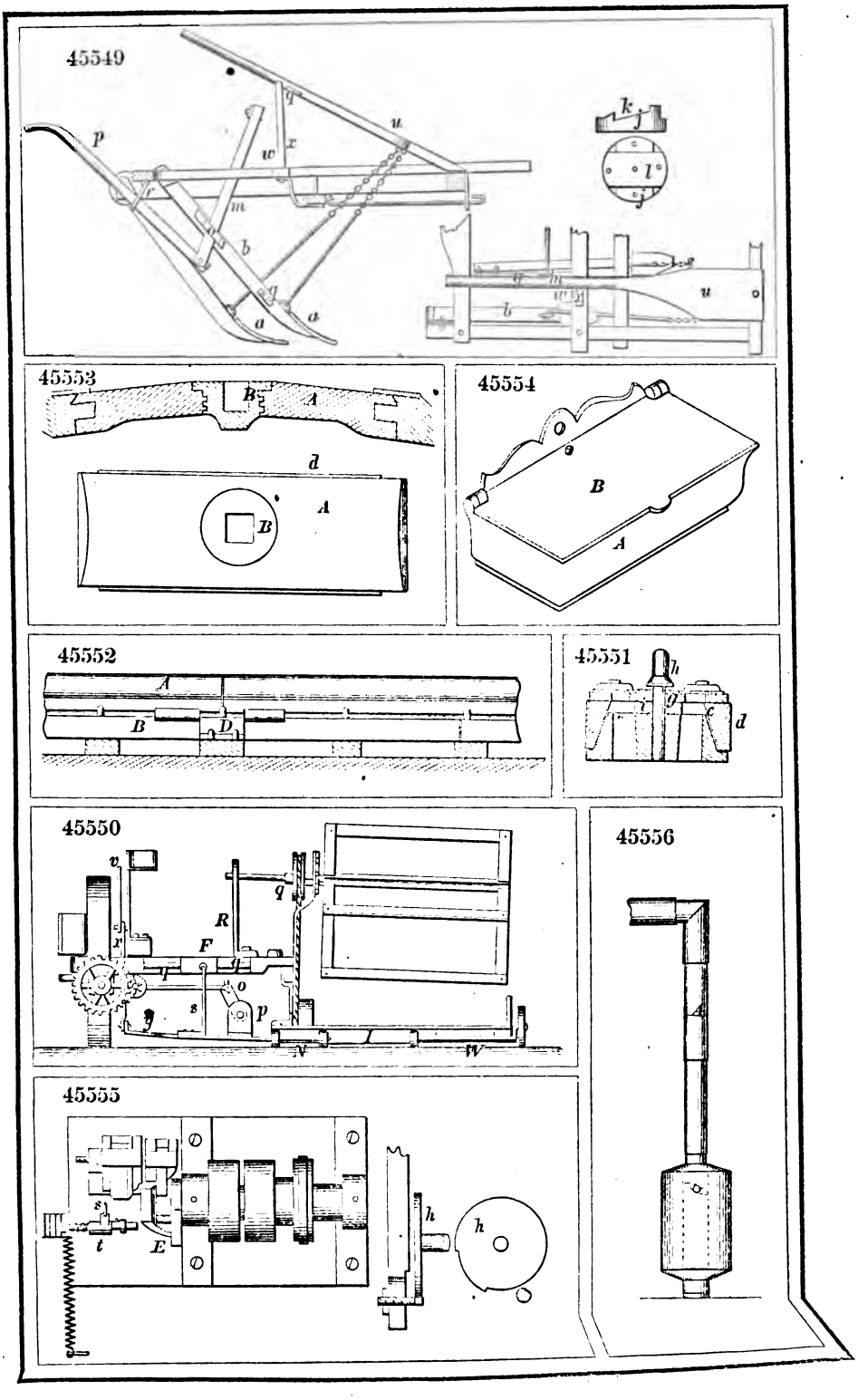
45549
45553
45554
45552
45551
45550
45556
45555

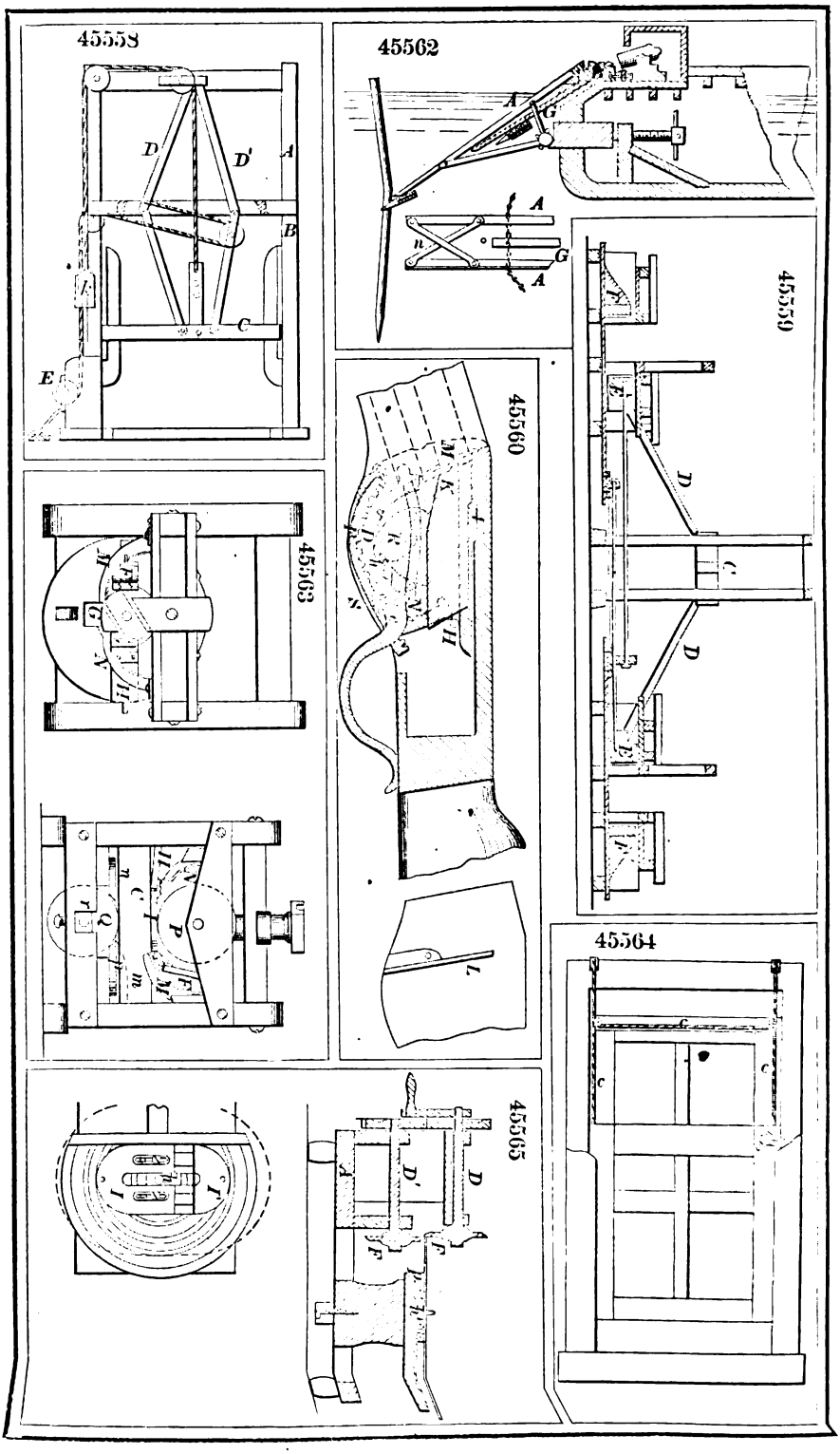
45558
45559
45560
45561
45562
45563
45564
45565

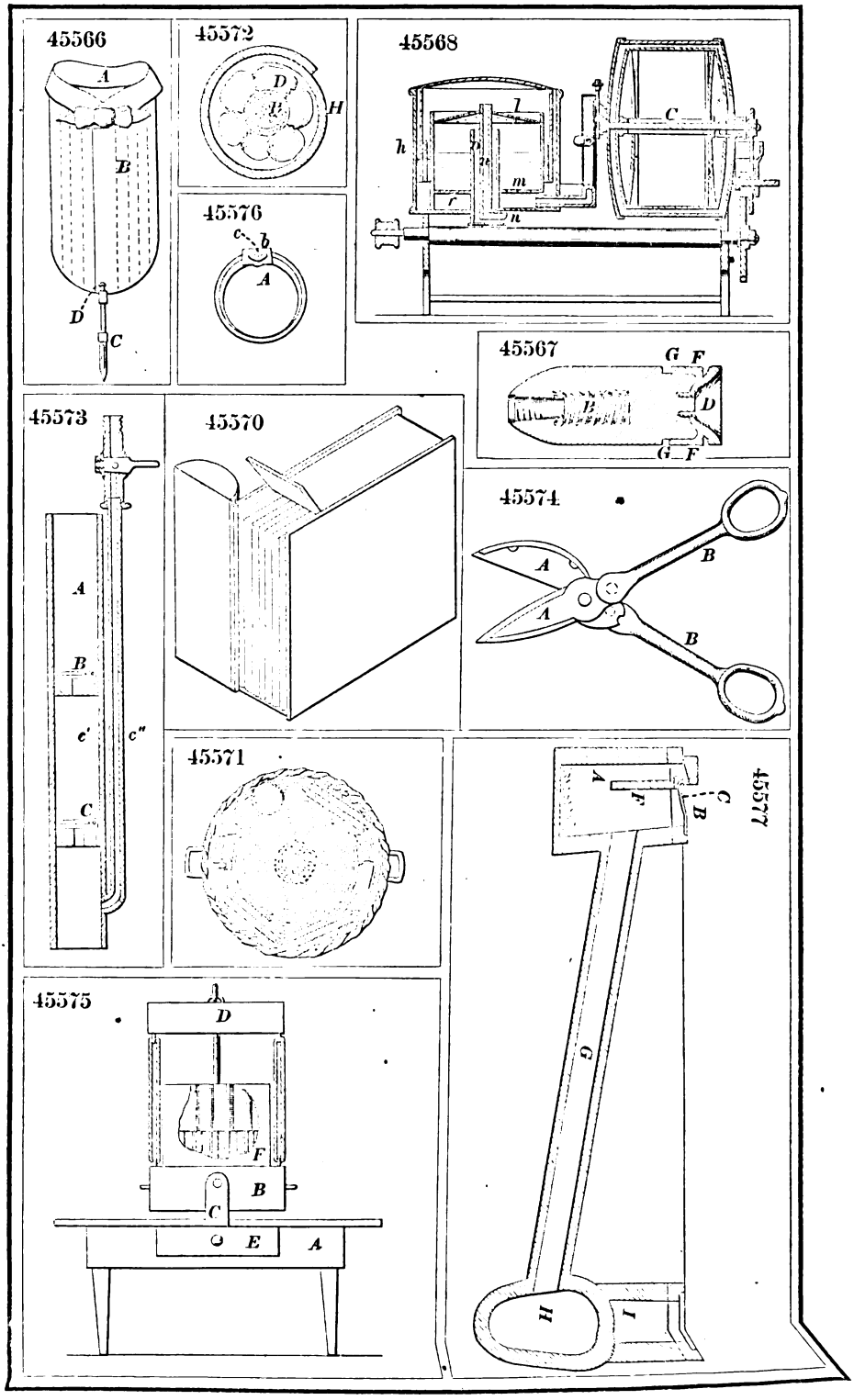
45566
A
B
D
C
45572
D
H
45576
c
b
A
45568
l
h
m
r
n
C
45567
G F
B
D
G F
45573
A
B
c'
c''
C
45570
45574
A
A
B
B
45571
45577
A
F
C
B
G
H
I
45575
D
F
B
C
E
A

45578

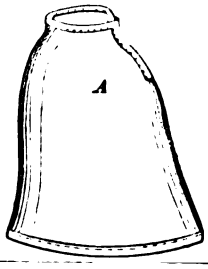

45580

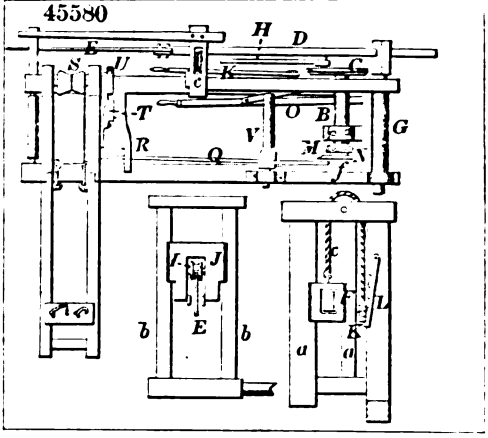

45582

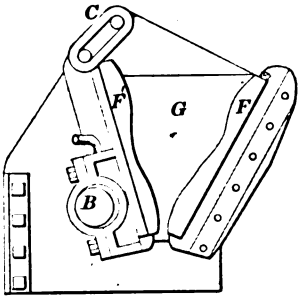

45585

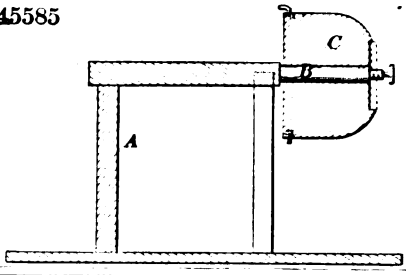

45579

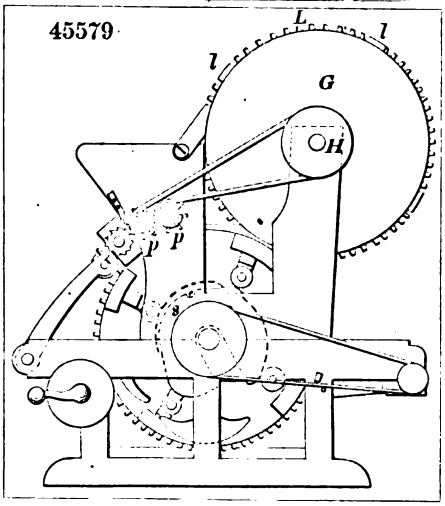

45581

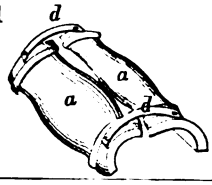

45584

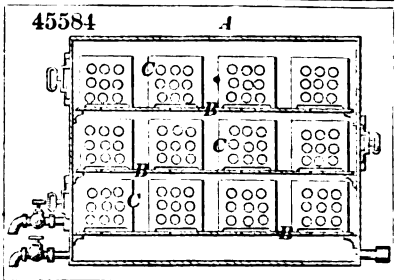

45583

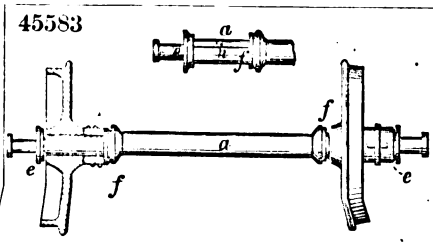

45586

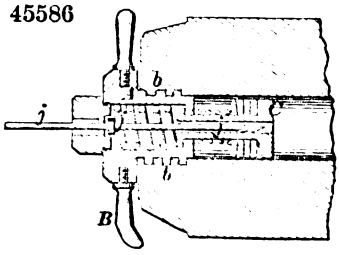

45587

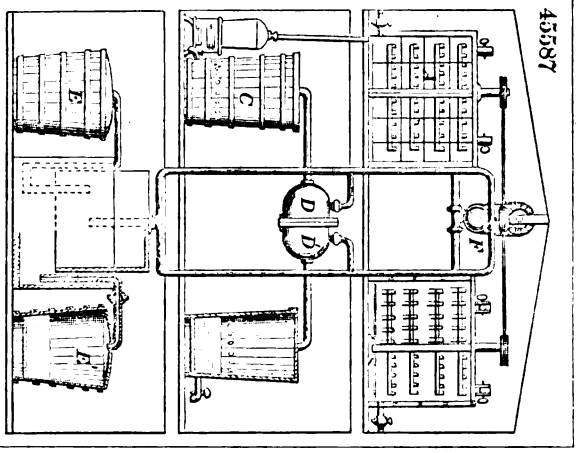

45590

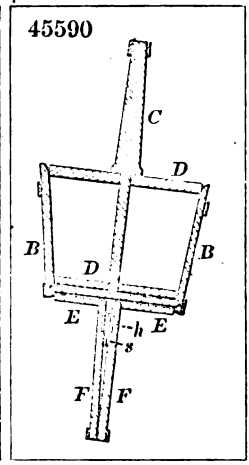

45588

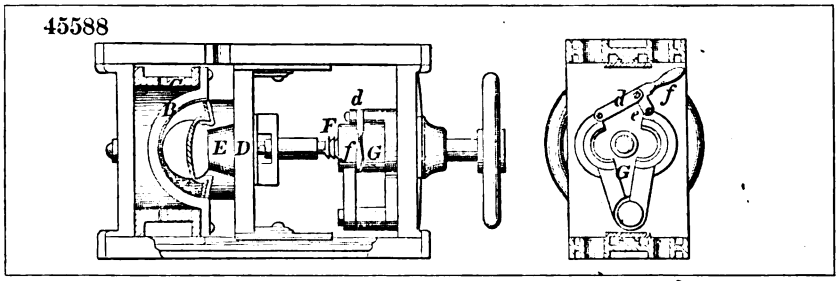

45591

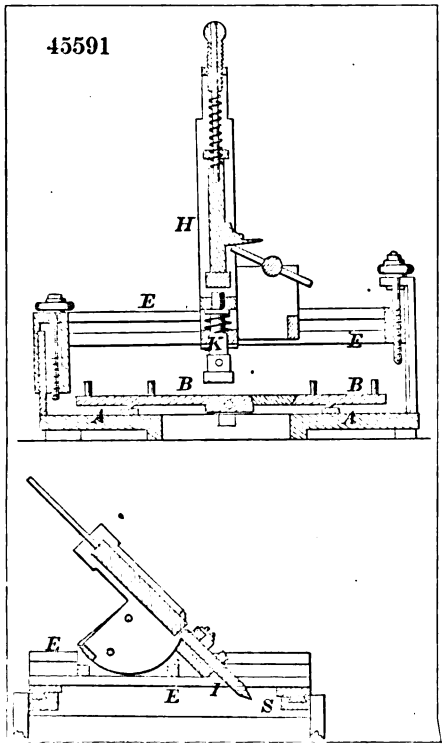

45589

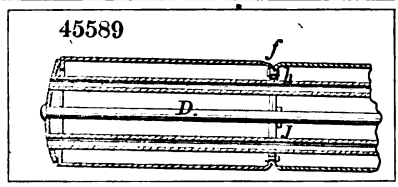

45592

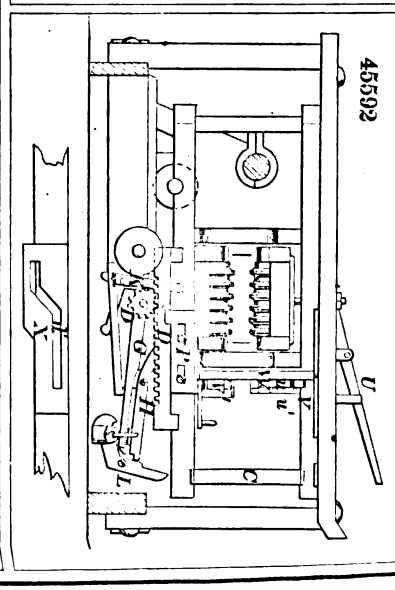

45593

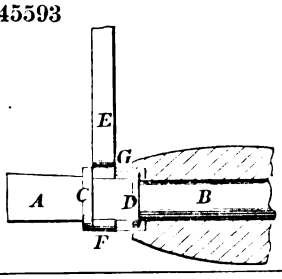

45595

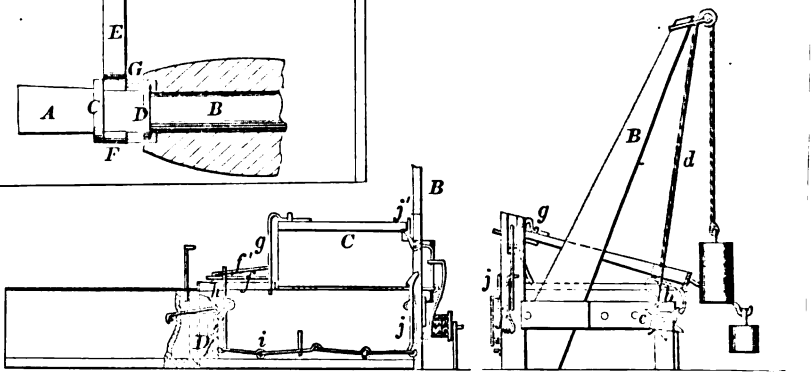

45597

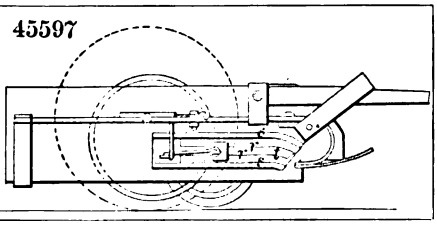

45598

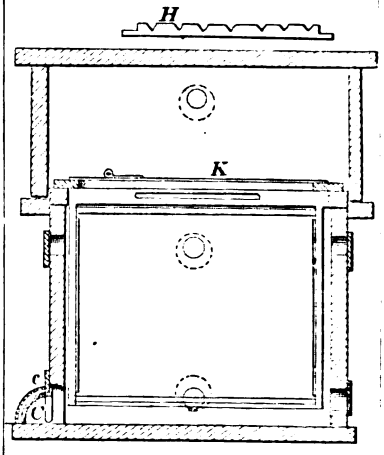

45594

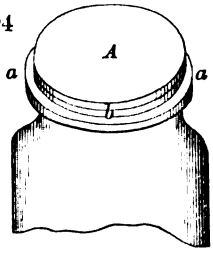

45599

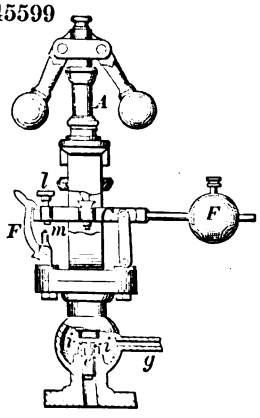

45596

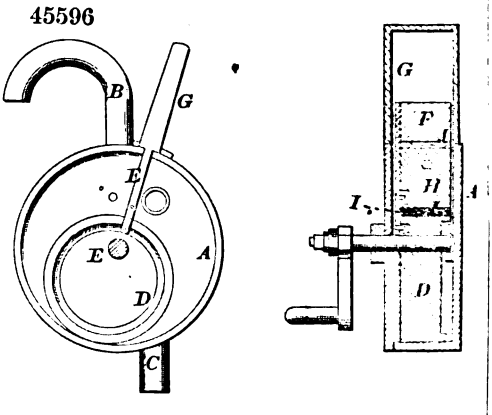

45600

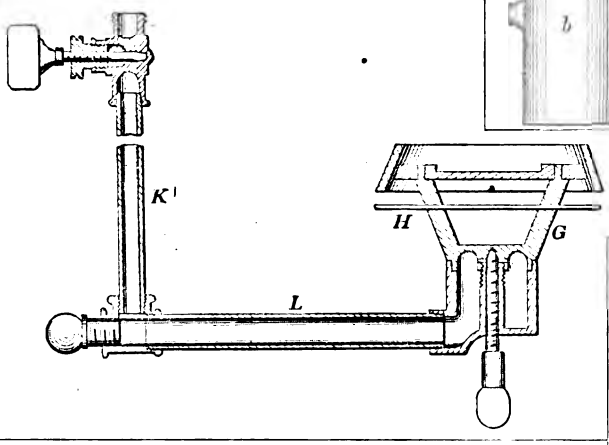

45602

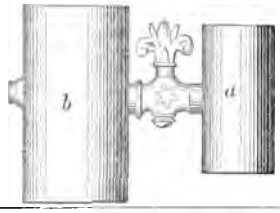

45601

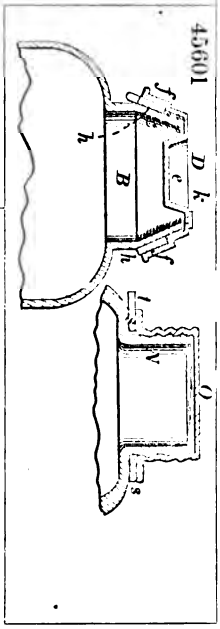

45603

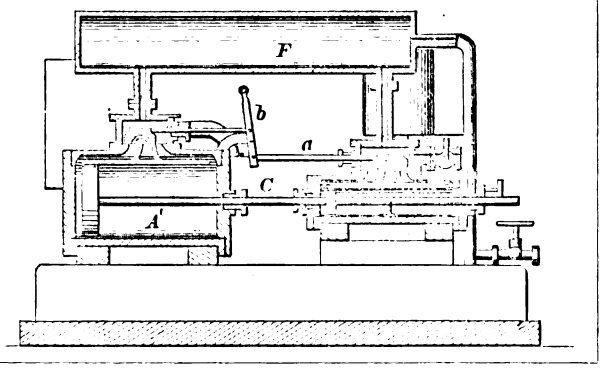

45604

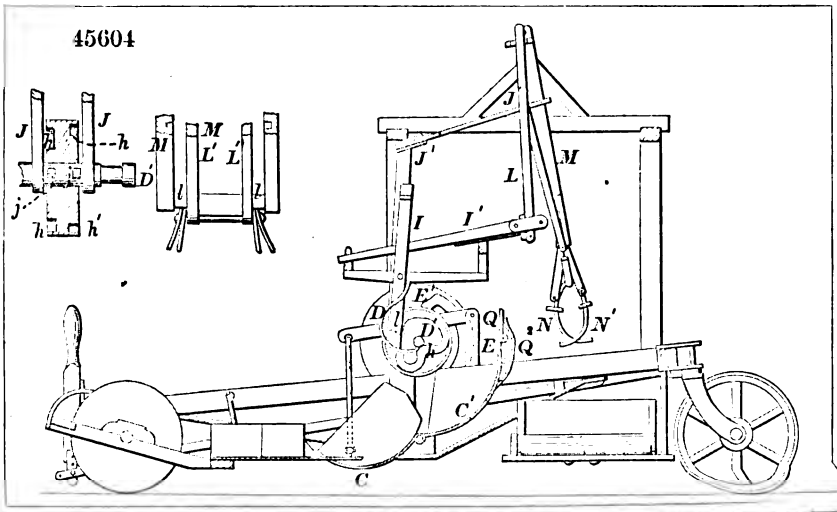

45605

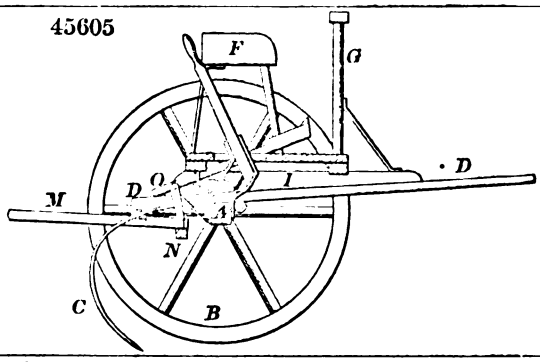

45609

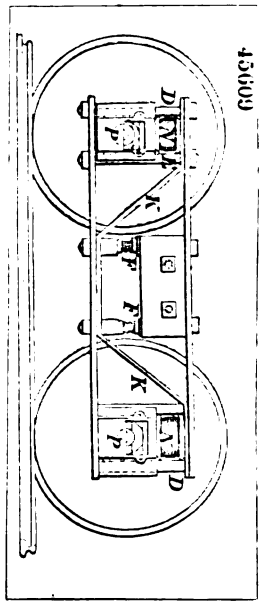

45606

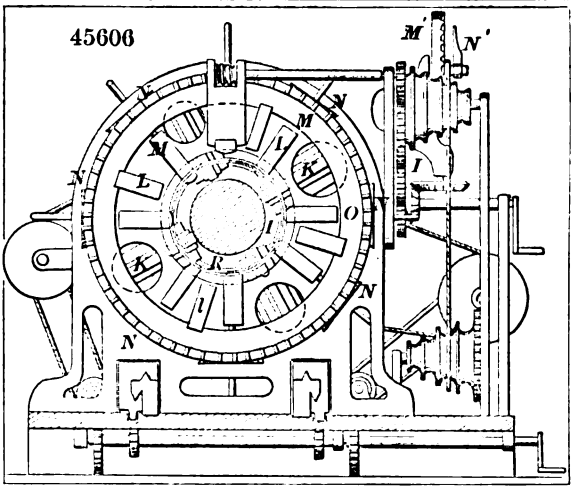

45608

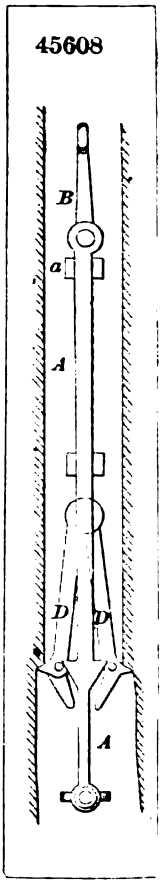

45607

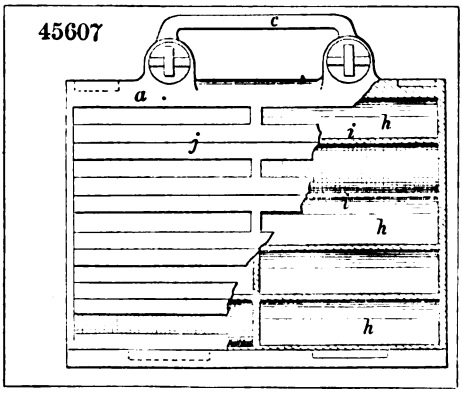

45610

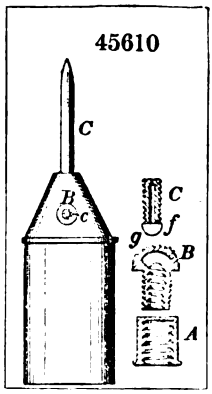

45611

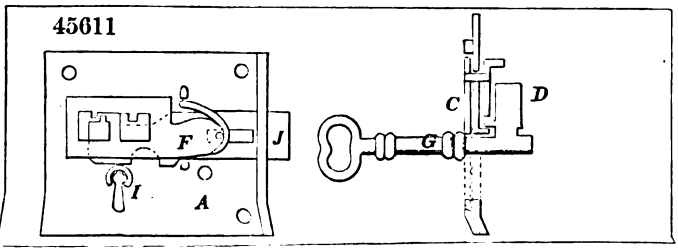

45612

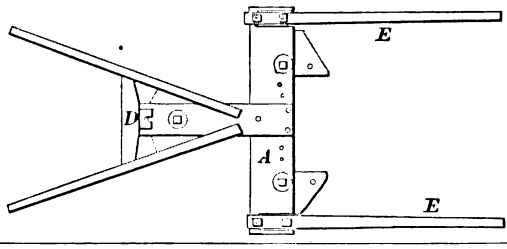

45616

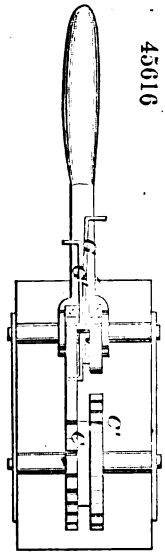

45614

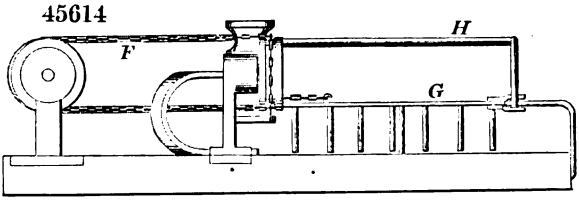

45615

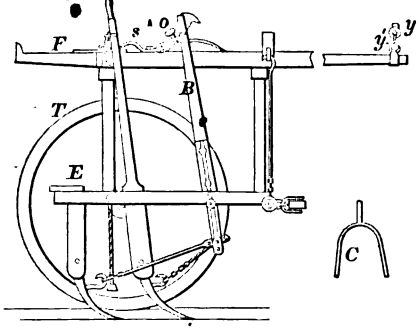

45618

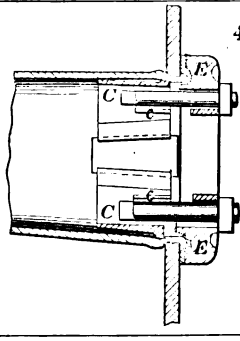

45617

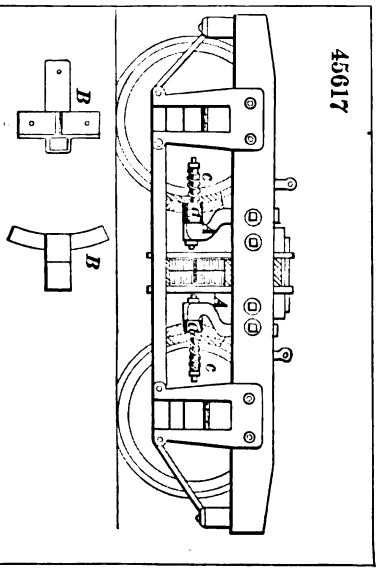

45619

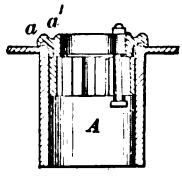

45620

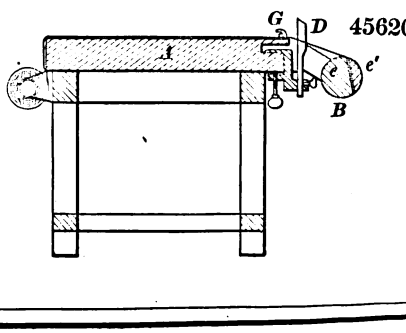

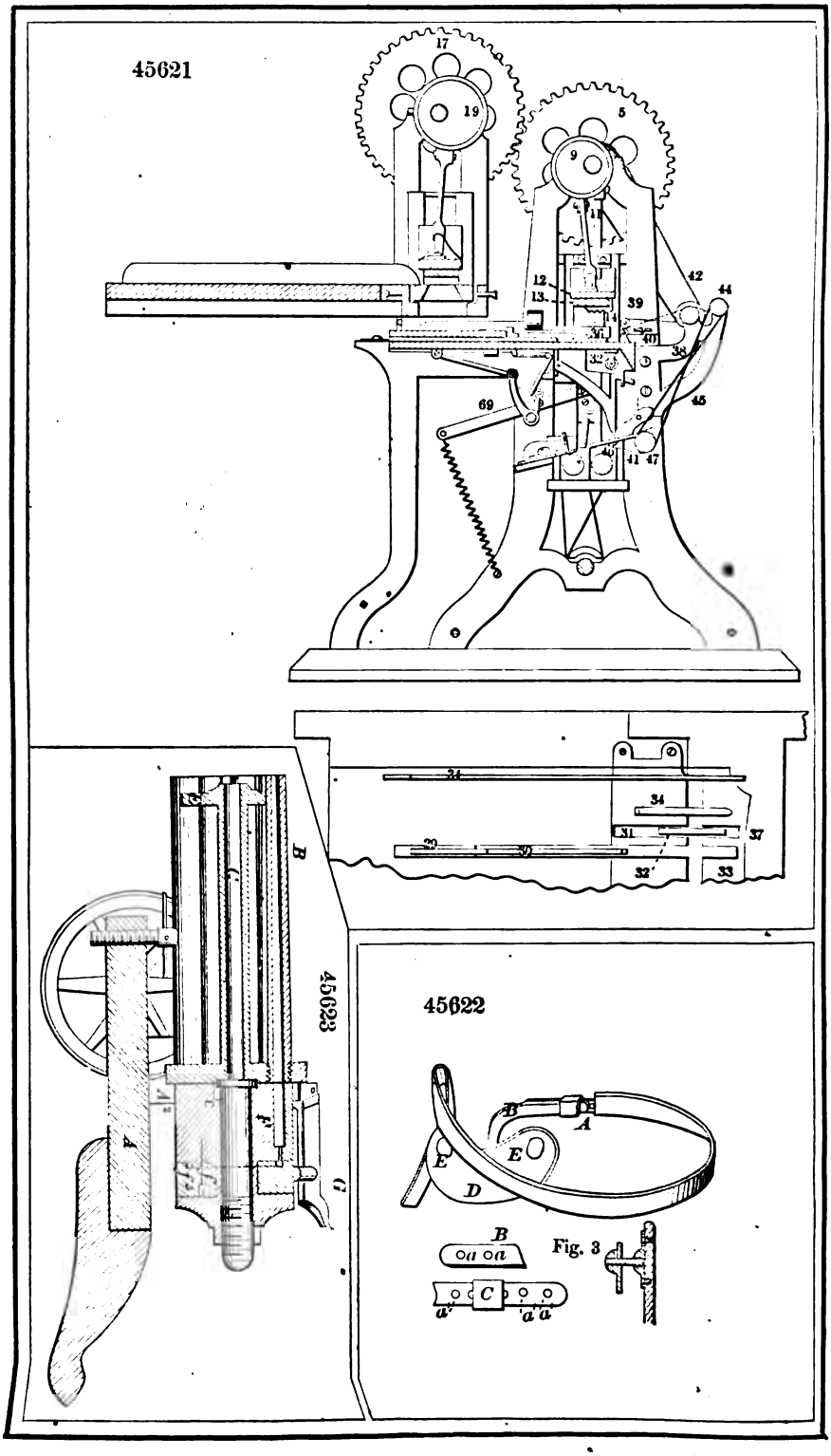
45621
17
19
5
9
11
12
13
14
39
42
44
36
40
38
32
69
45
41
47
34
31
37
30
32
33
45623
B
A
C
45622
B
A
E
E
D
B
a a
C
a
a a
Fig. 3

45624

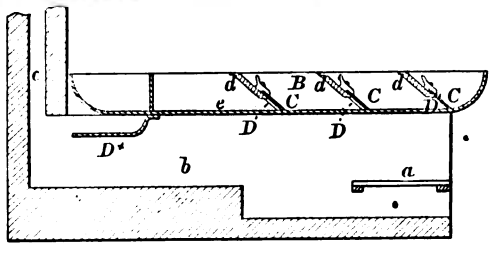

45625

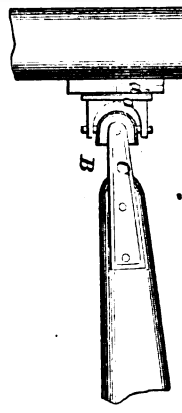

45626

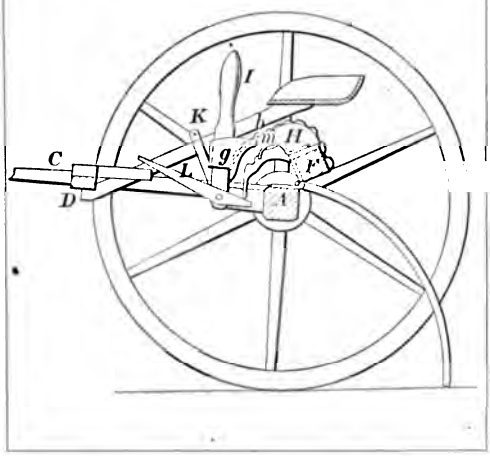

45627

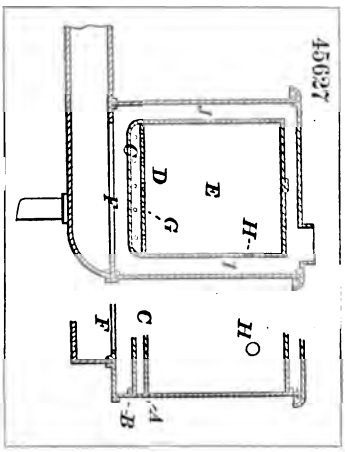

45628

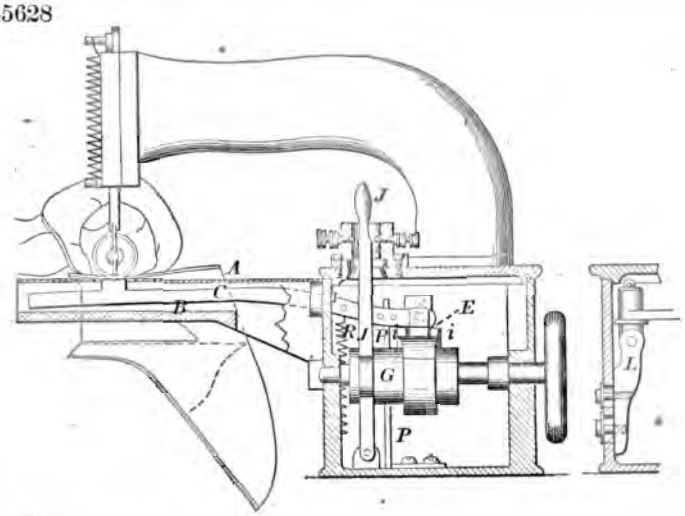

45629

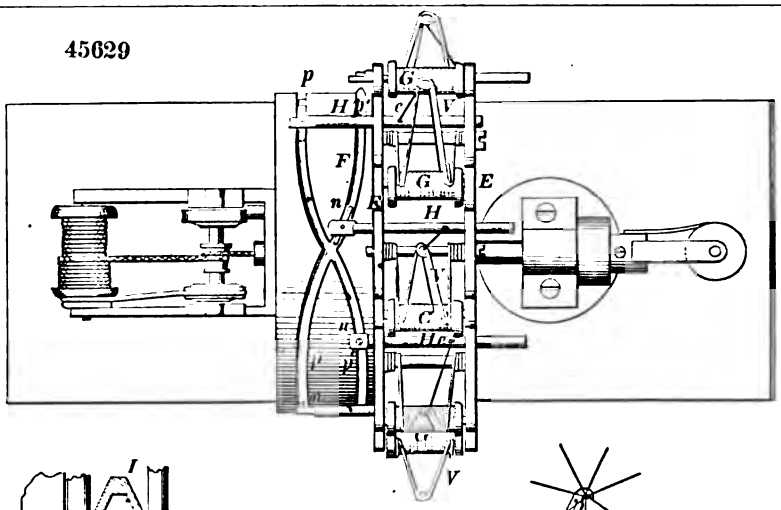

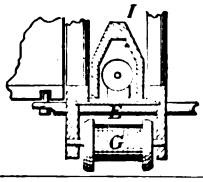

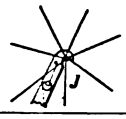

45633

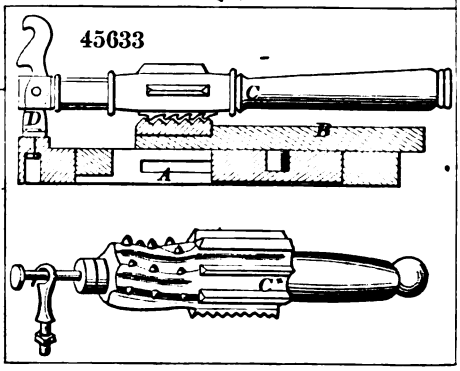

45631

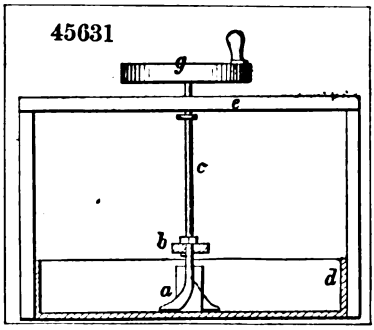

45634

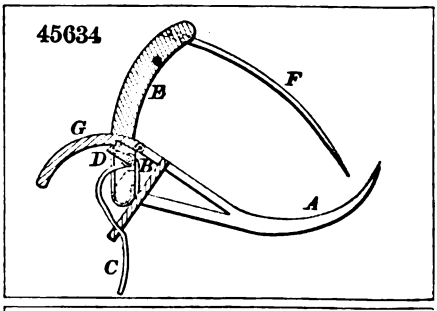

45632

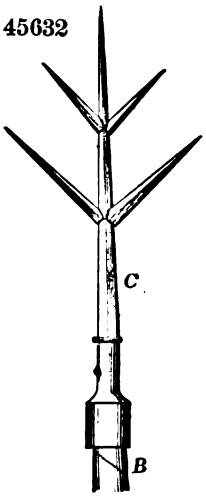

45630

45635

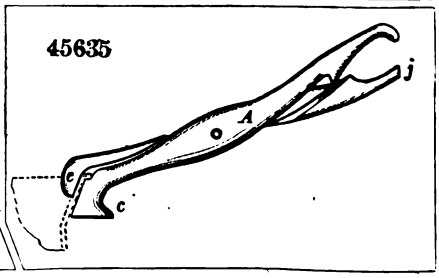

45636

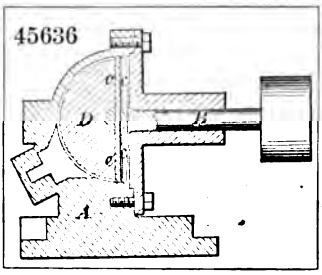

45637

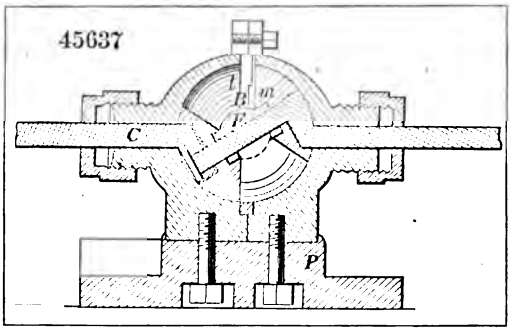

45638

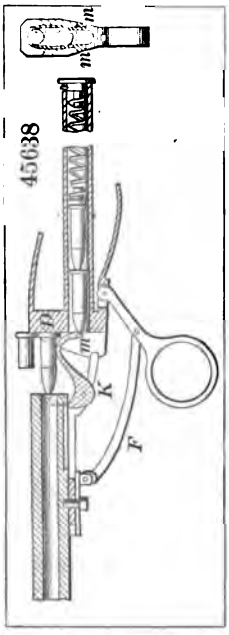

45640

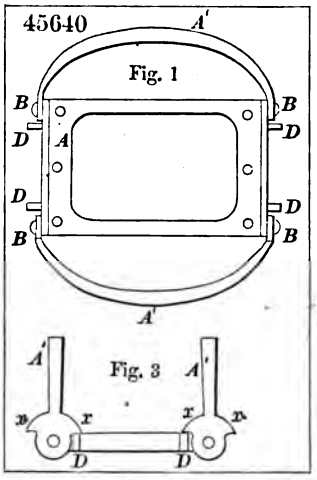

45639

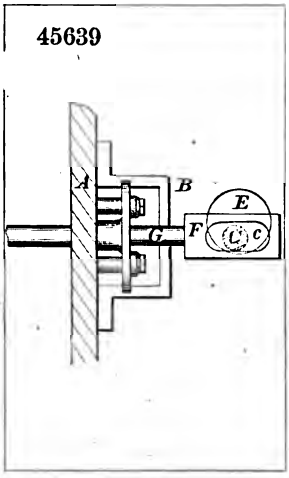

45641

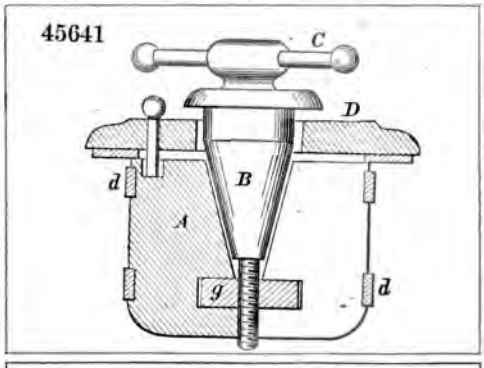

45642

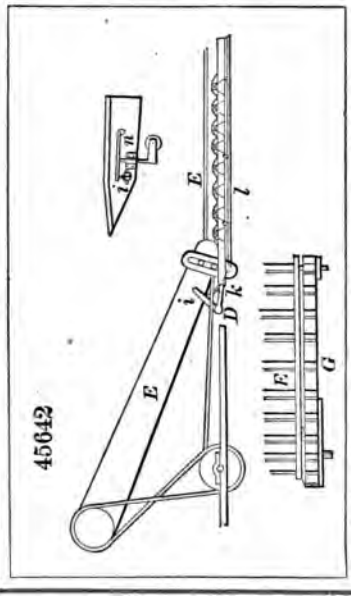

45643

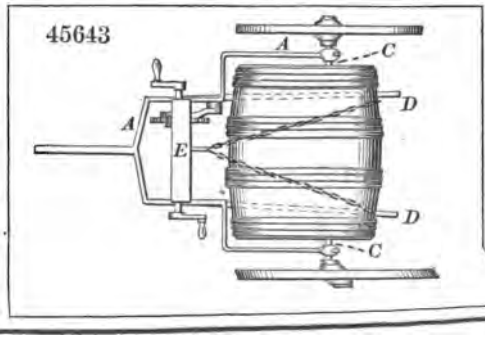

45644

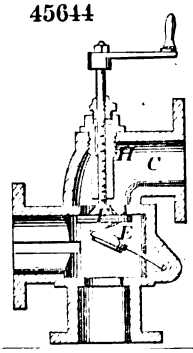

45646

45645

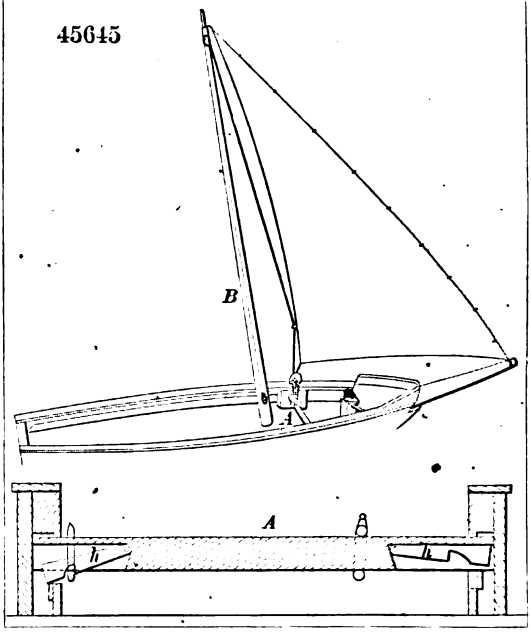

45650

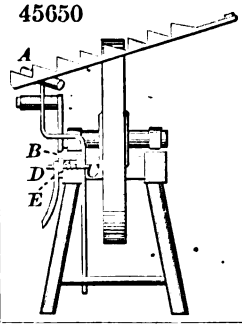

45652

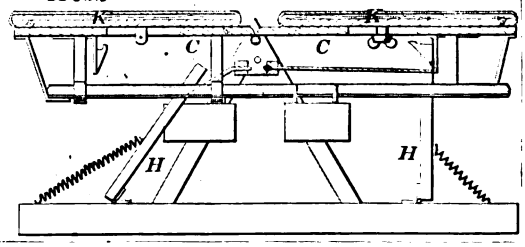

45648

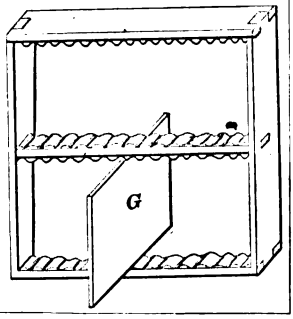

45647

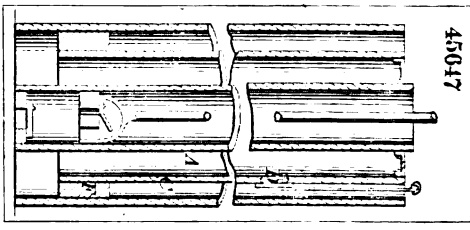

45649

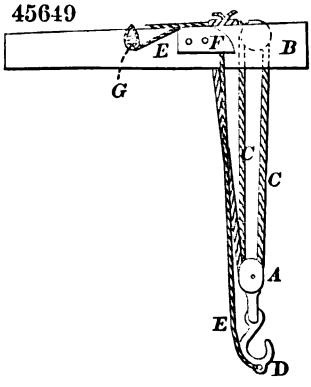

45653

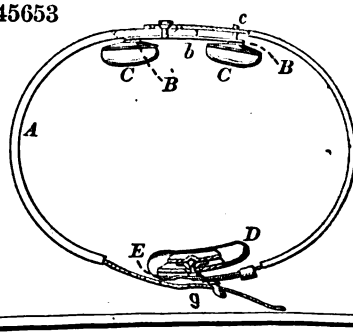

45654

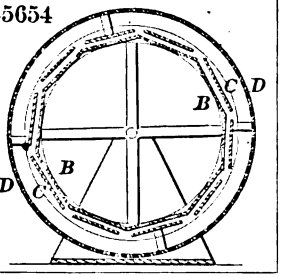

45656

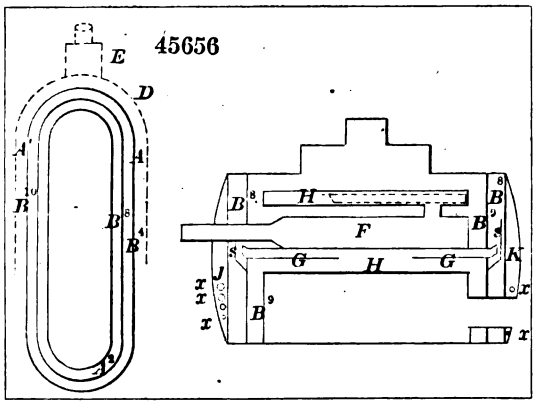

45655

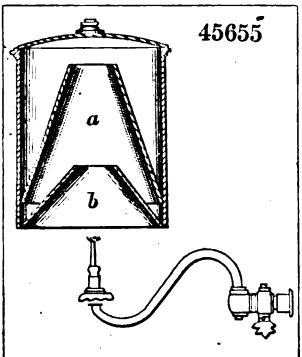

45659

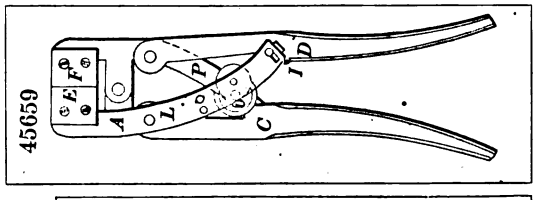

45661

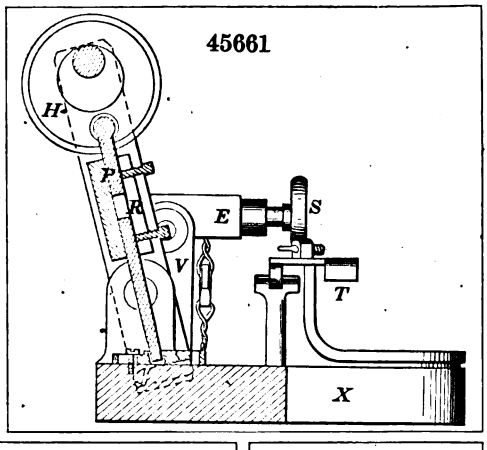

45657

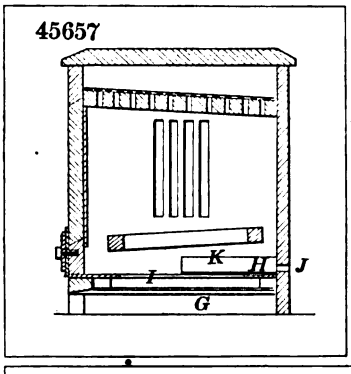

45658

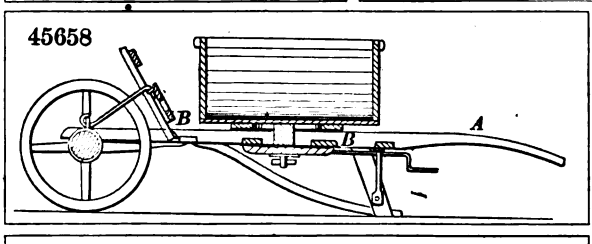

45662

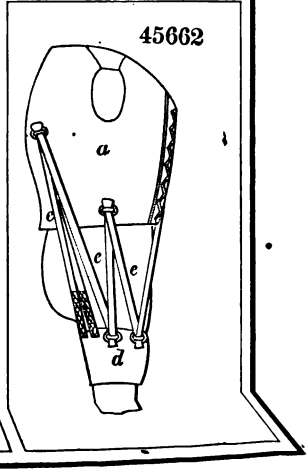

45660

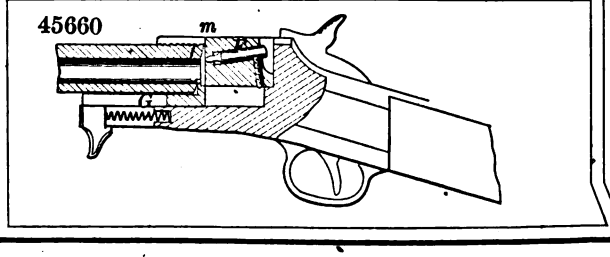

45663

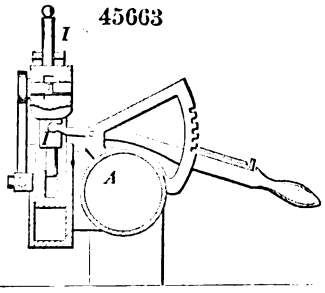

45664

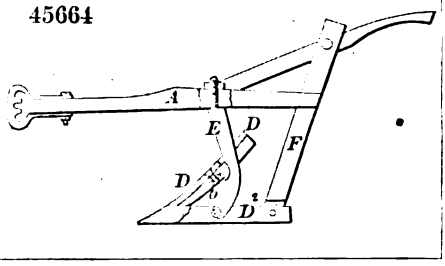

45665

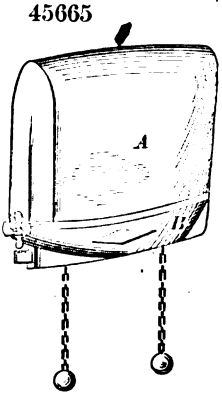

45668

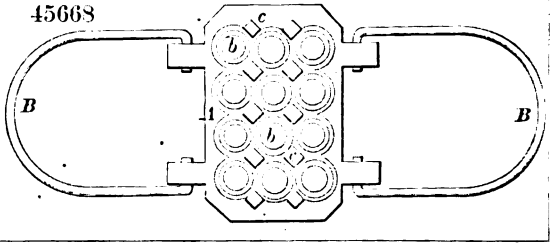

45669

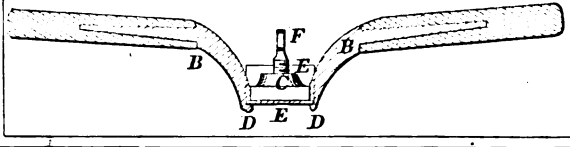

45667

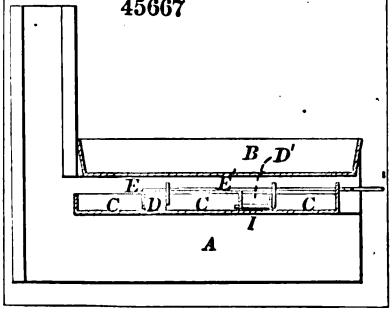

45666

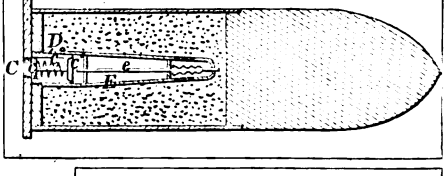

45670

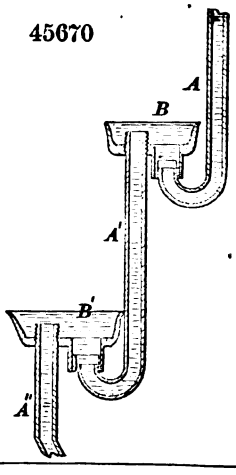

45671

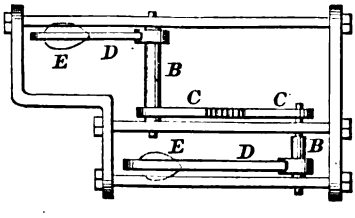

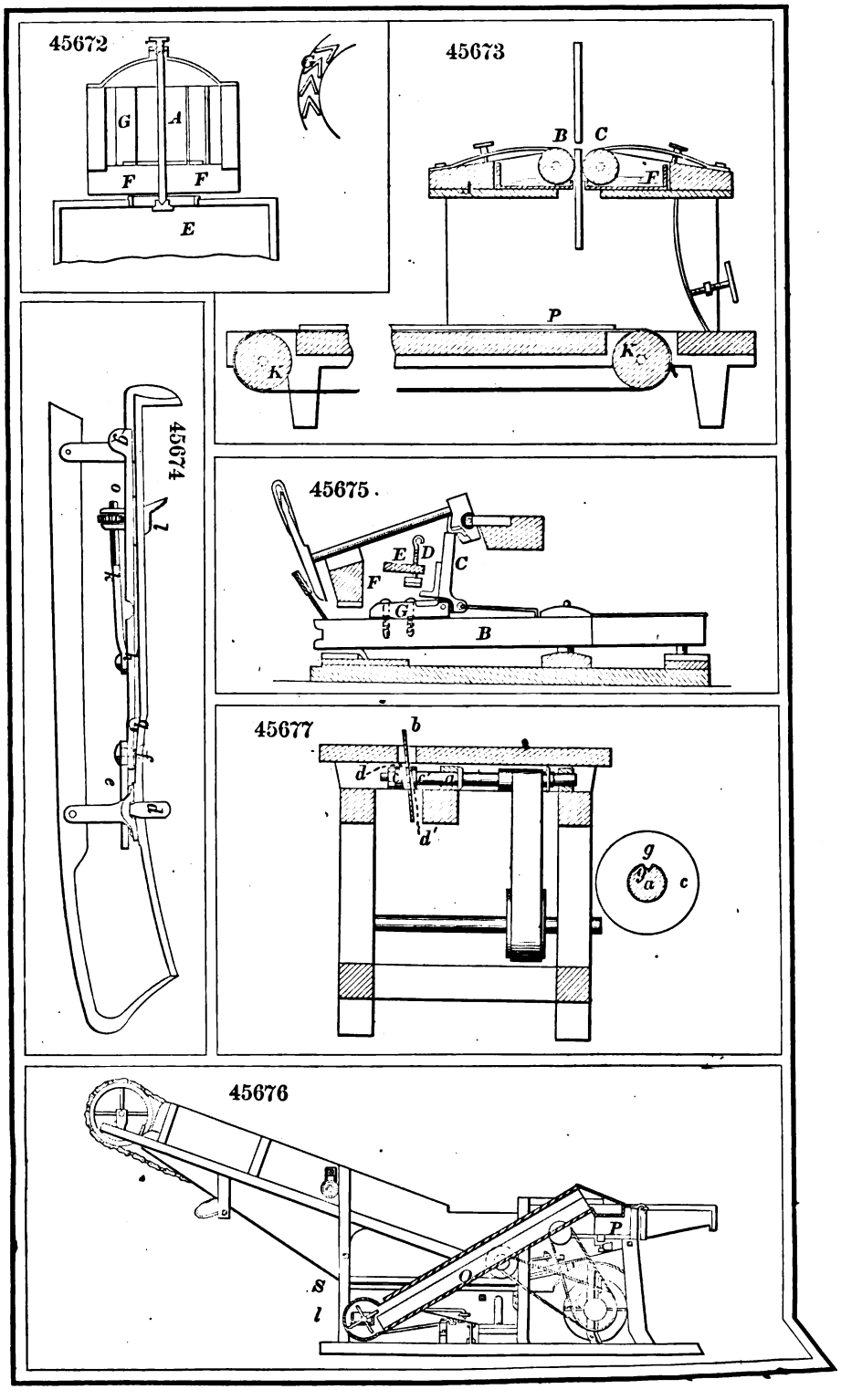
45672
G
A
F
F
E
G
45673
B
C
F
P
K
K
45674
g
o
l
k
g
f
e
d
45675
G
E
D
C
F
G
B
45677
b
d
d'
g
a
c
45676
P
S
l

45678

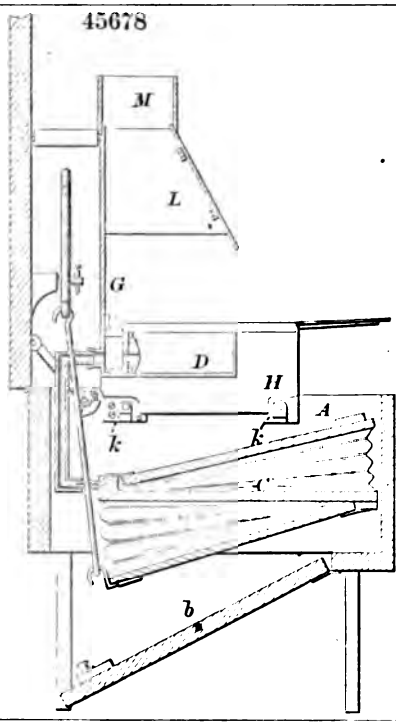

45679

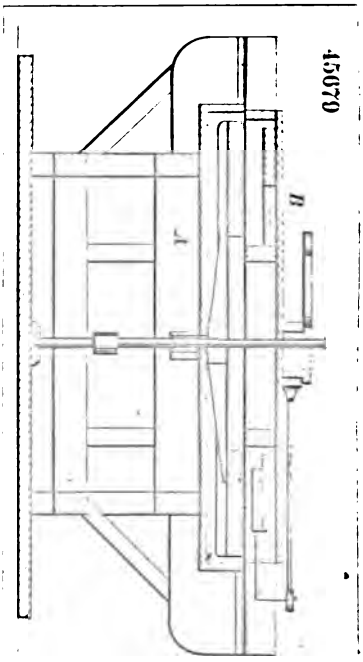

45680

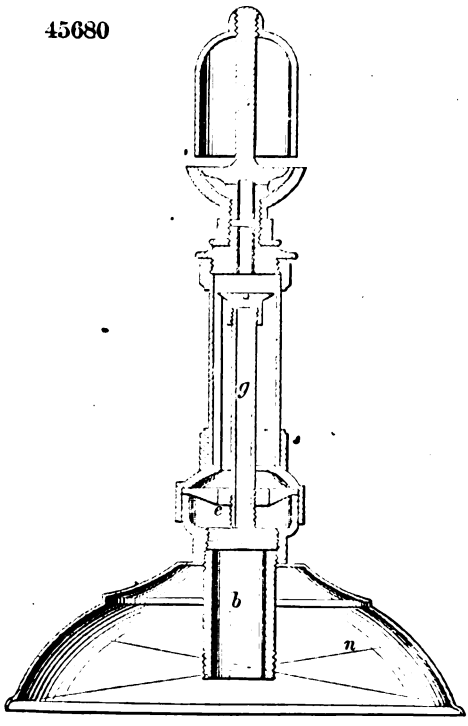

45681

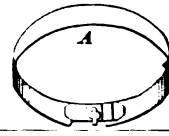

45682

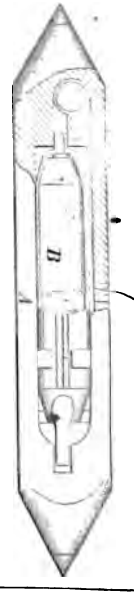

45683

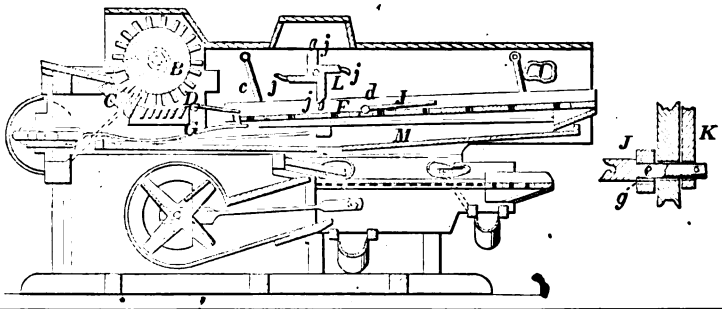
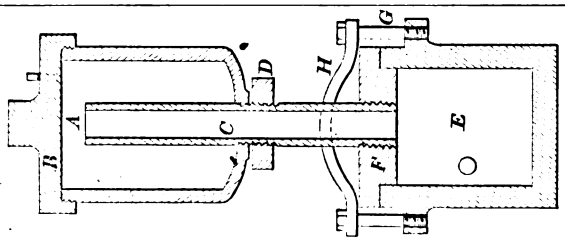
45684